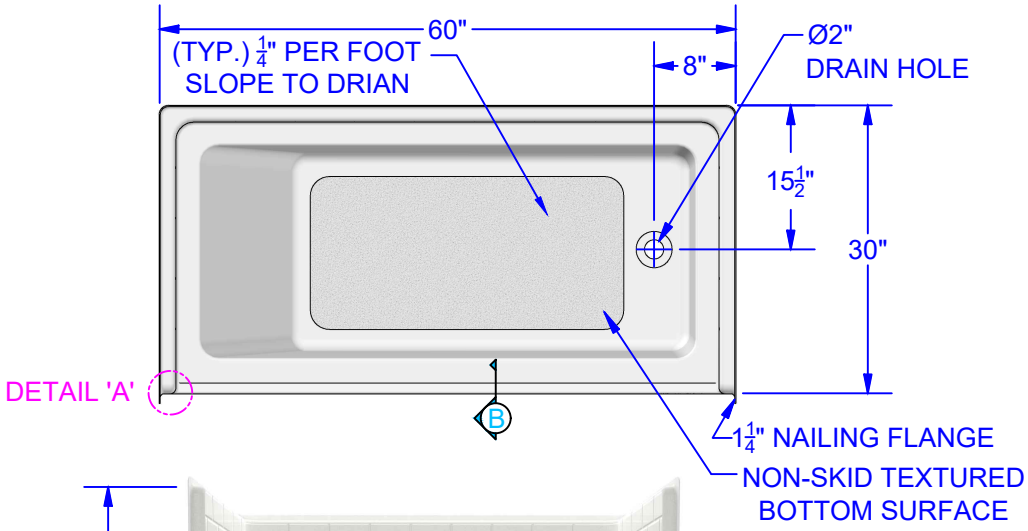



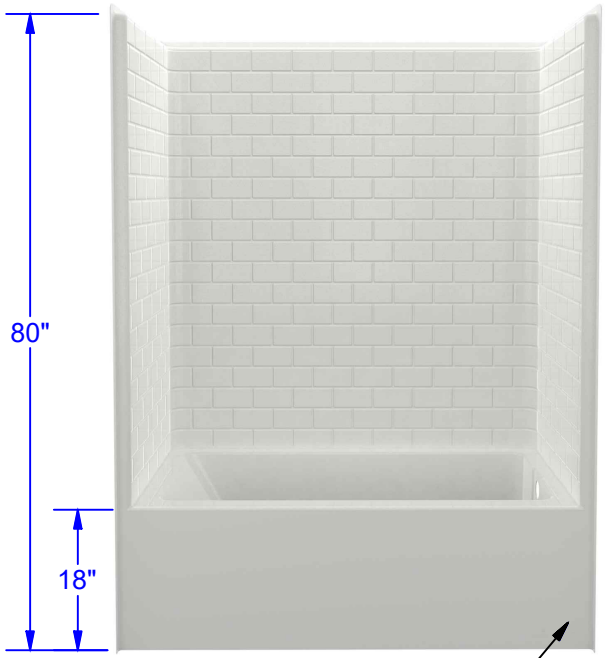

DETAIL 'D'

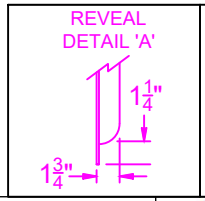

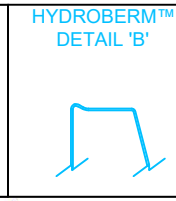

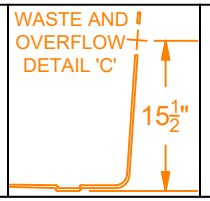

LOGO & LABEL DETAIL 'D'

FCB INC.

ET 60 - 30 RT 80 S

NOTES:

FEATURES:

- SUBWAY STYLE TILE WITH SMOOTH SURFACE APPEARANCE ON WALLS.
- NON-SKID TEXTURED BOTTOM SURFACE.
- INTEGRAL HYDROBERM FEATURE FORMS AN EFFECTIVE SPLASH GUARD ALONG THE TOP EDGE OF THE TUB/SHOWER ENCLOSURE.
- GREEN FRIENDLY TUBS AND SHOWERS: UTILIZING ADVANCED CHEMISTRY THAT YIELDS, HIGHER QUALITY, GREATER STRENGTH AND LOWER EMISSIONS.

TECHNICAL SPECS:

- GEL COAT THICKNESS .020" ± .005".
- 1ST LAMINATE .125" NOMINAL THICKNESS
- BOTTOM OF UNIT IS REINFORCED WITH WOOD TO MEET 300# LOAD TEST.
- 2ND LAMINATE COMPLETELY COVERS ALL AREAS.
- SPECIFICATIONS SUBJECT TO CHANGE WITHOUT NOTICE.

UNIT PART NUMBERS	
RIGHT HAND UNIT	ET60-30RT-80 S -R
LEFT HAND UNIT	ET60-30RT-80 S -L

THE INFORMATION CONTAINED IN THIS DRAWING IS THE SOLE PROPERTY OF FIBER CARE BATHS, INC.. ANY REPRODUCTION OR UNAUTHORIZED USE IN PART OR AS A WHOLE WITHOUT THE WRITTEN PERMISSION OF FIBER CARE BATHS, INC. IS STRICTLY PROHIBITED. PRODUCT CONFIGURATION, DIMENSIONS, STANDARD ACCESSORIES, MATERIALS COMPOSITION AND CONSTRUCTION ARE SUBJECT TO CHANGE WITHOUT NOTICE.

UNLESS OTHERWISE SPECIFIED TOLERANCES ARE AS FOLLOWS

DECIMAL: .XX =+.010 .XXX =+.005

FRACTIONAL: ±1/4"

ANGULAR: ±1/2°

CAPACITY / OPERATING LEVEL:		GAL
CAPACITY / OVERFLOW LEVEL:		GAL
APPROX. UNIT WEIGHT:		LBS
APPROX. SHIPPING WEIGHT:		LBS

FIBER CARE BATHS, INC.
9832 Yucca Rd.
Adelanto, CA 92301
Phone: 760-246-0019
Fax: 760-246-5189

TITLE:

TUB/SHOWER COMBO, 3 WALL, SUBWAY TILE

DRAWN:	SIZE:	MODEL #:	REV
TBN	A	ET60-30RT-80 S	1

DATE: 9/28/2020 SCALE: NTS STATUS: IAPMO LISTED