INSTALLATION INSTRUCTIONS

FOR PACKAGE AIR CONDITIONING UNITS

ACC SERIES 3.0, 4.0, 5.0 & 6.0 TON [10.6, 14.1, 17.6 & 21.1 KW]
60 HZ MODELS
WITH R-410A REFRIGERANT

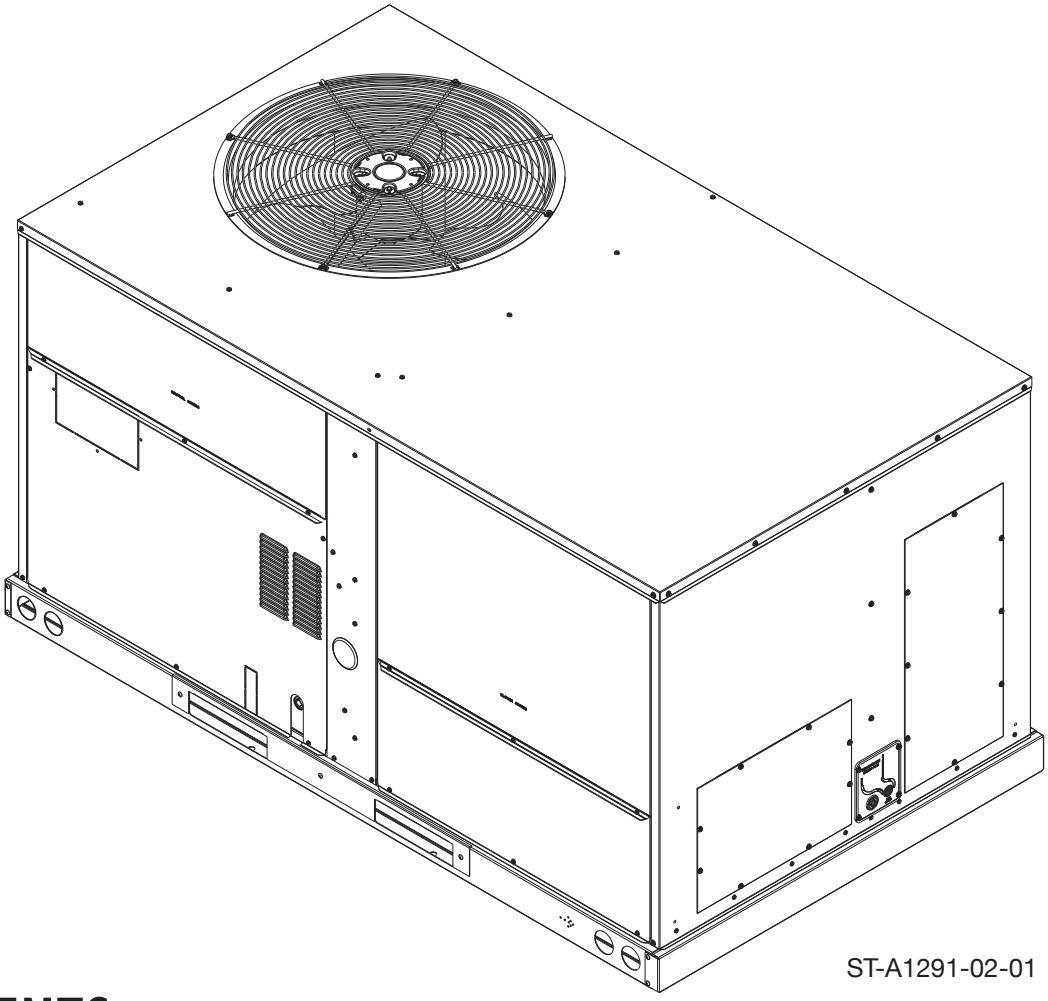

ST-A1291-02-01

CONTENTS

A. IMPORTANT SAFETY AND GENERAL INFORMATION 4

B. GENERAL SPECIFICATIONS 5

C. INSTALLATION OF THE UNIT 11

D. DUCT AND VENTING 20

E. ELECTRICAL 27

F. CONTROL / THERMOSTAT WIRING 31

H. ELECTRIC HEAT 34

J. STARTUP AND OPERATION 35

K. TEST AND BALANCE 41

M. HUMIDIDRY 42

N. DIAGNOSTICS 45

P. APPENDICES 53
- Appendix A – General Product Data 53
- Appendix B – Electrical Data 54
- Appendix C – Air Flow Performance Data 60
- Appendix D – System Performance Data 68
- Appendix E – Heater Kit Characteristics 77
- Appendix F – Refrigerant Charging Charts 82
- Appendix G – Wiring Diagrams & Schematics 91
- Appendix J – Unit Tie-Down 109

R. INFORMATION FOR THE OWNER 115

S. INSTALLATION CHECK LIST AND JOB SITE SHEET 117

DO NOT DESTROY THIS MANUAL. PLEASE READ CAREFULLY AND KEEP IN A SAFE PLACE FOR FUTURE REFERENCE BY A SERVICEMAN.

92-107218-01-04

Accredited by the RvA

ABS Quality Evaluations, Inc. Management System Certification

ANAB ACCREDITED

ISO 9001:2015

Certificate Number: 30164

AHRI CERTIFIED®
www.ahridirectory.org
Unitary Large AC
AHRI Standard 340/360
Certification applies only when the complete system is listed with AHRI.

AHRI CERTIFIED™
www.ahridirectory.org
Unitary Small AC
AHRI Standard 210/240
Certification applies only when the complete system is listed with AHRI.

c UL® US
LISTED

RECOGNIZE THIS SYMBOL AS AN INDICATION OF IMPORTANT SAFETY INFORMATION!

⚠WARNING

THESE INSTRUCTIONS ARE INTENDED AS AN AID TO QUALIFIED SERVICE PERSONNEL FOR PROPER INSTALLATION, ADJUSTMENT AND OPERATION OF THIS UNIT. READ THESE INSTRUCTIONS THOROUGHLY BEFORE ATTEMPTING INSTALLATION OR OPERATION. FAILURE TO FOLLOW THESE INSTRUCTIONS MAY RESULT IN IMPROPER INSTALLATION, ADJUSTMENT, SERVICE OR MAINTENANCE, POSSIBLY RESULTING IN FIRE, ELECTRICAL SHOCK, CARBON MONOXIDE POISONING, EXPLOSION, PROPERTY DAMAGE, PERSONAL INJURY OR DEATH.

⚠WARNING

PROPOSITION 65 WARNING: THIS PRODUCT CONTAINS CHEMICALS KNOWN TO THE STATE OF CALIFORNIA TO CAUSE CANCER, BIRTH DEFECTS OR OTHER REPRODUCTIVE HARM.

BA901-02

DO NOT DESTROY THIS MANUAL. PLEASE READ CAREFULLY AND KEEP IN A SAFE PLACE FOR FUTURE REFERENCE BY A SERVICEMAN.

CONTENTS (DETAILED)

A. IMPORTANT SAFETY AND GENERAL INFORMATION 4
A.2 Agency Performance Audit and Efficiency Testing Notice 4
A.3. Importance of a Quality Installation 4
A.4. Importance of Air Flow and Setup 4
A.5. Checking Product and Inspection 4

B. GENERAL SPECIFICATIONS 5
B.1 Safety Warnings 5
B.2. Major Components 6
B.3. Product Data Information 7

C. INSTALLATION OF THE UNIT 11
C.1. General 11
C.2. Tool and Refrigerant 11
C.3. Choosing a Location 12
C.4. Setting the Unit 14
C.5. Installing Condensate Drain 19
C.6. Final Installation Inspection 20

D. DUCT AND VENTING 20
D.1. Air Flow and Static Pressure 20
D.2. Duct Requirements and Best Practices 20
D.3. Filters 21
D.4. Economizers and Fresh Air Dampers 23
D.5. Smoke Detectors 26

E. ELECTRICAL 27
E.1. Electrical Safety Information 27
E.2. Electrical Data 29
E.3. Electrical Connections 29

F. CONTROL / THERMOSTAT WIRING 31
F.1. T-Stat field connections 31
F.2. Routing Control wiring 33
F.3. Measuring Control Voltage Loads 33

H. ELECTRIC HEAT 34

J. STARTUP AND OPERATION 35
J.1. Final Inspection 35
J.2. Turning on Power for the First Time 35
J.3. Checking and Adjusting Air Flow 36
J.4. Checking Cooling Operation 38
J.5. Checking Electric Heat Operation 40

K. TEST AND BALANCE 41
K.1. Air Flow Charts and Information 41
K.2. Air Flow Adjustments 41

M. HUMIDIDRY 42
M.1. Dehumidification System Information 42
M.2. Humidity Sensor Installation 43
M.3. Humidity Control Settings and Configuration 44

N. DIAGNOSTICS 45
N.1. Diagnostics Chart 45
N.2. Alarm Codes – Full List 46
N.3. Common Mistakes 52

P. APPENDICES 53
Appendix A – General Product Data 53
Appendix B – Electrical Data 54
Appendix C – Air Flow Performance Data 60
Appendix D – System Performance Data 68
Appendix E – Heater Kit Characteristics 77
Appendix F – Refrigerant Charging Charts 82
Appendix G – Wiring Diagrams & Schematics 91
Appendix J – Unit Tie-Down 109

R. INFORMATION FOR THE OWNER 115

S. INSTALLATION CHECK LIST AND JOB SITE SHEET 117

A. IMPORTANT SAFETY AND GENERAL INFORMATION

A.1 Introduction

This booklet contains the installation and operating instructions for your 3 ton, 4 ton, 5 ton, or 6 ton packaged cooling unit. There are some precautions that should be taken to ensure proper operation. Improper installation can result in unsatisfactory operation or dangerous conditions.

Read this booklet and any instructions packaged with separate equipment required to make up the system prior to installation. Give this booklet to the owner and explain its provisions. The owner should retain this booklet for future reference.

⚠WARNING: The manufacturer's warranty does not cover any damage or defect to the air conditioner caused by the attachment or use of any components, accessories or devices (other than those authorized by the manufacturer) into, onto or in conjunction with the air conditioner.

You should be aware that the use of unauthorized components, accessories or devices may adversely affect the operation of the air conditioner and may also endanger life and property. The manufacturer disclaims any responsibility for such loss or injury resulting from the use of such unauthorized components, accessories or devices.

A.2 Agency Performance Audit and Efficiency Testing Notice

NOTICE: BREAK-IN PERIOD

Prior to agency testing, run the compressor for 16 hours at 115°f outdoor ambient temperature and 80° dry bulb / 75° wet bulb indoor ambient temperature.

NOTICE: EFFICIENCY TESTING NOTICE

For purposes of verifying or testing efficiency ratings, the test procedure in Title 10 Appendix M to Subpart B of Part 430 (Uniform Test Method for Measuring the Energy Consumption of Central Air Conditioners and Heat Pumps), and the clarifying provisions provided in the standards listed below that were applicable at the date of manufacture should be used for test set up and performance.

SETUP

- ASHRAE 37 - 2009 (RA 2019)

PERFORMANCE:

- ANSI/ASHRAE 90.1 - 2016
- ANSI/ASHRAE 103 (2017)
- AHRI Operations for Unitary Small AC Equipment 210/240 (2017) for 3-5T
- AHRI Operations for Unitary Large AC Equipment 340/360 (2015) for 6T

SAFETY

UL 1995 5th Edition

A.3. Importance of a Quality Installation

Optimal system performance and longevity depend upon a quality and proper installation. Failure to properly setup and commission this unit could result in undesirable operation and subsequent faults and potential failures.

Carefully follow all guidelines listed in the manual and industry best practices. Conform to all local code requirements. Contact your local technical representative with any questions or concerns.

A.4. Importance of Air Flow and Setup

Optimal system performance is also dependent upon having the ideal airflow across the condensing and evaporating coils, and upon matching the charge weight to the manufacturer's spec for the unit. Improper or restricted air flow, and incorrect charge weight, will hinder the performance of the unit. Please refer to the manufacturer's recommended clearances for setting the unit and the included guide for setting air flow. Refer to the rating plate for the charge weight.

A.5. Checking Product and Inspection

Upon receiving the unit, inspect it for any damage from shipment. Claims for damage, either shipping or concealed, should be filed immediately with the shipping company. IMPORTANT: Check the unit model number, heating size, electrical characteristics, and accessories to determine if they are correct.

B. GENERAL SPECIFICATIONS

B.1 Safety Warnings

⚠WARNING: The manufacturer's warranty does not cover any damage or defect to the air conditioner caused by the attachment or use of any components, accessories or devices (other than those authorized by the manufacturer) into, onto or in conjunction with the air conditioner. You should be aware that the use of unauthorized components, accessories or devices may adversely affect the operation of the air conditioner and may also endanger life and property. The manufacturer disclaims any responsibility for such loss or injury resulting from the use of such unauthorized components, accessories or devices.

⚠WARNING: Disconnect all power to the unit before starting maintenance. Failure to do so can result in severe electrical shock or death

⚠CAUTION: R-410A systems operate at higher pressures than R-22 systems. Do not use R-22 service equipment or components on R-410A equipment.

⚠WARNING: do not, under any circumstances, connect return ductwork to any other heat producing device such as a fireplace insert, stove, etc. Unauthorized use of such devices may result in fire, carbon monoxide poisoning, explosion, property damage, severe personal injury or death.

⚠WARNING: The unit must be permanently grounded. A grounding lug is provided in the electric heat access area for a ground wire.

Failure to ground this unit can result in fire or electrical shock causing property damage, severe personal injury or death.

⚠WARNING: Only electric heater kits supplied by this manufacturer as described in this publication have been designed, tested, and

Evaluated for use with this unit. Use of any other manufactured electric heaters installed within this unit may cause hazardous conditions resulting in property damage, fire, bodily injury or death.

B. GENERAL SPECIFICATIONS

B.2. Major Components

The unit includes a hermetically-sealed refrigerating system consisting of a scroll compressor, condenser coil, evaporator coil with TXV, a circulation air blower, a condenser fan, and all necessary internal electrical wiring.

The cooling system of these units is factory evacuated, charged, and performance tested. Refrigerant amount and type are indicated on rating plate.

B.3. Product Data Information

B.3.1. Dimensional Information

IMPORTANT: This unit must be mounted level in both directions to allow water to drain from the condenser section and condensate pan.

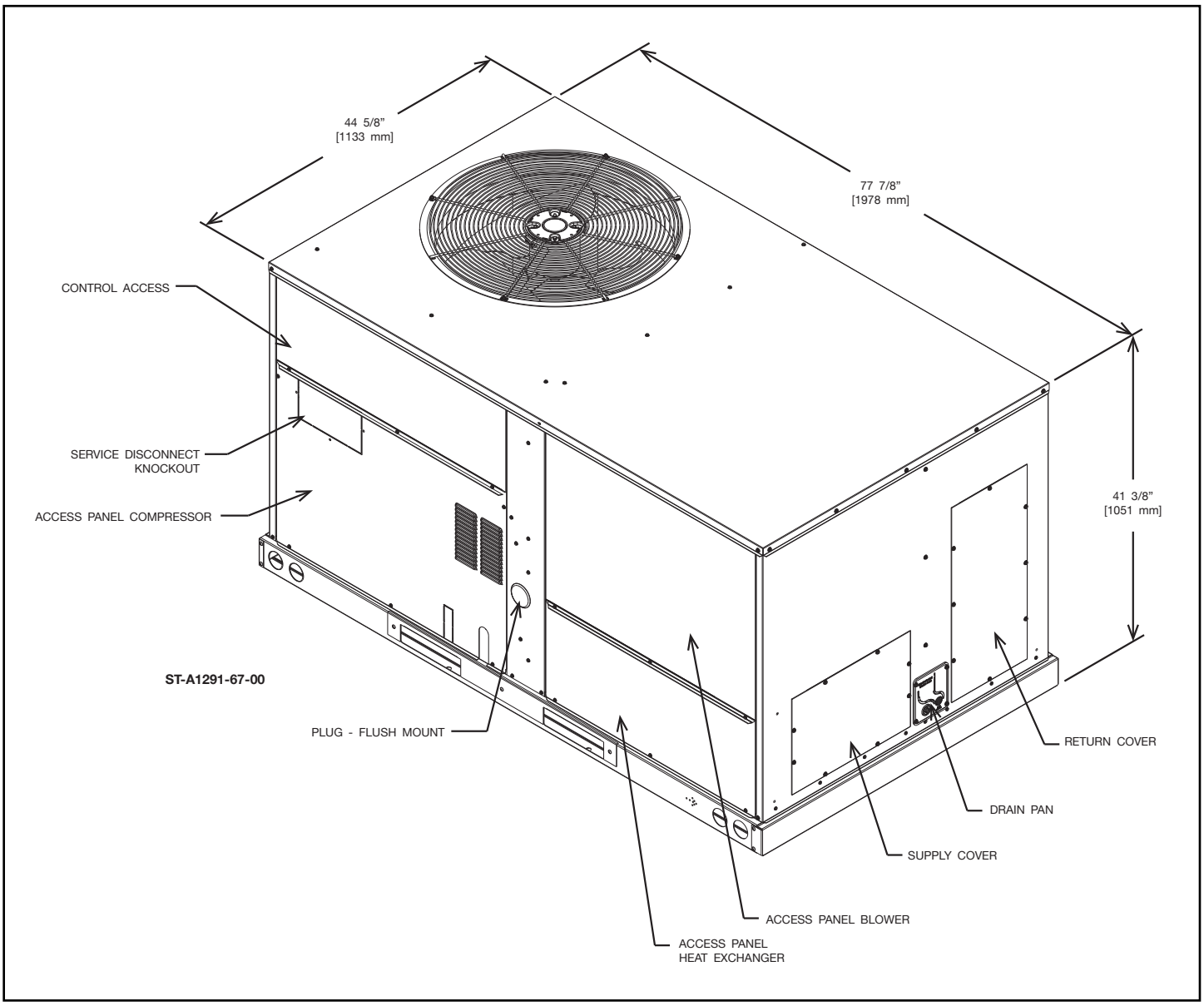

B.3. Product Data Information

B.3.1. Dimensional Information (Cont.)

IMPORTANT: This unit must be mounted level in both directions to allow water to drain from the condenser section and condensate pan.

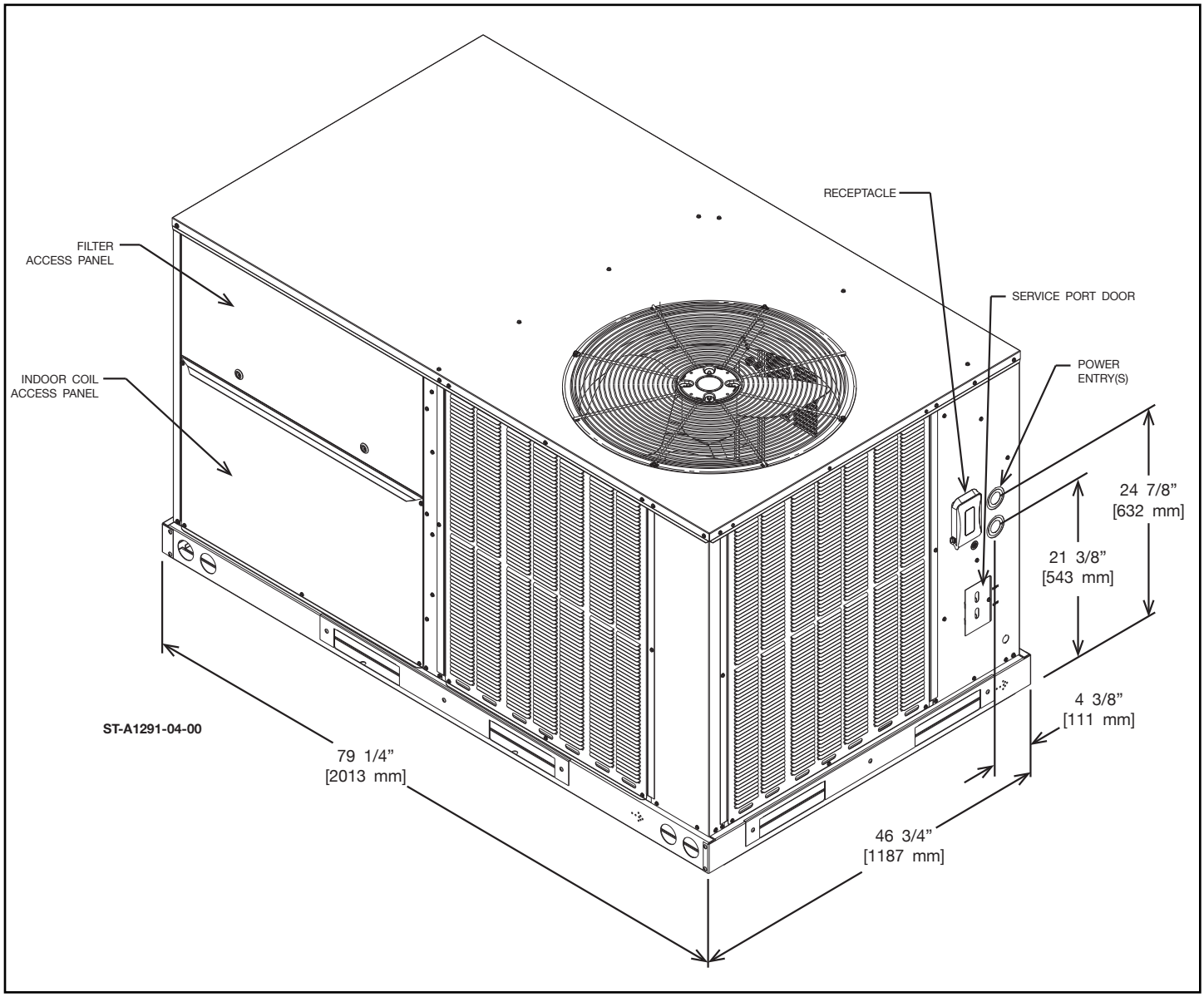

B.3.2. Product Specifications

The packaged Air Conditioning rooftop unit is available with 10, 15, 20, or 24 KW electric heat input (either factory installed or field installed). Cooling capacity is 3.0, 4.0, 5.0, and 6.0 nominal tons. Units are convertible from downflow supply/return to sideflow supply/return by relocation of supply/return cover panels. See section ***C.3.5. Cover Panel Installation/ Conversion Procedure*** for more details.

The units are weatherized for mounting outside of the building.

⚠WARNING: Units are not design certified to be installed inside the structure. Doing so can cause inadequate unit performance as well as property damage.

B. GENERAL SPECIFICATIONS

B.3. Product Data Information

B.3.3. General Data

*See **Appendix A** towards the end of this manual for General Data.*

B.3.4. Electrical Data Reference

*See **Appendix B** towards the end of this manual for Electrical Data.*

B.3.5. Air Flow Performance Data

*See **Appendix C** towards the end of this manual for Air Flow Performance Data.*

B.3.6. Supply and Return Duct Dimensions

Figure B.3.6. - A: Supply And Return Dimensions For Downflow Applications (Bottom View Looking Up)

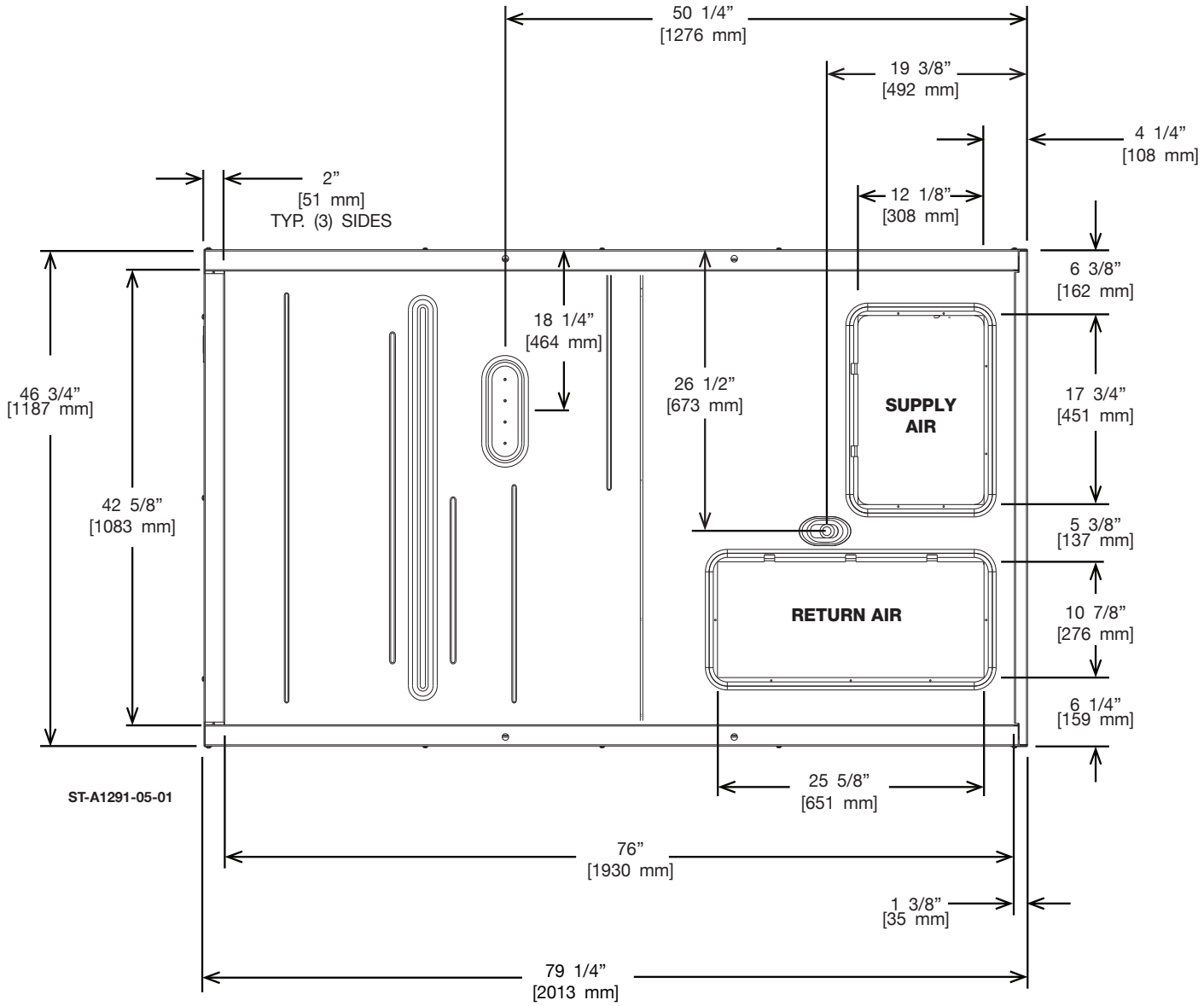

B.3.6. Supply and Return Duct Dimensions

Figure B.3.6. - B: Supply And Return Dimensions For Horizontal Applications

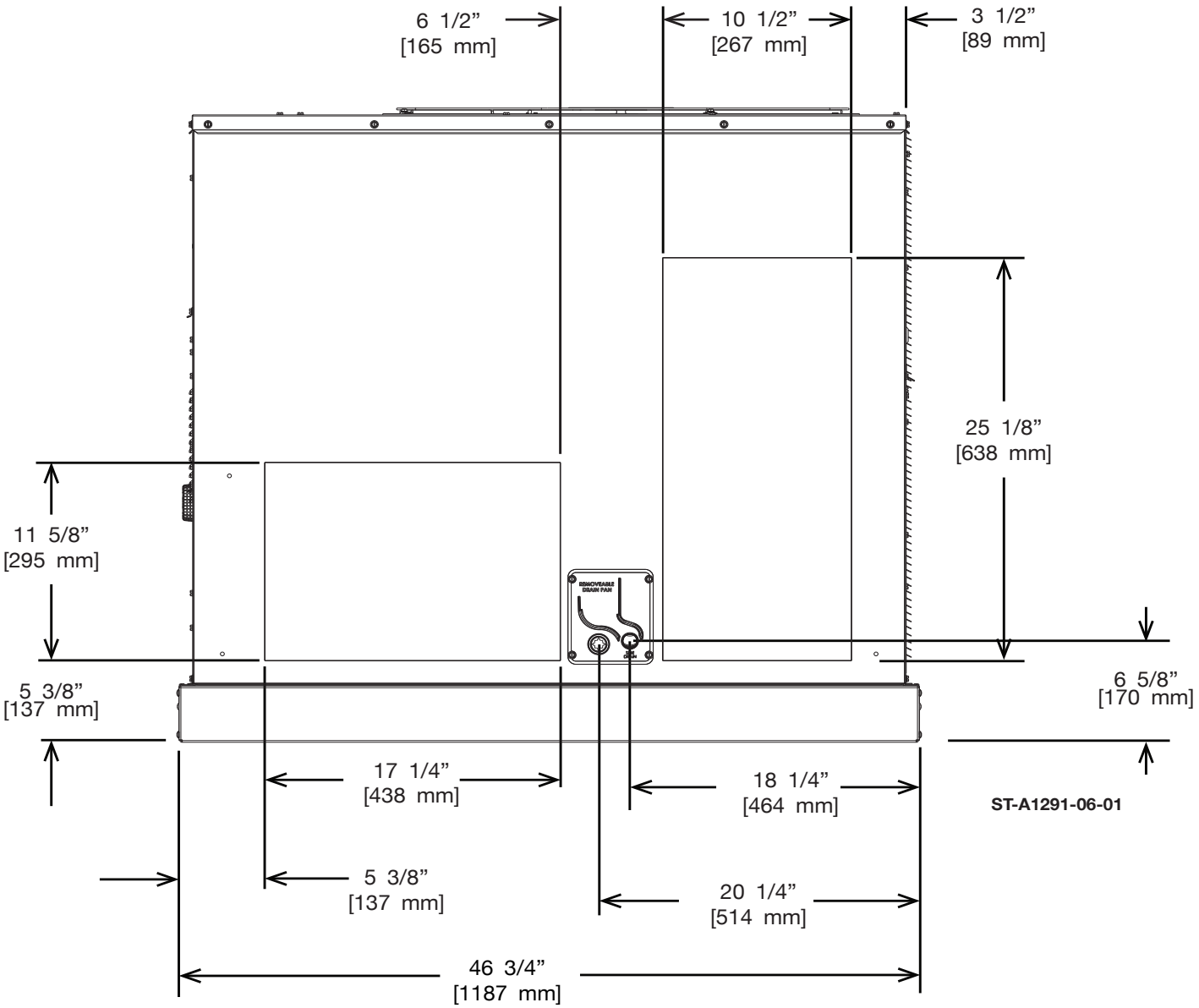

B. GENERAL SPECIFICATIONS

B.3. Product Data Information

B.3.7. Curb Dimensions

NOTE: See section C.3.3. Rooftop Installation for more information for installing the unit on a curb.

Figure B.3.7. – A: Roofcurb Complete Assembly

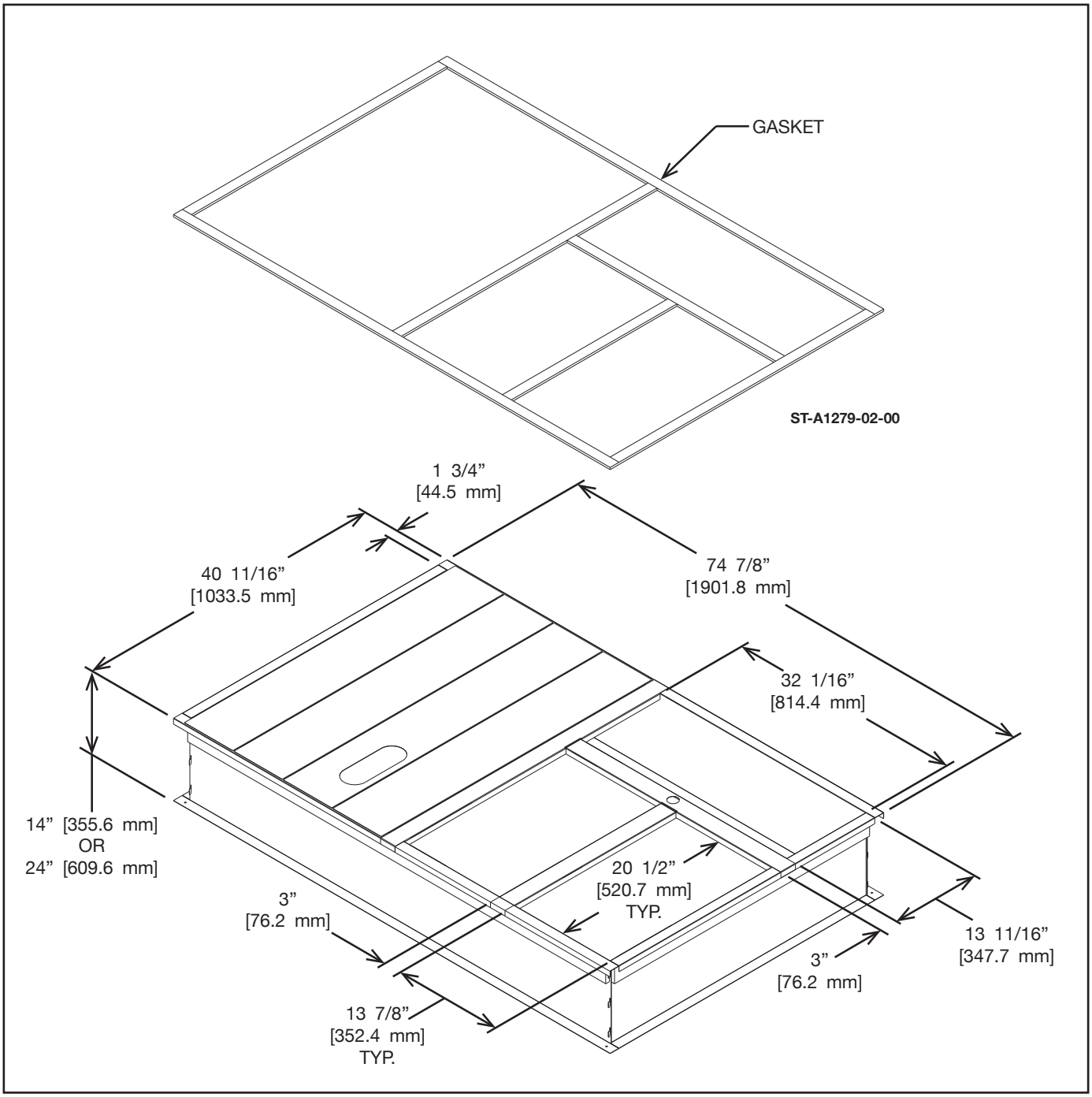

C. INSTALLATION OF THE UNIT

C.1. General

C.1.1. Installation

Install this unit in accordance with local and national standards. Any and all work must be done by authorized personnel.

C.1.2. Pre-Installation Checkpoints

Before attempting any installation, carefully consider the following points:

- Structural strength of supporting members (Rooftop Installation)
- Clearances and provision for servicing
- Power supply and wiring
- Air duct connections and sizing
- Drain facilities and connections
- Location for minimum noise and vibration - away from bedroom windows

C.2. Tool and Refrigerant

C.2.1. Tools Required for Installing and Servicing R-410A Models

Manifold Sets:

- Up to 800 PSIG High Side
- Up to 250 PSIG Low Side
- 550 PSIG Low Side Retard

Manifold Hoses:

- Service Pressure Rating of 800 PSIG
- Zero-loss fittings

Recovery Cylinders:

- 400 PSIG Pressure Rating

Dept. of Transportation

- 4BA400 or BW400

C.2.2. Specifications of R-410A

All units are factory charged with R-410a Refrigerant.

Combustibility: At pressures above 1 atmosphere, mixture of R-410A and air can become combustible. **R-410A and air should never be mixed in tanks or supply lines, or be allowed to accumulate in storage tanks. Leak checking should never be done with a mixture of R-410A and air.** Leak checking can be performed safely with nitrogen or a mixture of R-410A and nitrogen.

C.2.3. Quick Reference Guide for R-410A

Ensure that servicing equipment is designed to operate with R-410A.

- R-410A refrigerant cylinders are pink.
- R-410A, as with other HFC's is only compatible with POE oils.
- Vacuum pumps will not remove moisture from POE oil.
- R-410A systems are to be charged with liquid refrigerants.
- Do not install a suction line filter drier in the liquid line.
- A liquid line filter drier is standard on every unit.
- Desiccant (drying agent) must be compatible for POE oils and R-410A.

C. INSTALLATION OF THE UNIT

C.2. Tool and Refrigerant

C.2.4. Evaporator Coil/TXV

The thermostatic expansion valve is specifically designed to operate with R- 410A. **The existing evaporator must be replaced with the factory specified TXV evaporator specifically designed for R-410A.**

C.3. Choosing a Location

C.3.1.Unit Location: Allowable Clearances and Operational Issues

The unit location must comply with the allowable clearances listed in ***Figure C.3.1. - A.*** Failure to comply with the recommended clearances may result in operational issues such as decreased capacity, restricted condenser airflow, and condenser motor fatigue.

Figure C.3.1. - A: Allowable Clearances

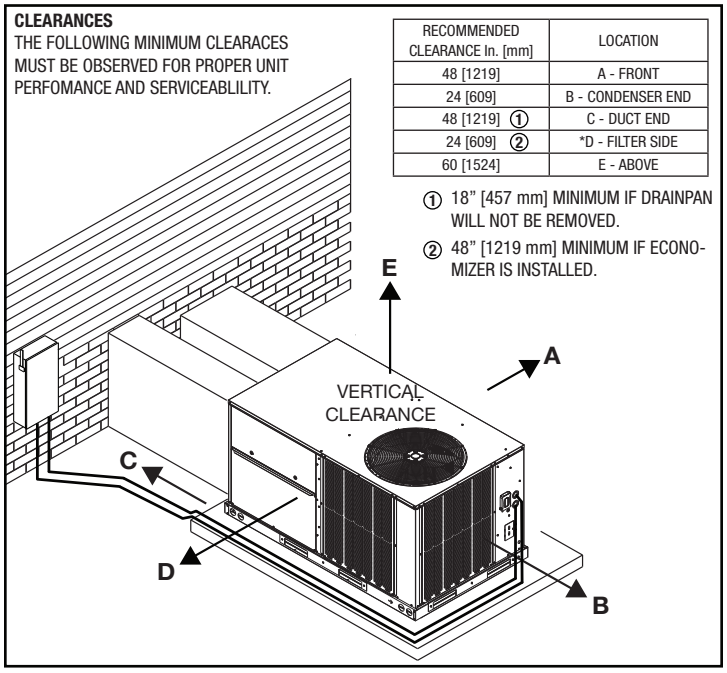

C.3.2. Outside Installation

⚠WARNING: These units are designed certified for outdoor installation only. Installation inside any part of a structure can result in inadequate unit performance as well as property damage.

1. Select a location where external water drainage cannot collect around unit.

2. Provide a level slab sufficiently high enough above grade to prevent surface water from entering the unit

3. Locate the unit to provide proper access for inspection and servicing as shown in ***Figure C.3.1. - A.***

4. Locate unit where operating sounds will not disturb owner or neighbors.

5. Locate unit so roof runoff water does not pour directly on the unit. Provide gutter or other shielding at roof level. Do not locate unit in an area where excessive snow drifting may occur or accumulate.

6. Where snowfall is anticipated, the height of the unit above the ground level must be considered. Mount unit high enough to be above anticipated maximum area snowfall.

7. Select an area which will keep the areas of the vent, air intake, and A/C condenser fins free and clear of obstructions such as weeds, shrubs, vines, snow, etc. Inform the user accordingly.

C.3.3. Rooftop Installation

1. Before locating the unit on the roof, make sure that the roof structure is adequate to support the weight involved. (See Electrical & Physical Tables in this manual.) **THIS IS VERY IMPORTANT AND IS THE INSTALLER'S RESPONSIBILITY.**

2. For rigging and roofcurb details, see section ***C.4.3.***

3. The location of the unit on the roof should be such as to provide proper access for inspection and servicing.

IMPORTANT: *If unit will not be put into service immediately, block off supply and return air openings to prevent excessive condensation.*

C.3.4. Corrosive Environments

The metal parts of this unit may be subject to rust or deterioration in adverse environmental conditions. This oxidation could shorten the equipment's useful life. Salt spray, fog or mist in seacoast areas, sulphur or chlorine from lawn watering systems, and various chemical contaminants from industries such as paper mills and petroleum refineries are especially corrosive.

If the unit is to be installed in an area where contaminants are likely to be a problem, give special attention to the equipment location and exposure.

1. Avoid having lawn sprinkler heads spray directly on the unit cabinet.

2. In coastal areas, install the unit on the side of the building away from the waterfront.

3. In some situations, fencing or shrubs may give some protection against contaminants. Be mindful of the allowable clearances.

⚠WARNING: Disconnect all power to unit before starting maintenance. Failure to do so can cause electrical shock resulting in personal injury or death. Regular maintenance will reduce the buildup of contaminants and help to protect the unit's finish.

1. Frequent washing of the cabinet, fan blade and coil with fresh water will remove most of the salt or other contaminants that build up on the unit.

2. Regular cleaning and waxing of the cabinet with an automobile polish will provide some protection.

Several different types of protective coatings are offered in some areas. These coatings may provide some benefit, but the effectiveness of such coating materials cannot be verified by the equipment manufacturer. The best protection is frequent cleaning, maintenance and minimal exposure to contaminants.

C.3.5. Cover Panel Installation/ Conversion Procedure

FROM DOWNFLOW TO HORIZONTAL

1. Remove the covers from the supply and return openings on the unit. ***See Figure B.3.6. – B*** for reference.

2. Install the covers over the supply and return openings in the basepan, painted side up, inserting the leading flange under the bracket provided. Place the back flange to top of the front bracket provided. ***See Figure C.3.5. –A*** for reference.

3. Secure the return and supply cover to front bracket with screws.

Figure C.3.5. – A: Downflow to Horizontal Conversion

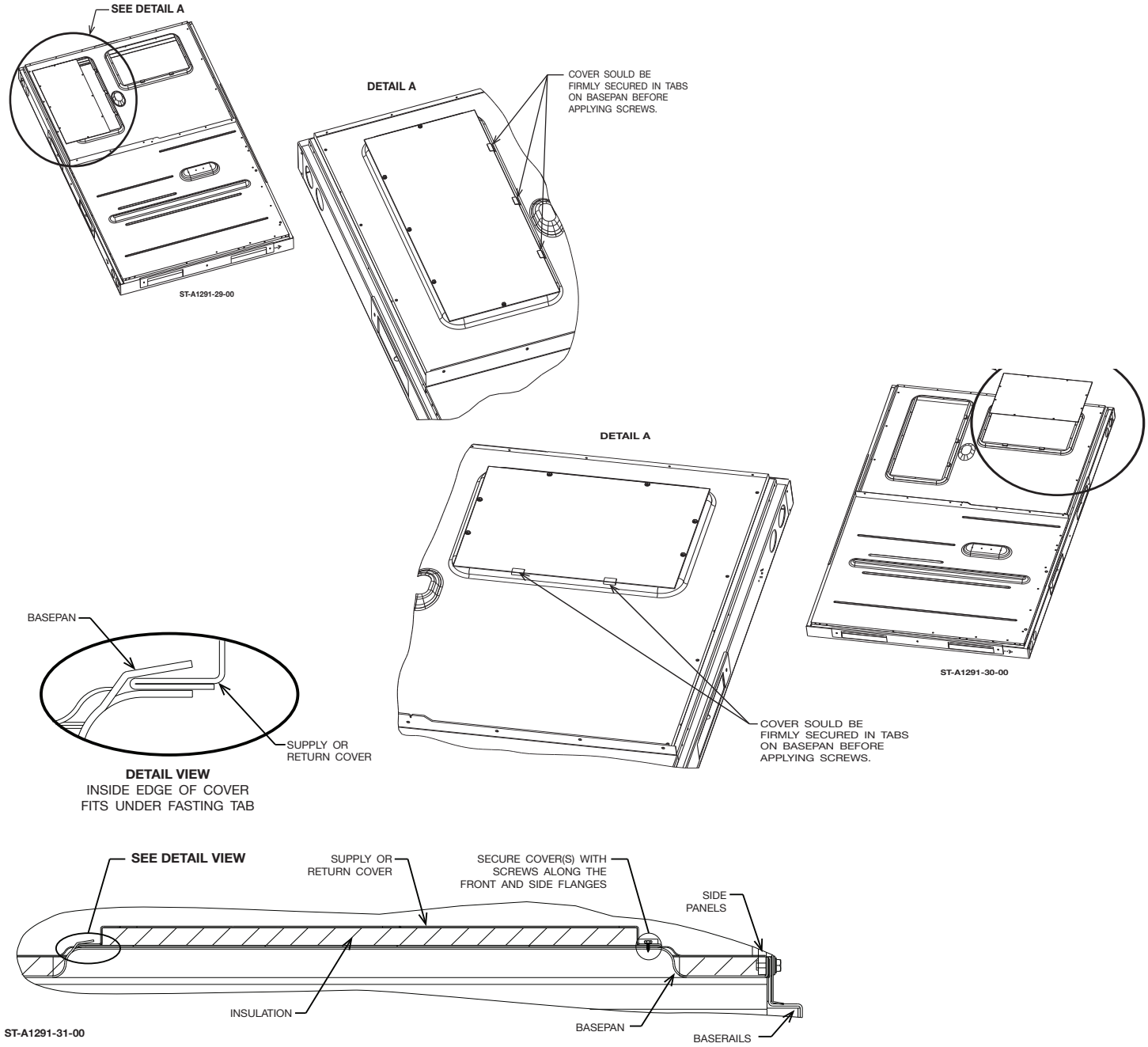

C. INSTALLATION OF THE UNIT

C.4.Setting the Unit

C.4.1. Removing Shipping material

There will be three types of shipping material that will need to be removed: The cardboard basepan protection underneath, the wooden skid on the top, and the condenser coil protection (on non-louver panel units).

• **Cardboard Basepan Protection** – Remove the screws that attach the metal brackets for each of the forklift fork-entry points, and remove the brackets. This will release the cardboard from underneath, and it may be removed when the unit is lifted.

Figure C.4.1. – A: Basepan Protection Assembly

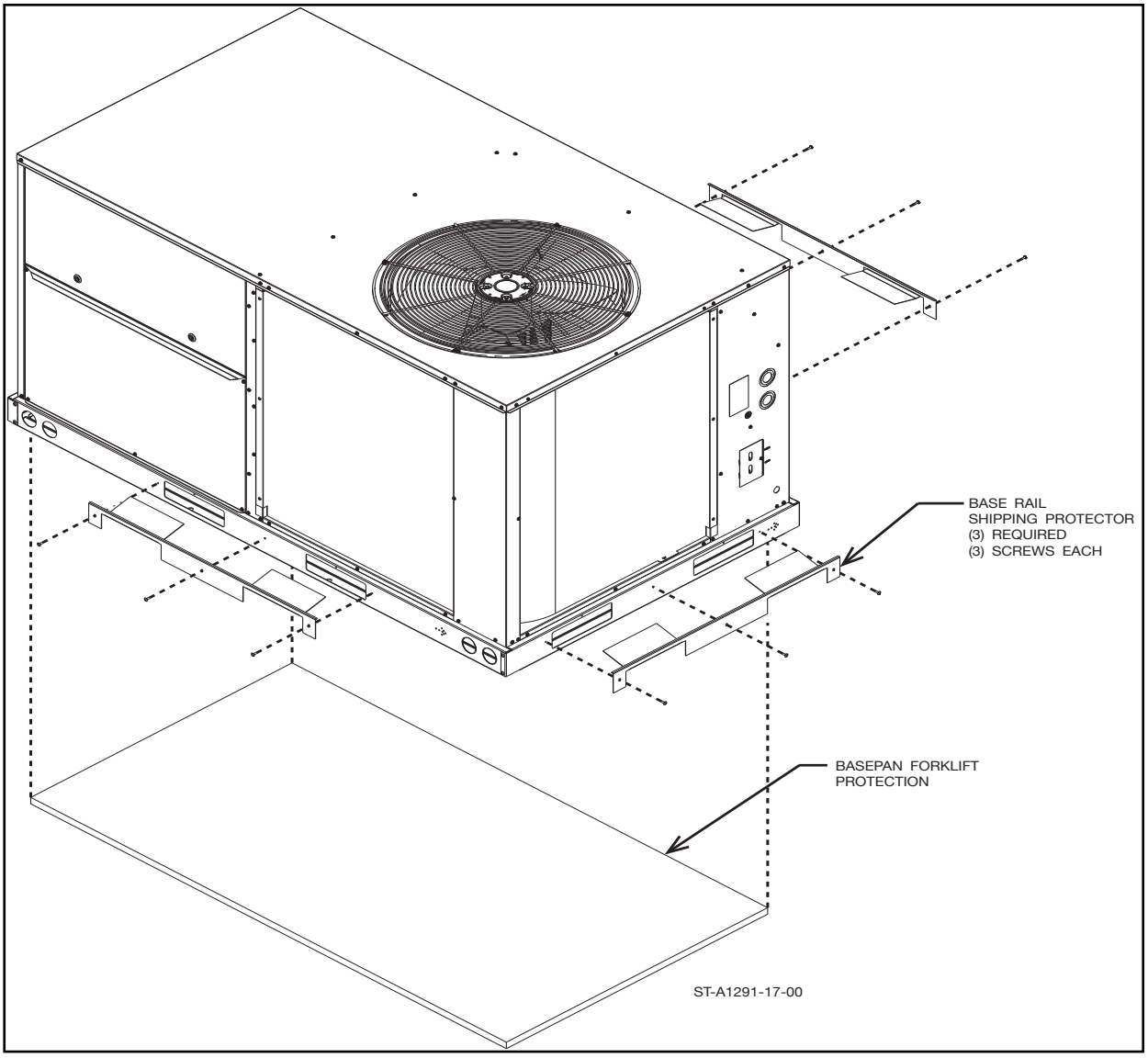

• **Wooden Skid –** Remove the screws from the metal brackets located in the middle along both long sides of the unit. This will detach the two sections of the wooden skid and allow them to be lifted off.

If the unit is to be lifted by a crane, it is recommended to leave the top skid on until after the unit is on the roof to provide extra protection if spreader bars are not used.

Figure C.4.1. – A: Wooden Skid Assembly

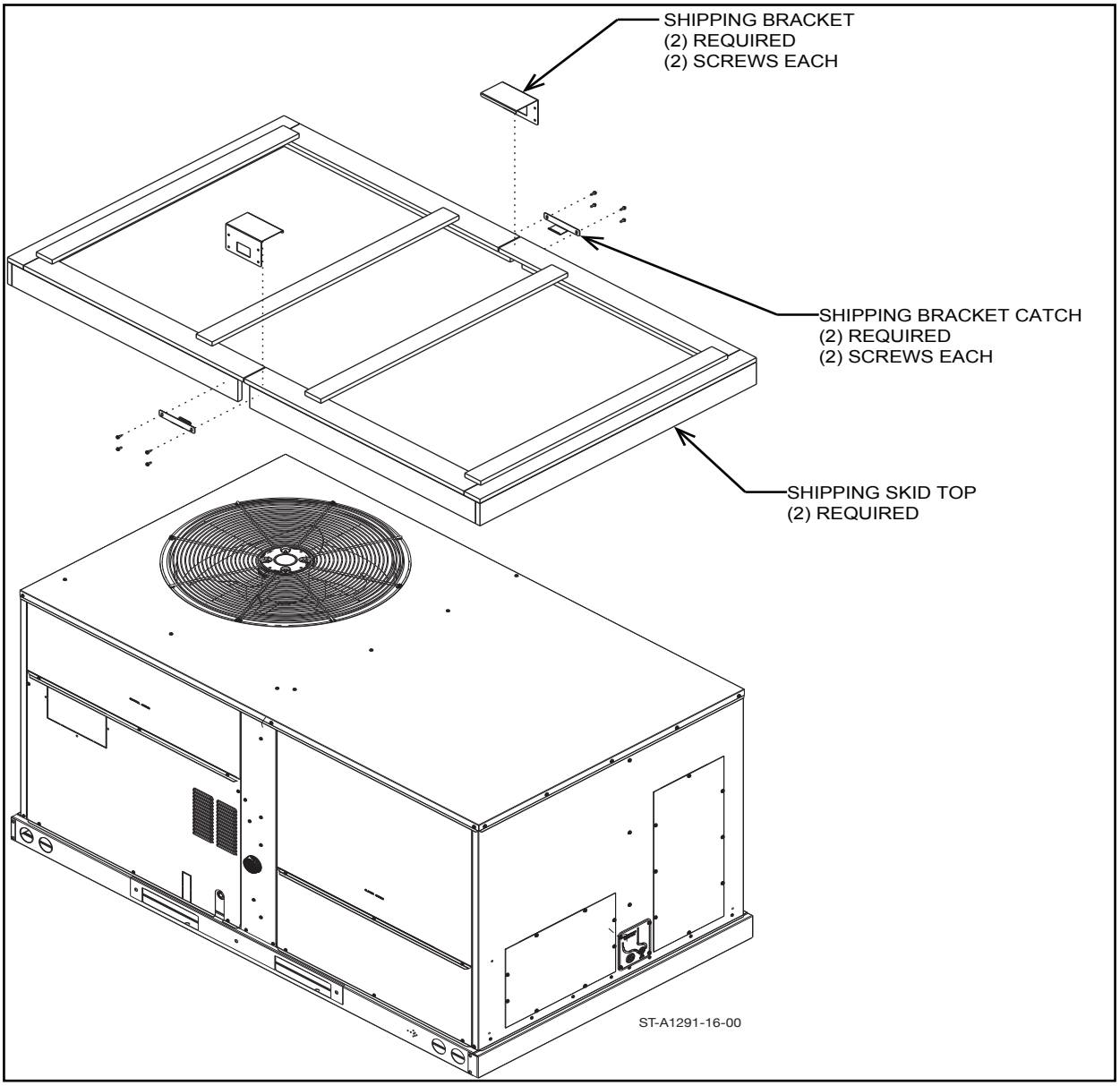

C. INSTALLATION OF THE UNIT

• **Condenser Coil Protection –** Remove the screws along the perimeter of the coil protector. This will allow the protector to be removed. If the unit has louver panels, it will not have the condenser coil protection.

Figure C.4.1. – C: Condenser Coil Protection Assembly

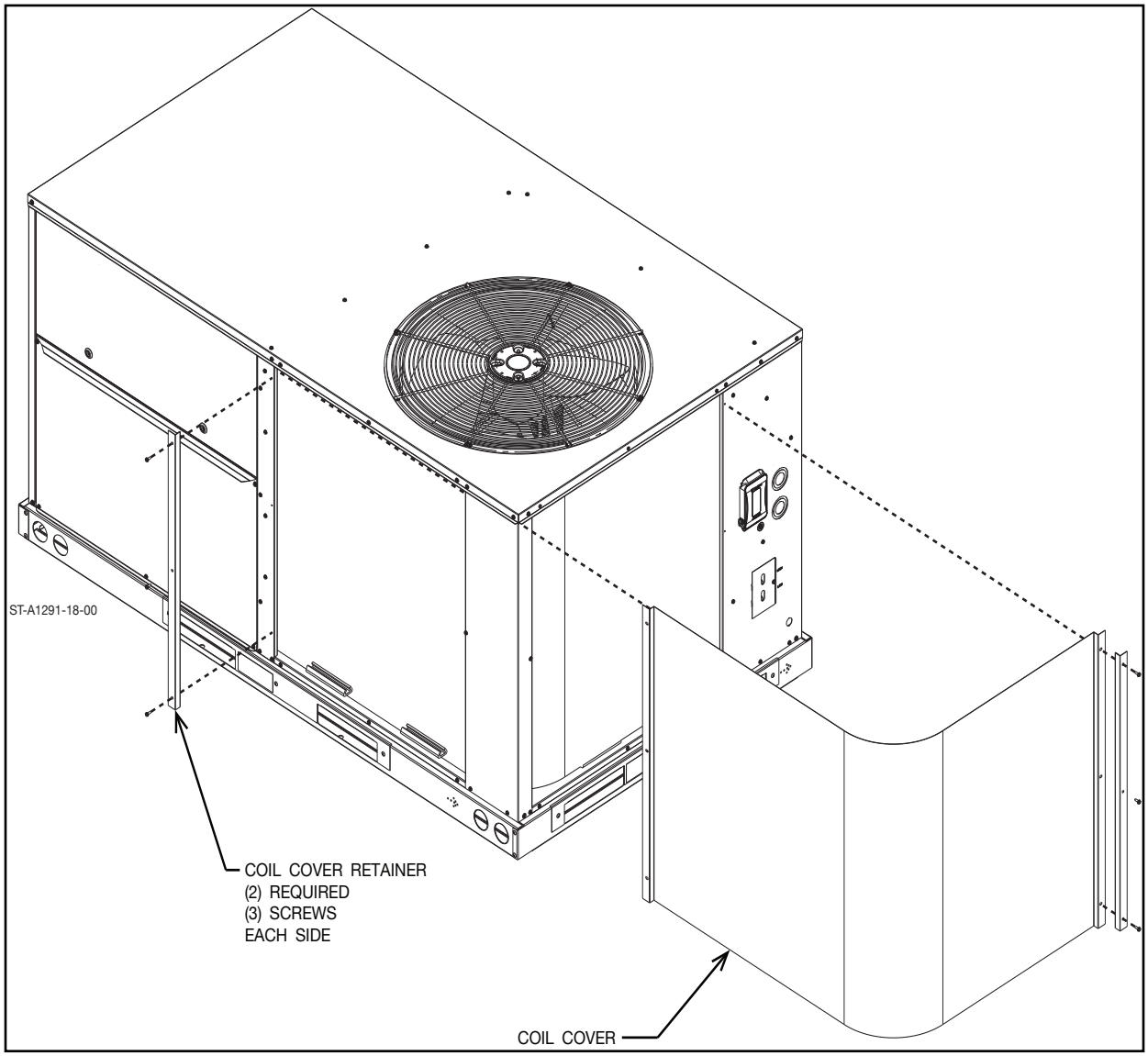

C.4.2. Lifting the Unit

Figure C.4.2. – A : Lifting Detail

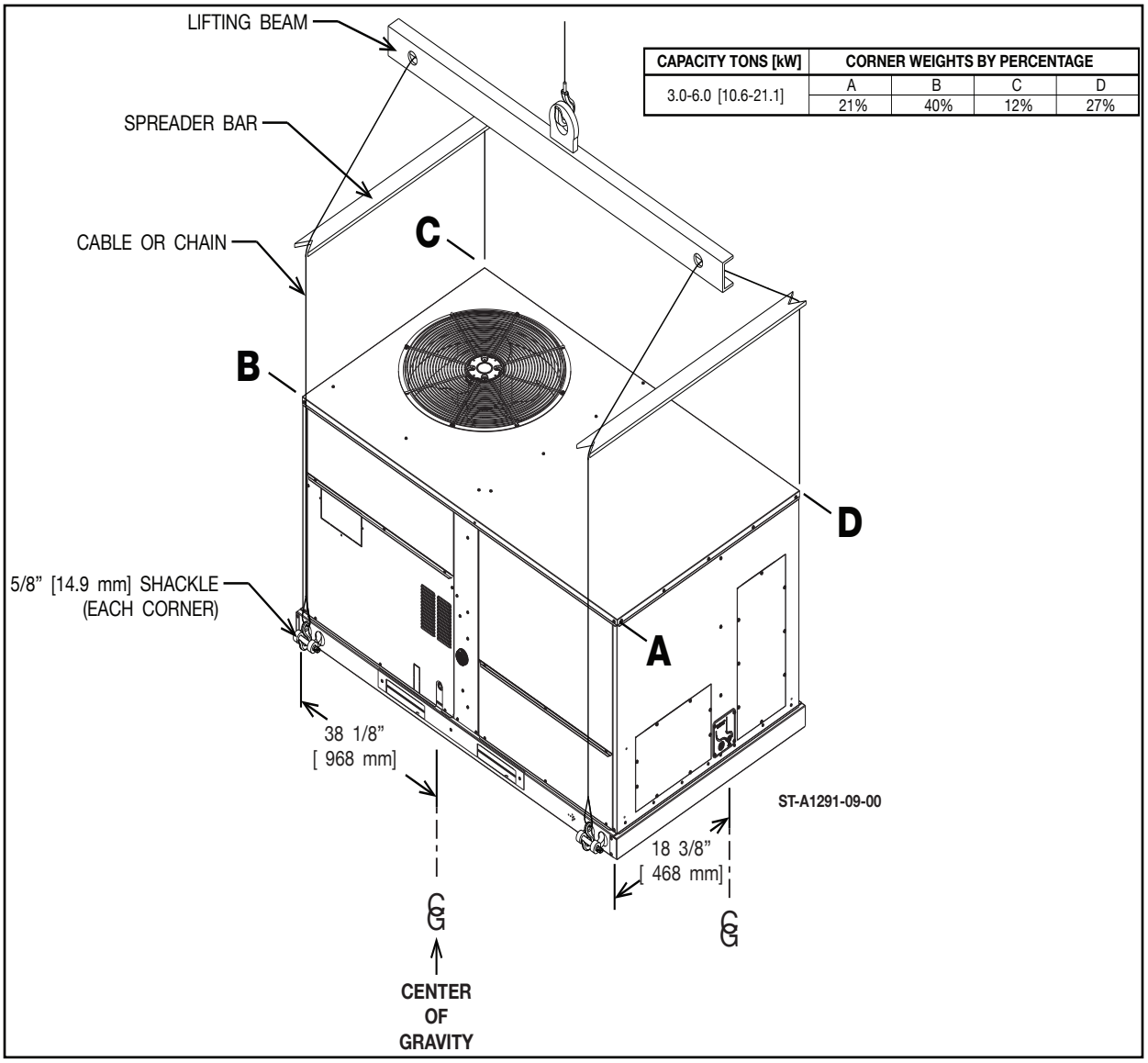

CAPACITY TONS [kW]	CORNER WEIGHTS BY PERCENTAGE			
	A	B	C	D
3.0-6.0 [10.6-21.1]	21%	40%	12%	27%

C. INSTALLATION OF THE UNIT

C.4.3. On a Roof Curb

Refer to ***Figure C.3.1. - A*** in section ***C.3.1. "Unit Location: Allowable Clearances and Operational Issues"*** before installing the unit on a roof curb.

Only use manufacturer-approved roofcurb products for the unit.

C.4.3.1. Installing the Roof Curb

Refer to the separate Installation Instructions for installing a roof curb. These instructions are listed under these Manufacturer Part numbers:

- 14" and 21" Roofcurb: 92-107192-21
- Roofcurb Adapter: 92-107192-23

C.4.3.2. Setting the Unit

Figure C.4.3.2. - A: Setting the unit on Roofcurb Assembly

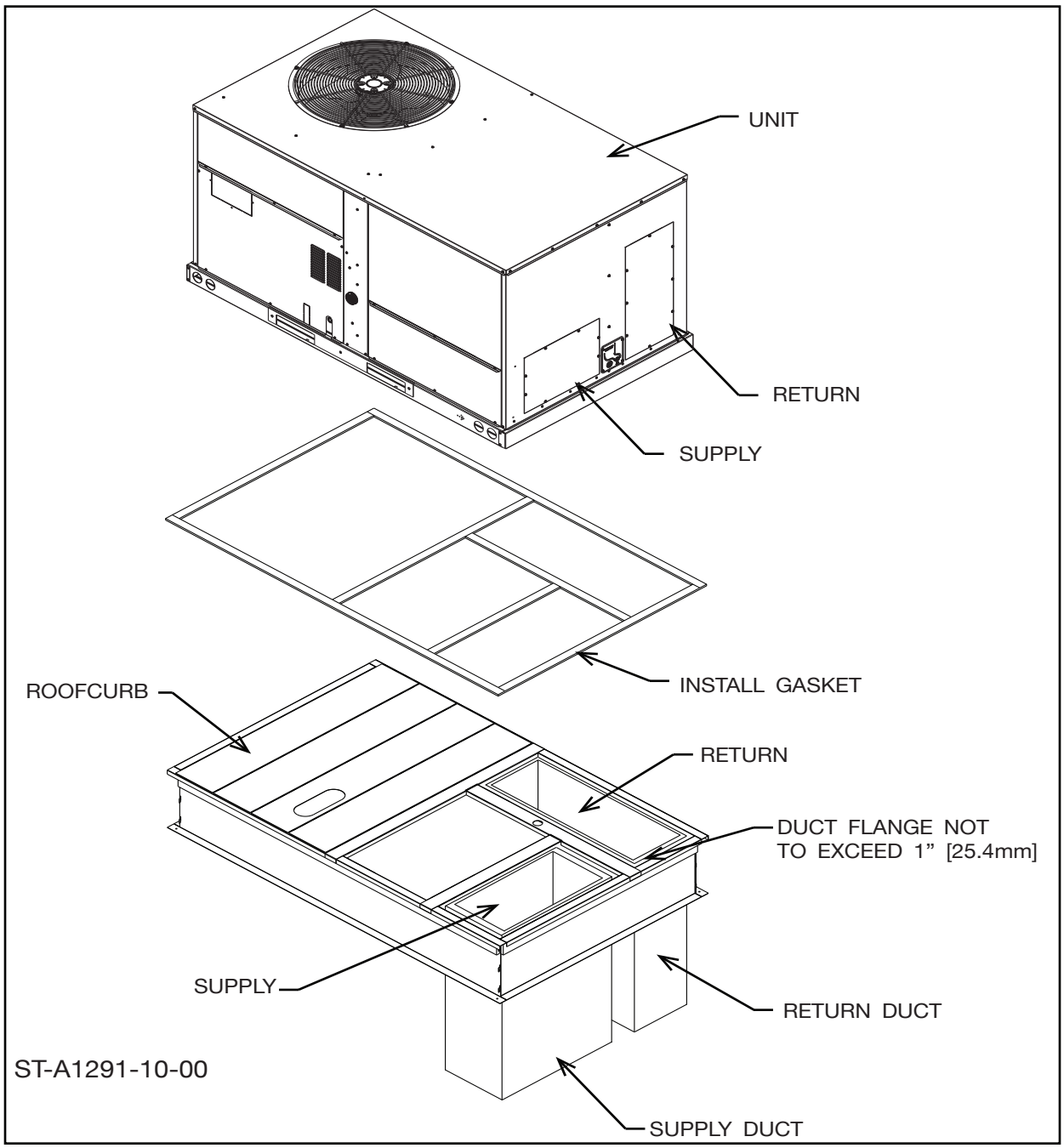

C.4.3.3. High Wind and Seismic Tie-Down Methods

The units must be secured in compliance with ASCE 7-10 and the Florida Building Code 5th Edition. Please refer to ***Appendix J: Unit Tie-Down Methods.***

C.4.4. On a slab

C.4.4.1. Setting the Unit

Set the unit on a stable concrete pad with adequate clearances around the sides of the unit, and make sure the unit is level before securing.

Before setting/securing the unit, use this opportunity to convert the unit from a downflow configuration to a sideflow configuration if necessary. Refer to section ***C.3.5. Cover Panel Installation/Conversion Procedure.***

C.4.4.2. High Wind and Seismic Tie-Down Methods

Slab-installed units must also be secured in compliance with ASCE 7-10 and the Florida Building Code 5th Edition. Please refer to ***Appendix J: Unit Tie-Down Methods.***

C.5. Installing Condensate Drain

IMPORTANT: Install a condensate trap to ensure proper condensate drainage. See ***Figure C.5.1 - A*** for reference.

The condensate drain pan has a threaded female 3/4 inch NPT (11.5 TPI) connection. Drain line must be no smaller than drain pan outlet and adequately sized to accommodate the condensate discharge from the unit. Drain line must be routed to an acceptable drain or outdoors in accordance with local codes. Consult local codes or ordinances for specific requirements of condensate drain piping and disposal.

DO NOT connect condensate drain line to a closed sewer pipe.

C.5.1. Determine Drain Trap Height Requirement

The drain line should be a minimum of 3 inches deep, plus 1 inch for every inch of external static pressure from the blower and duct system. For Example, if the external duct static is 1 inch of water column, the drain trap from the bottom of the trap to the bottom of the drain outlet should be 4 inches, the drain outlet should be 3 inches below the drain connection on the condensate pan. Ensure the outlet of the trap is routed to a suitable drain location as required by local code. See ***Figure C.5.1 - A*** for reference.

Figure C.5.1 – A: Condensate Drain Tap

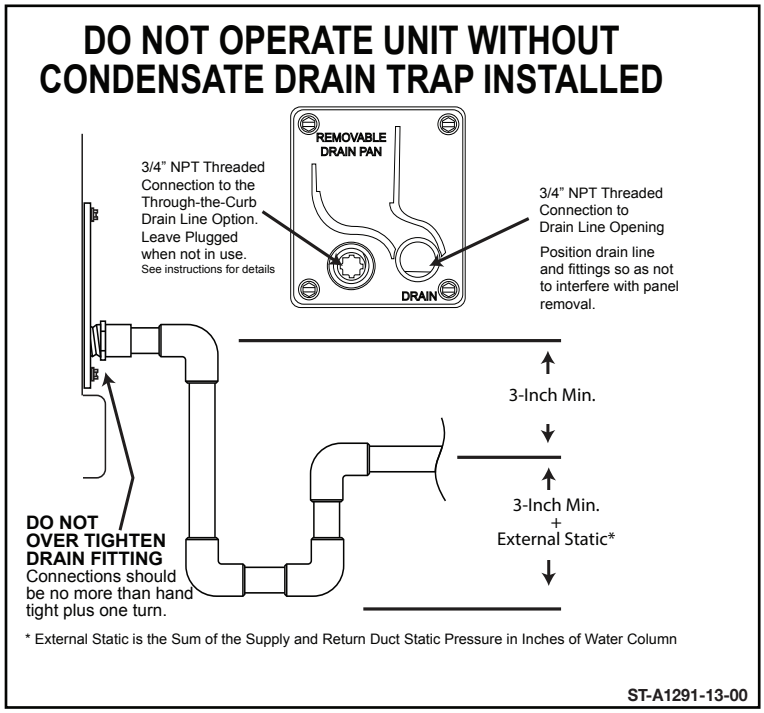

C.5.2. Keeping the condensate drain pan serviceable

To use the removable drain pan feature of this unit, some of the condensate line joints should assembled for easy removal and cleaning. Drain line **MUST NOT** block service access panels.

C.5.3. Connecting the Drain trap

- Use a thin layer of Teflon tape or paste on drain pan connections and install only hand tight.
- Do not over tighten drain pan connections as damage to the drain pan may occur.
- Drain line must be routed to an acceptable drain or outdoors in accordance with local codes.
- Drain line should slope away from unit a minimum of 1/8" per foot to ensure proper drainage.

C.5.4. Connecting the Drain to the through the curb option

The through the curb drain option is available for installations in freezing conditions or that do not want water draining on the roof. Use adapters and elbows to turn out of the drain opening on the right and into the curb drain opening on the left. Under the unit connect a ¾" male treaded fitting, use thread sealant, into the opening between the supply and return duct openings under the unit. Install a properly sized drain trap in the conditioned space of the building and route to a suitable drain location as code requires.

C. INSTALLATION OF THE UNIT

C.5.5. Freezing Condition considerations

- Drain line may need insulation or freeze protection in certain applications.
- Drain line should slope away from unit a minimum of 1/8” per foot to ensure proper drainage.

C.6. Final Installation Inspection

C.6.1. Remove Shipping Material

Before the unit is secured to the slab/roofcurb, check that all shipping material has been removed. See section ***C.4.1.*** for how to remove shipping material.

NOTE: Failure to remove the condenser coil protector on non-louver panel units will negatively impact performance and be harmful to system components. Failure to remove the cardboard basepan protector will block all indoor airflow for downflow configurations.

Open all compartments to ensure there are no tools or other misc parts remaining in the unit from setup. This is most important on the blower section to avoid damage to the blower assembly.

C.6.2. Checking Level and Slope

This unit must be mounted level in both directions to allow water to properly drain from the condenser section and condensate pan.

C.6.3. Condensation and Sweating

In certain regions or climates, portions of the exterior of the unit may condensate or sweat during cooling operation. This is normal and expected.

D. DUCT AND VENTING

D.1. Air Flow and Static Pressure

See ***Appendix C*** towards the end of this manual for Air Flow Performance Data. For Air Flow adjustment and set up, see section ***J.3. “Checking and Adjusting Air Flow”.***

D.2. Duct Requirements and Best Practices

The installing contractor should fabricate ductwork in accordance with local codes.

Use industry manuals as a guide when sizing and designing the duct system.

Contact Air Conditioning Contractors of America, 1513 16th St. N.W., Washington, D.C. 20036.

⚠WARNING: DO NOT, under any circumstances, connect return ductwork to any other heat producing device such as fireplace insert, stove, etc. Unauthorized use of such devices may result in fire, carbon monoxide poisoning, explosion, personal injury, property damage or death.

Place the unit as close to the conditioned space as possible allowing clearances as indicated. Run ducts as directly as possible to supply and return outlets. Use of non-flammable weatherproof flexible connectors on both supply and return connections at unit to reduce noise transmission is recommended.

On ductwork exposed to outside temperature and humidity, use a minimum of 2” of insulation and a vapor barrier. Distribution system in attic, furred space or crawl space should be insulated with at least 2” of insulation. Half-inch to 1” thick insulation is usually sufficient for ductwork inside the air conditioned space.

Provide balancing dampers for each branch duct in the supply system.

Properly support ductwork from the structure.

IMPORTANT: In the event that the return air ducts must be run through an “unconfined” space containing other fuel burning equipment, it is imperative that the user/homeowner must be informed against future changes in construction which might change this to a “confined space.” Also, caution the user/homeowner against any future installation of additional equipment (such as power ventilators, clothes dryers, etc.), within the existing unconfined and/or confined space which might create a negative pressure within the vicinity of other solid, liquid, or gas fueled appliances.

D.2.1. Supply Duct Systems

A properly designed supply duct system, meeting all local codes and best practices, must be installed to ensure proper air flow and minimize the static pressure on the blower.

The supply duct opening for roof curb installations is 17 3/4” x 16 3/8”, the supply duct opening for horizontal ducted installations is 18 5/8” x 13 1/8”. See ***Figure B.3.6. – A and – B*** for reference.

D.2.2. Return Duct Systems

A properly designed return duct system, meeting all local codes and best practices, must be installed to ensure proper air flow and minimize the static pressure on the blower.

The return duct opening for roof curb installations is 25 5/8” x 12 1/8”, the return duct opening for horizontal ducted installations is 26 5/8” x 12”. See ***Figure B.3.6. – A and – B*** for reference.

D.2.3. Isolation for Noise abatement

Noise from operational vibration can occur with this equipment, the use of flexible duct adapters and vibration damping curb adapters maybe required depending upon the building type and use. Consult with a local mechanical engineer on the duct and building design to determine if any noise abatement solutions need to be considered before installation.

D.3. Filters

D.3.1. Installing Filters

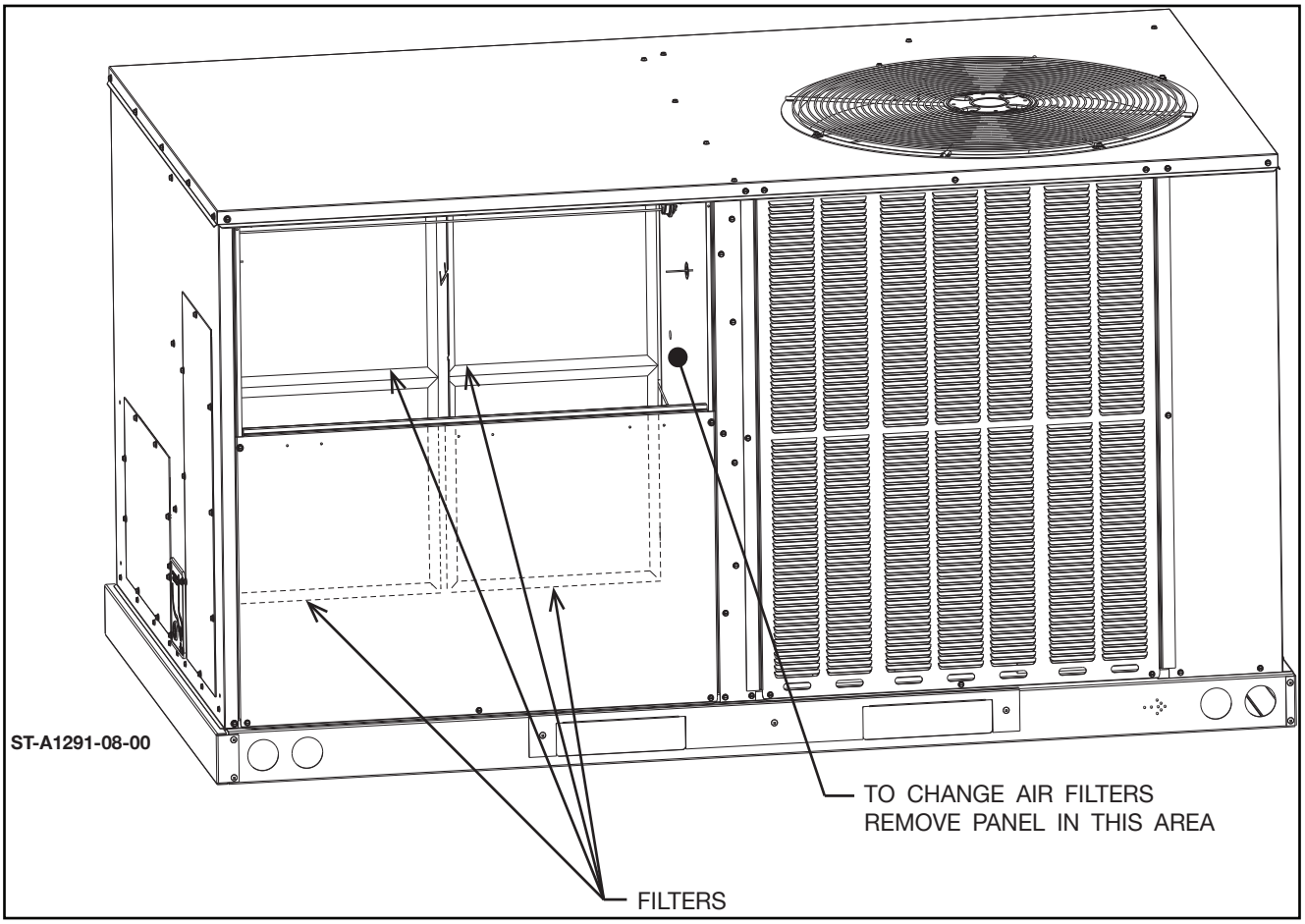

D. DUCT AND VENTING

D.3. Filters

D.3.1. Installing Filters (Cont.)

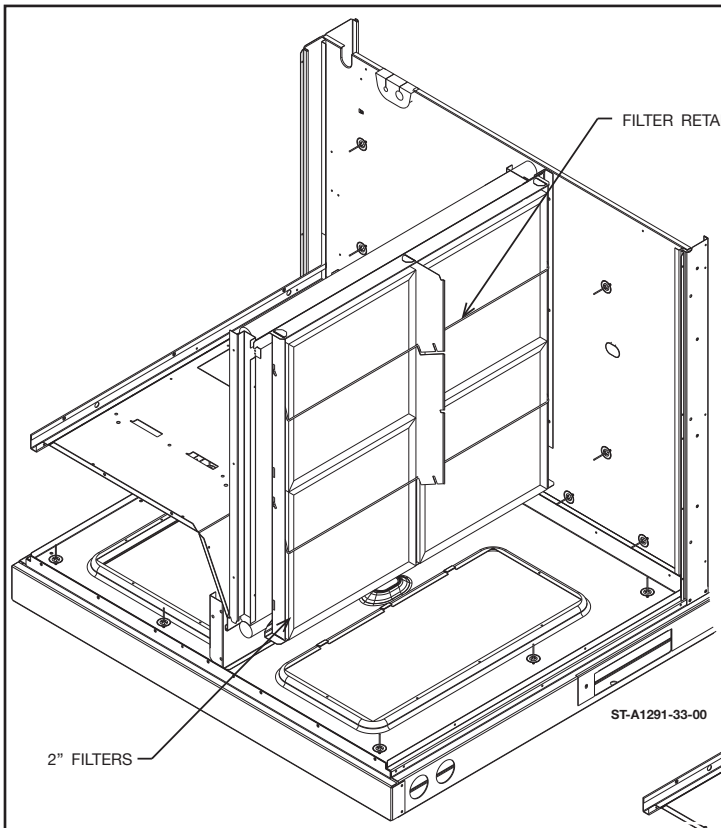

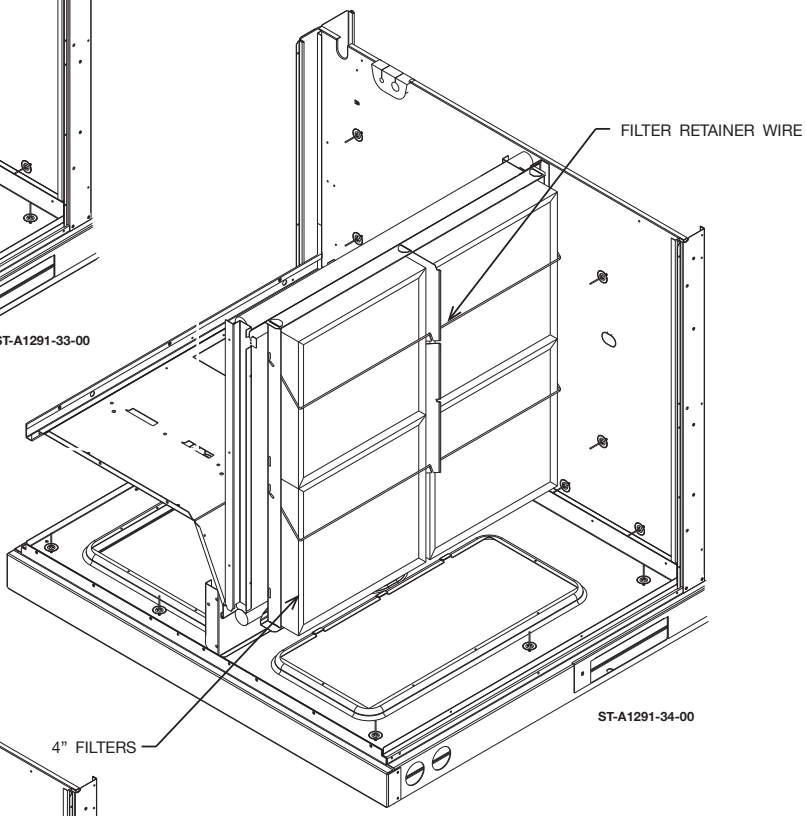

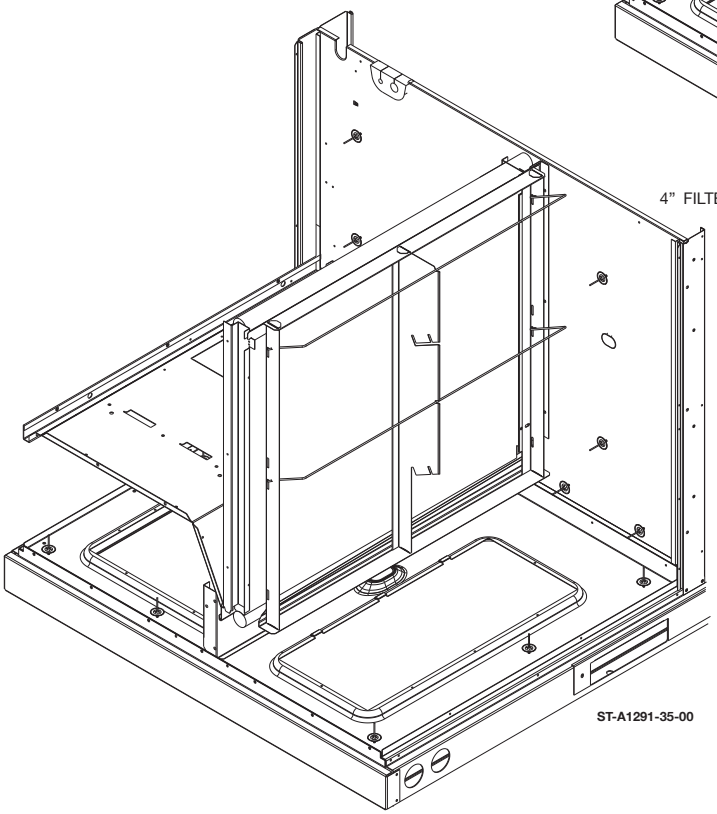

This product will accept both 2” and 4” filters. A new unit ships with four 2” x 16” x 16” filters. For units with an economizer, only use 2” filters due to fitment clearances. To replace filters, follow these steps:

1. Remove “Filter Access” panel.
2. Pull downwards on retainer wire and rotate upwards to unlock filters.
3. Secure retainer wire in notch.
4. Remove and discard current filters.
5. Install new filters with airflow arrow pointing towards evaporator coil.
6. Rotate retainer wire downward to original position and secure in notch.
7. Install “Filter Access” panel.

D.4. Economizers and Fresh Air Dampers

D.4.1. Economizer Information

ECONOMIZERS - Mechanical devices used to make the Heating Ventilation and Air Conditioning (HVAC) unit more efficient by regulating the return air and outside air. Economizers for this product come in several configurations.

The Downflow Economizer is designed specifically for units setup in a downflow configuration. The downflow economizer fits inside the package unit and sits over the return-air opening along the bottom of the unit. All economizers are equipped with horizontal gear driven blades and a gravity relief damper (Barometric Relief).

The Horizontal Economizer is designed specifically for units setup in a horizontal flow configuration. The horizontal economizer utilizes independently actuated return-air and fresh air dampers to enable the most efficient handling of air achievable with this platform. The horizontal economizer also includes an externally-mounted (to the duct work) gravity relief damper.

All units with economizers come shipped from the factory with a parts bag and a separate document for Economizer Installation & Operation instructions. Refer to that document for information on how to install the economizer, connect the controls, and adjust the airflow. Accessory economizers purchased separately will also come with the parts bag and instructional document.

For reference, the Installation Instructions for economizers may be found under these Manufacturer part numbers:

- Downflow Economizer: 92-107192-17
- Horizontal Economizer: 92-107192-18
- Downflow Economizer w/ DDC: 92-107192-19
- Horizontal Economizer w/ DDC: 92-107192-20

Figure D.4.1. – A: Downflow Economizer with Hood

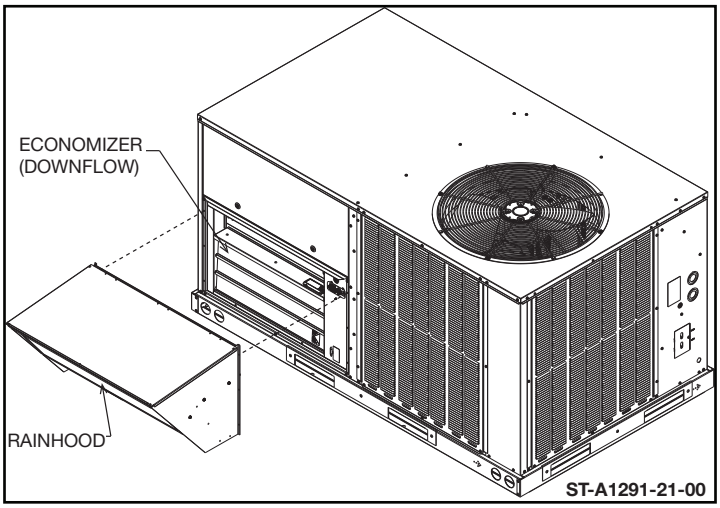

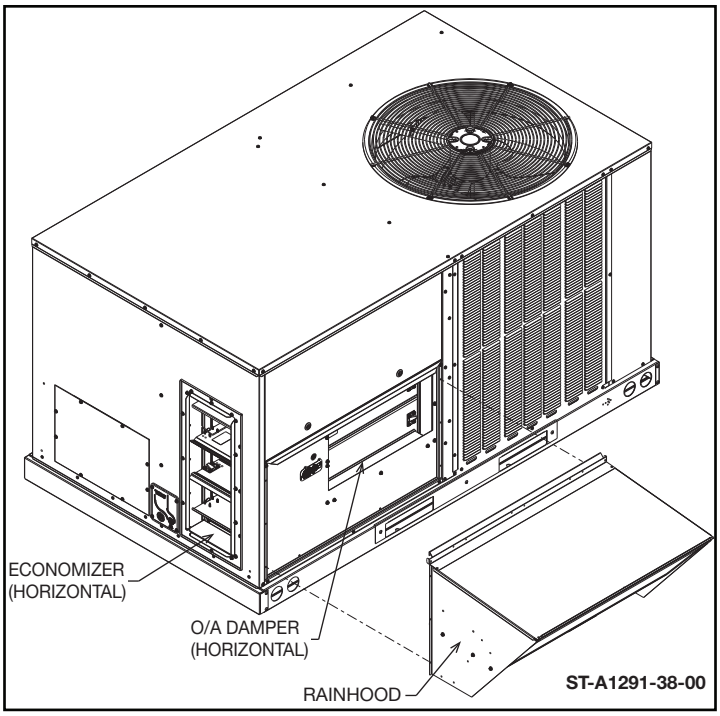

D.4.2. Fresh Air Dampers

MANUAL DAMPER HOODS – Manual damper hoods are often installed as a low cost substitute for an economizer.

The idea is to manually set the blade located inside the hood to restrict the opening by introducing Static Pressure, thereby balancing the outside air with the return air entering the RTU.

The drawback to a manual damper is that it is open 24 hours a day, 365 days a year. Therefore they introduce outside air during occupied and unoccupied modes increasing the load on the rooftop unit.

MOTORIZED DAMPER HOODS – A motorized damper is economical, and provides more comfort than a manually adjusted hood damper.

The motorized damper is coupled to an actuator, and designed to open when the RTU fan is running, and close when the fan is off. The advantage of the motorized damper is that the outside air is no longer a factor once the RTU fan is cycled off.

By connecting a Timer, CO2 Sensor or Smoke Detector in series between the RTU fan ("G" on the Thermostat) and actuator, the damper can be controlled during "Unoccupied" hours, or allow the damper to only introduce outside air during "On-Demand Occupancy."

Fresh Air Dampers come shipped with a separate document for Installation & Operation instructions. Refer to that document for information on how to install and adjust the dampers.

For reference, the Installation Instructions for Fresh Air Dampers may be found under these manufacturer part numbers:

- Manual Fresh Air Damper: 92-107192-25
- Motorized Fresh Air Damper: 92-107192-26

Figure D.4.2. – A: Fresh Air Damper

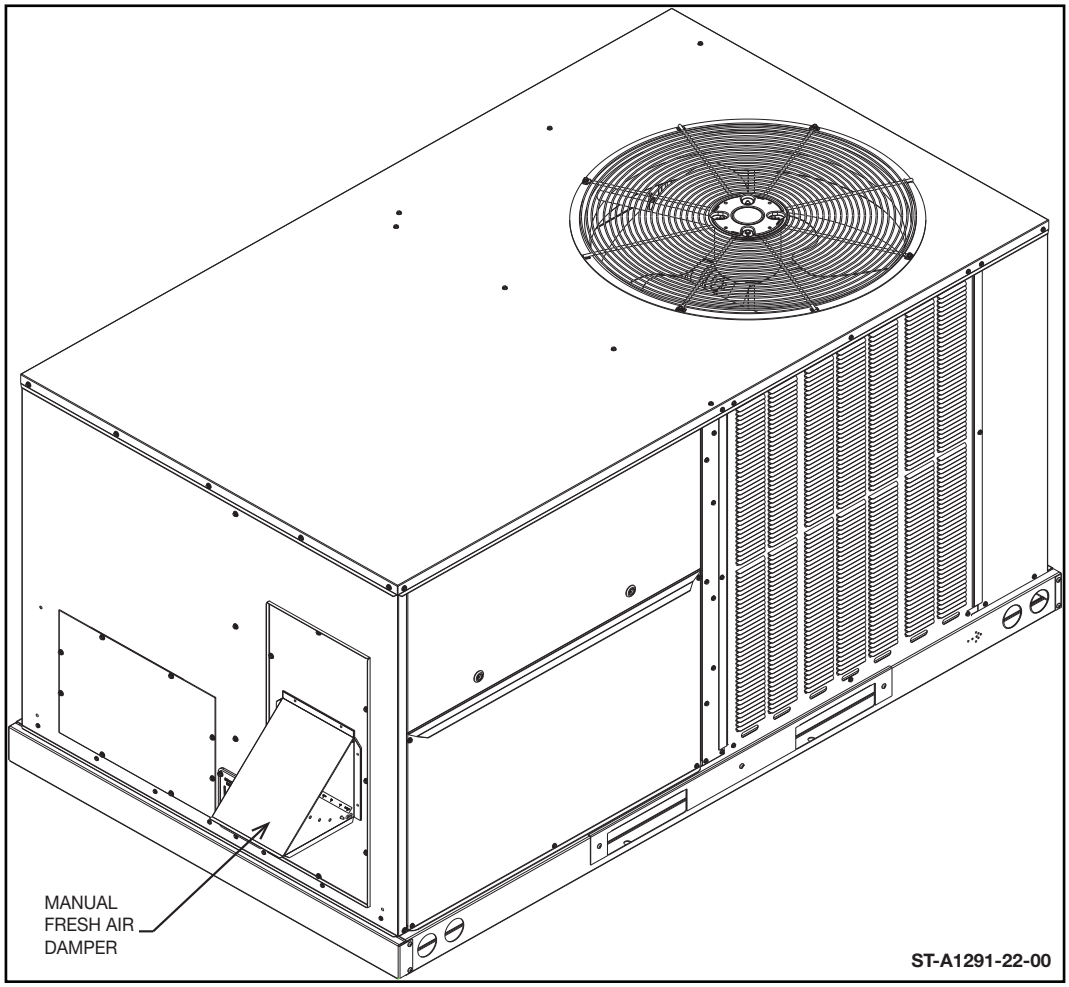

D.4.3. Powered Exhaust

POWER EXHAUST - This accessory is a motorized fan designed to remove air from the conditioned space efficiently. While this is useful for removing a high positive pressurization, caution must be taken in the setup of the system to avoid creating a negative pressure within the conditioned space. If negative pressure occurs, leaky windows, doors, and electrical fixtures will allow the outside air to creep in causing drafts or hot sports within a room.

Figure D.4.3. – A: Powered Exhaust

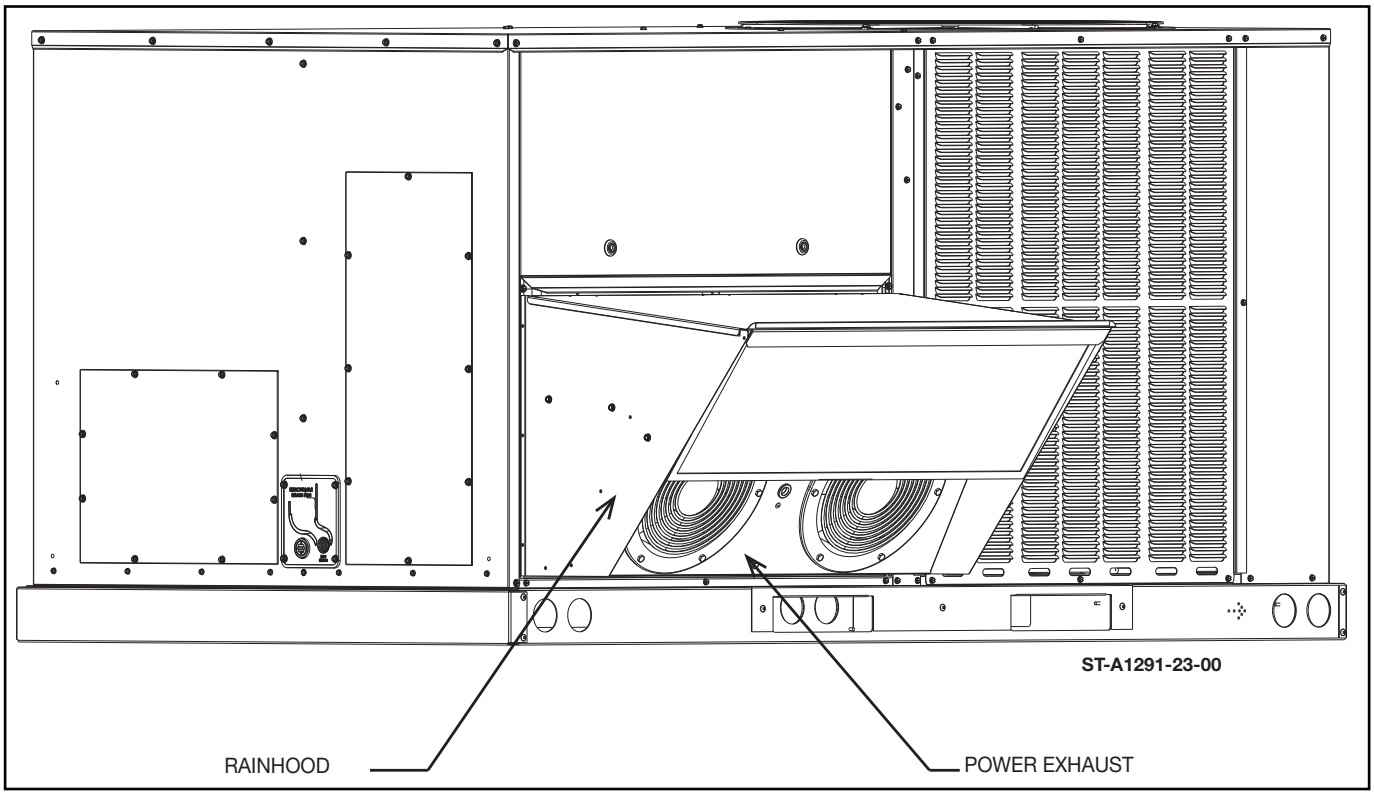

D. DUCT AND VENTING

D.5. Smoke Detectors

Figure D.5. – A: Smoke Detector Assembly

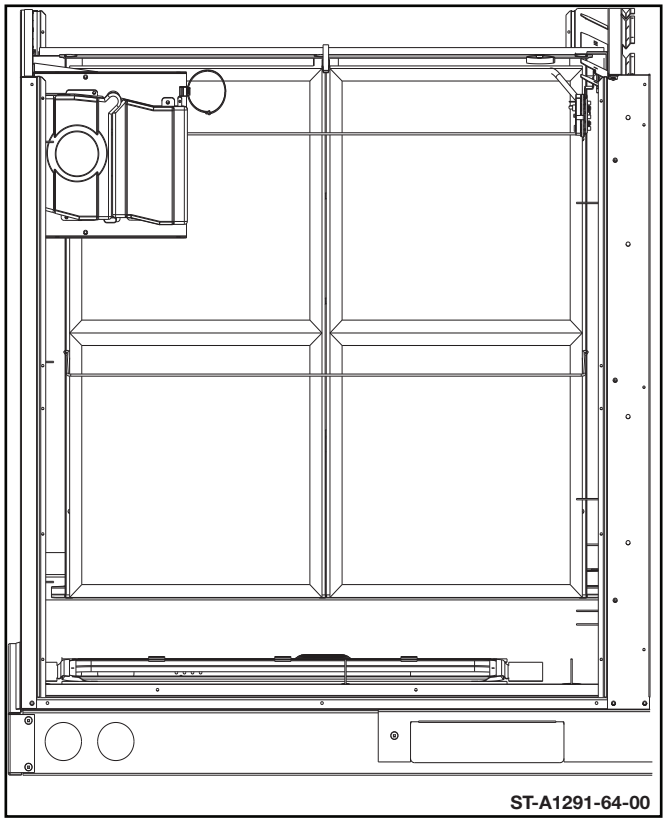

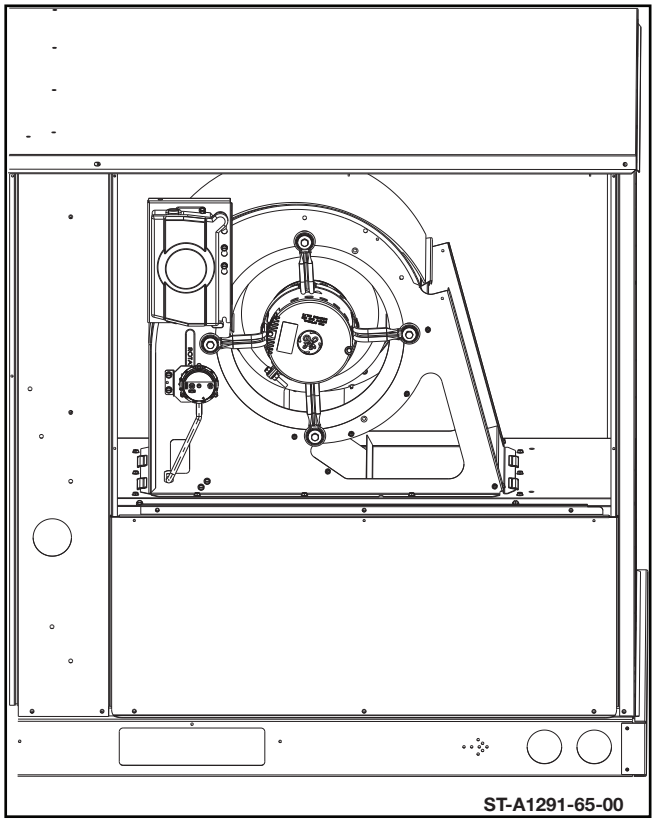

D.5.1. Supply Duct Smoke Detectors

D.5.1.1. Field Installed – Installation, Wiring and setup

Field install Supply and Return Duct Smoke Detectors come shipped with a separate document for Installation & Operation instructions. Refer to the separate Installation Instructions for installing, wiring, and setup of a supply and return smoke detector. These instructions are listed under ***Manufacturer Part number: 92-106191-03.***

D.5.1.2. Factory Installed – Inspection and setup

Inspect the smoke detector assembly for any damage during shipping. Use ***Figure D.5. – A*** for reference. Confirm that all wiring connections are still secure. Refer to the separate Installation Instructions, ***Manufacturer Part Number 92-106191-03***, for smoke detector for wiring diagrams and additional assembly instructions.

D.5.1.3. Field Installed 3rd Party Smoke Detectors or Fire Control Panels

See **section F.1.2.** for the proper connection points for a remote smoke detector. **DO NOT** break 24vac to the Thermostat: shutdown will not occur. **DO NOT** break 24vac from the transformer: it can overload the smoke detector controls.

E.1. Electrical Safety Information

E.1.1. Information on Power Supply

⚠WARNING: Turn off the main electrical power at the branch circuit disconnect closest to the unit before attempting any wiring. Failure to do so can cause electrical shock resulting in personal injury or death.

1. All wiring should be made in accordance with the **National Electrical Code**. Consult the local power company to determine the availability of sufficient power to operate the unit. Check the voltage at power supply to make sure it corresponds to the unit's RATED VOLTAGE REQUIREMENT. Install a branch circuit disconnect near the rooftop, in accordance with the N.E.C., C.E.C. or local codes.

2. It is important that proper electrical power is available at the unit. Voltage should not vary more than 10% from that stamped on the unit nameplate. On **three phase units**, phases must be balanced within 3%.

3. For branch circuit wiring (main power supply to unit disconnect), the minimum wire size for the length of run can be determined from the **N.E.C.** using the circuit ampacity found on the unit rating plate. Use the smallest wire size allowable in ***Figure F. – A*** from the unit disconnect to unit.

4. For through the base wiring entry reference ***Figure F.2. – A: Power and Control Routing***. All fittings and conduit are field supplied for this application. Reference the chart with ***Figure F.2. – B: Hole Sizing for Conduit*** for proper hole and conduit size.

NOTES:

1. For branch circuit wiring (main power supply to unit disconnect), the minimum wire size for the length of run can be determined from ***Appendix B "Electrical Data"*** or the unit rating plate for circuit ampacity and the National Electrical Code to determine proper wire sizing. From the unit disconnect to unit, the smallest wire size allowable in ***Figure F. – A*** for the circuit ampacity may be used, as the disconnect must be in sight of the unit.

2. Wire size based on 75°C rated wire insulation for 1% voltage drop.

3. For more than 3 conductors in a raceway or cable, see the National Electrical Code (or C.E.C. in Canada) for derating the ampacity of each conductor.

IMPORTANT: This unit is approved for use with copper conductors only connected to unit contactor.

WARRANTY MAY BE JEOPARDIZED IF ALUMINUM WIRE IS CONNECTED TO UNIT CONTACTOR.

Special instructions apply for power wiring with aluminum conductors:

Warranty is void if connections are not made per instructions.

Attach a length (6” or more) of recommended size copper wire to the unit contactor terminals L1, L2 and L3 for three phase.

Refer to the National Electric Code (NEC) for sizing wire to elec heat / single point. See Appendix E - Heater Kit Characteristics for additional info.

Splice copper wire pigtails to aluminum wire with U.L. recognized connectors for copper-aluminum splices. Please exercise the following instructions very carefully to obtain a positive and lasting connection:

1. Strip insulation from aluminum conductor.

2. Coat the stripped end of the aluminum wire with the recommended inhibitor, and wire brush the aluminum surface through inhibitor. INHIBITORS: Brundy-Pentex “A”; Alcoa-No. 2EJC; T & B-KPOR Shield.

3. Clean and recoat aluminum conductor with inhibitor.

4. Make the splice using the above listed wire nuts or split bolt connectors.

5. Coat the entire connection with inhibitor and wrap with electrical insulating tape.

NOTE: Wiring to be done in the field between the unit and devices not attached to the unit, or between separate devices which are field installed and located, shall conform with the temperature limitation for Type T wire [63°F rise (35°C)] when installed in accordance with the manufacturer’s instructions.

E.1.2. 208/240 Volt Operation and Required Adjustments

E.1.2.1.Low Voltage Transformer Tap Adjustment for 208Volt

Transformer is factory wired for 230 volts on 208-230 volt models and must be changed for 208 volt applications. See unit wiring diagram for 208 volt wiring.

E.2. Electrical Data

See ***Appendix B*** towards the end of this manual for Electric Data.

E.3. Electrical Connections

Figure E.3. – A: Typical Thermostat Wiring

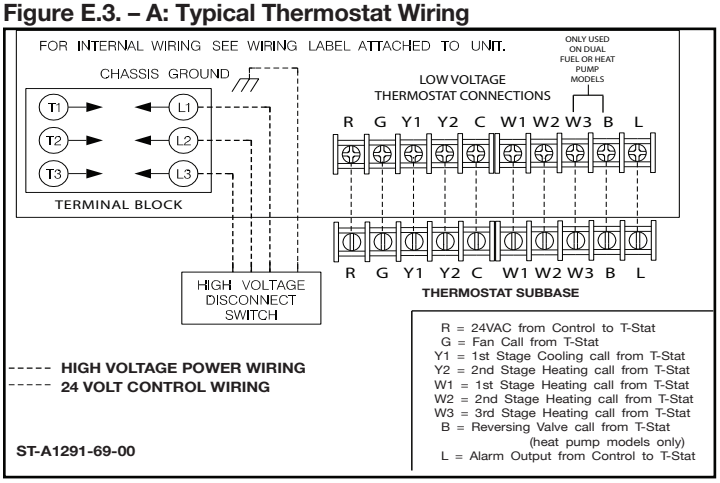

Use to ***Appendix B*** "Electrical Data" and National Electrical Code for circuit ampacity to determine proper wire sizing.

Refer to ***Figure F.2. – A: Power and Control Routing*** for location of wiring entrances, and ***Figure F.2. – B: Hole Sizing for Conduit.***

E.3.1. Field Supplied Disconnect

The field supplied service disconnect will come with a separate Installation Instruction document. Please refer to that document, or ***Manufacturer part number: 92-106191-04.***

Figure E.3.1.1. – A: Standard Location for Mounting Disconnect

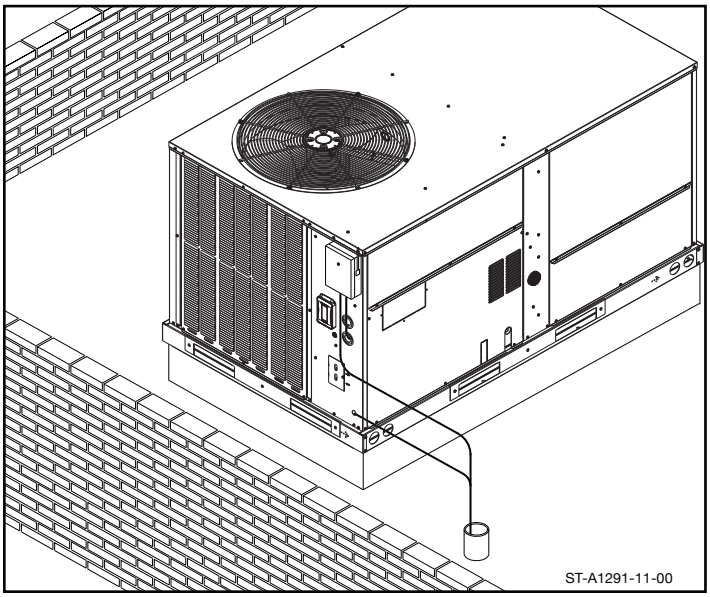

E.3.1.1. Mounting Disconnect on Cabinet

Attach the disconnect to the top of the left hand side of the control box, above the knockouts and refridgerant test ports. Do not use screws above or below the label specifying "TO PREVENT COIL DAMAGE – DO NOT ADD SCREWS HERE, ABOVE, OR BELOW LABEL" as hidden coil and tubing could be damaged. An example of this label is shown below.

Figure E.3.1.1. – B: Label Showing Where to NOT Use Screws

E.3.1.2. Routing Wires into Cabinet

See ***Figure F.2. – A: Electrical and Piping Routing*** for conduit entry points and routing locations for wiring into the control box.

See ***Figure E.3. – A: Typical Thermostat Wiring*** for wiring to the contactor and thermostat in the control box.

E.3.1.3. Routing Wires through Curb (Option)

Use liquid tight connectors and tubing to connect the electrical and low voltage control cables between the base of the cabinet at the raised section (See ***Figure B.3.6. - A: Supply And Return Dimensions For Downflow Applications*** for location of raised section) and bottom of the control panel. Conduit and fittings must meet all applicable codes.

Use Silicon and gaskets to seal the connection at the base pan

E.3.1.4. Connecting to Contactor terminal blocks

The recommended torque for securing wiring to the contactor is **40 in-lb**.

See ***Figure E.3. – A: Typical Thermostat Wiring*** for wiring to the contactor.

E.3.2. Factory Installed Disconnect

Refer to ***Appendix G*** for the unit wiring diagrams, and to ***Figure F.2. – A*** for locations to route wires into the cabinent or through the curb/basepan of the unit.

E.3.2.1. Routing Wires into Cabinet

Refer to section ***E.3.1.1.*** and/or section ***F.2.*** for routing wires into the cabinet with a factory installed disconnect.

E.3.2.2. Routing wires through Curb (Option)

Refer to section ***E.3.1.3.*** for routing wires through the curb with a factory installed disconnect.

E.3.3. Connecting the Convenience Outlet

E.3.3.1. Non-powered

The non-powered convenience outlet, if purchased as an option for the unit, will come shipped in a box within the blower compartment of the unit. It will need to be removed and installed into its proper configuration.

For connecting the non-powered convenience outlet and all other information, refer to the installation instructions for the accessory.

Manufacturer I&O part number: 92-42576-03

E.3.3.2. Powered

The powered convenience outlet, if purchased as an option for the unit, will come shipped pre-installed into the unit. No addional hook-up will be needed, but ensure the connections remained secure from shipping before powering the unit.

For connecting the powered convenience outlet and all other information, refer to the installation instructions for the accessory.

Manufacturer I&O part number: 92-106973-01

E.3.4. Checking Phase and Motor Rotation

When using 3 phase power the only device that is rotation dependent is the compressor. The outdoor fan and indoor blower do not require any adjustment and will turn backwards if the phase is incorrect. Verify the direction of rotation for the indoor blower motor before starting up the compressors.

E.3.4.1. Checking Phase with VFD Drive

On any models equipped with an ECM Direct Drive Blower Motor or belt drive units with a Variable Frequency Drive, VFD, the motor will always rotate in the correct direction. Correction phase must be checked by the operation of the compressor.

E.3.5. Grounding Requirements

Refer to local codes as required. Must be grounded to a common earth ground.

National Electric Code (NEC) / International Building Code / Canadian Electrical Code

A diagram of the internal wiring of this unit is located on the inside of control access panel and in this manual. If any of original wire as supplied with the appliance must be replaced, the wire gauge and insulation must be same as original wiring.

The low voltage wiring should be sized as shown in ***Figure F. – A: Field Wire Size for 24v Thermostat Circuits.***

Figure F. - A

FIELD WIRE SIZE FOR 24 VOLT THERMOSTAT CIRCUITS							
THERMOSTAT LOAD - AMPS		SOLID COPPER WIRE - AWG.					
	3.0	16	14	12	10	10	10
	2.5	16	14	12	12	12	10
	2.0	16	16	14	12	12	10
		50	100	150	200	250	300
		LENGTH OD RUN - FEET (1)					

ST-A1291-14-00

(1) THE TOTAL WIRE LENGTH IS THE DISTANCE FROM THE FURNACE TO THE THERMOSTAT AND BACK TO THE FURNACE.

NOTE: DO NOT USE CONTROL WIRING SMALLER THAN NO. 18 AWG.

Install the room thermostat in accordance with the instruction sheet packed in the box with the thermostat. Run the thermostat lead wires through the control entry opening ***(Figure F.2. – A: Electrical and Piping Routing)*** and connect to the low voltage thermostat connections (see ***Appendix G*** for wiring diagrams and ***Section F.1.*** for T-Stat field connections). Never install the thermostat on an outside wall or where it will be influenced by drafts, concealed hot or cold water pipes or ducts, lighting fixtures, radiation from fireplace, sun rays, lamps, televisions, radios or air streams from registers. Refer to instructions packed with the thermostat for "heater" selection or adjustment.

F.1. T-Stat field connections

F.1.1. Misc. Connections

Refer to ***Appendix G*** for the unit wiring diagrams and to ***Figure E.3. – A: Typical Thermostat Wiring.***

Figure F.1.1. - A: IFC Terminal Locations

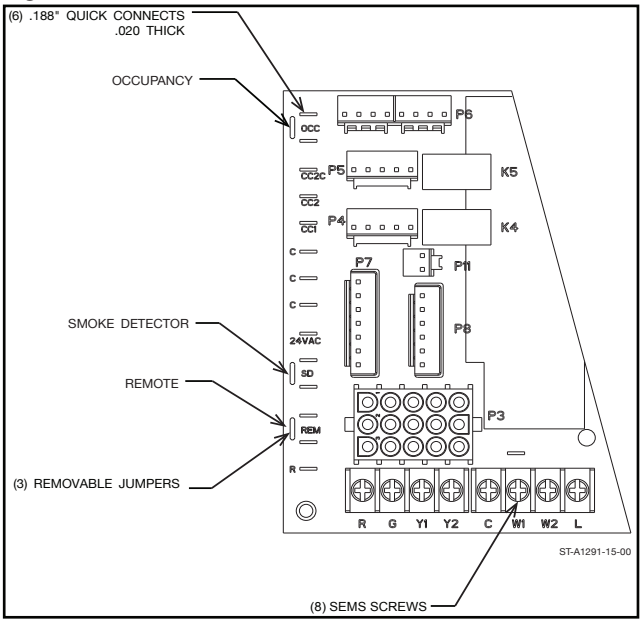

F.1.2. Occupancy connections / Remote connections / Etc

Figure F.1.2. – A: Occupancy and Remote Connections

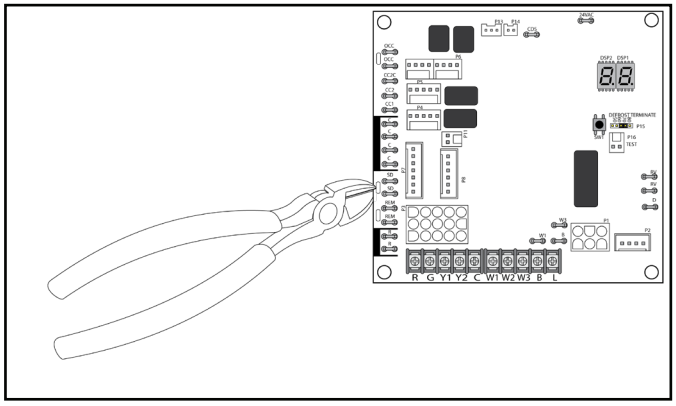

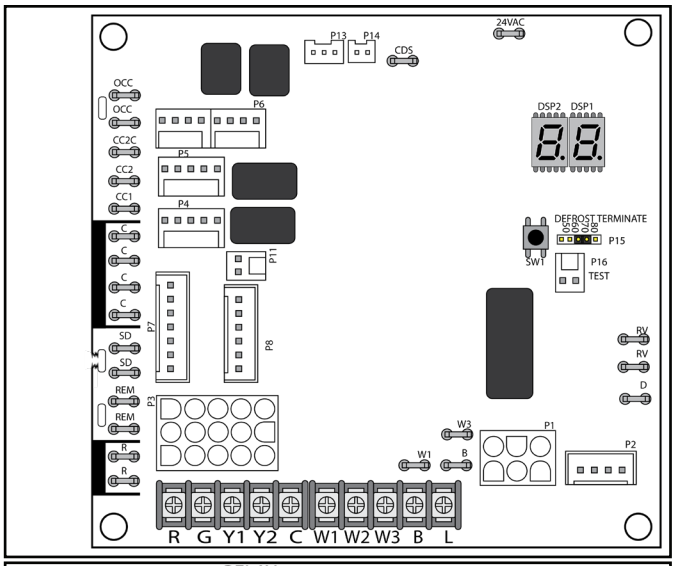

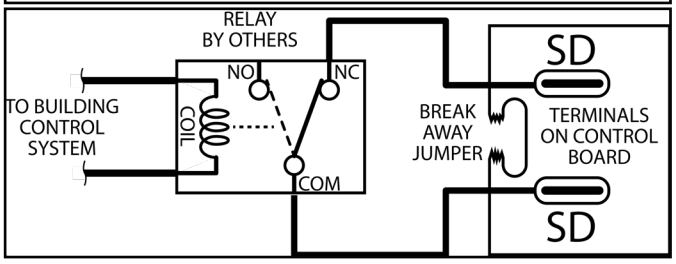

NOTE: This is an example of breaking the jumper for Smoke Detector connections, apply the same process for the Occupancy and/or Remote connections.

These features are only available on the Non-DDC Furnace, Heat pump, or cooling only control boards.

OCC – Occupancy Control. This feature shuts down the dampers on the economizer or motorized damper option when outdoor/fresh air is not required for the building. Locate the terminals at the left side of the board mark "OCC". See Figure ***F.1.2. – A: Occupancy and Remote Connetions*** for reference.

F. CONTROL / THERMOSTAT WIRING

For connecting Remote Smoke Detectors or Fire Control Panels to this control DO NOT break the 24VAC to the thermostat or from the power supply transformer. Either could cause an undersirable operating condition that would not shut the unit down in the event of an emergency situation. See the instructions for the type of control board this unit is equipped with.

Using cutters or a small screw driver, break the edge of the board between the to terminals marked with “OCC”. Use 3/16” blade connector, and a minimum of 18AWG wire to connect to a Normally Closed Dry Contact Relay or Switch. Do not connect multiple control boards to the same dry contact relay or switch.

REM – Remote Shutdown Control. This feature allows the unit to be turned off remotely ignoring the thermostat calls for cooling or heat. Locate the terminals at the left side of the board mark “REM”. See Figure ***F.1.2. – A: Occupancy and Remote Connetions*** for reference.

Using cutters or a small screw driver, break the edge of the board between the to terminals marked with “REM”. Use 3/16” blade connector, and a minimum of 18AWG wire to connect to a Normally Closed Dry Contact Relay or Switch. Do not connect multiple control boards to the same dry contact relay or switch.

F.1.3. Connecting a Smoke Detector

F.1.3.1. IFC Connection

SD – Remote Smoke Detection. This feature allows for the proper shutdown of the controls in the event of an emergency situation. Locate the terminals at the left side of the board mark “SD”. See ***Figure F.1.2. – A: Occupancy and Remote Connetions*** for reference.

Using cutters or a small screw driver, break the edge of the board between the to terminals marked with “SD”. Use 3/16” blade connector, and a minimum of 18AWG wire to connect to a Normally Closed Dry Contact Relay, or in common Fire Control Panels and Smoke Detectors, the Auxilary Connections for C and NC. See the instructions for the remote devices. Do not connect multiple control boards to the same dry contact relay.

F.1.3.2. DDC Control Connection

In the air-filter section or on the side economizer, locate the 12-pin Molex jumper plug with the long Red, short Yellow and Orange wire loops; see ***Figure F.1.3.2. - A*** for reference. Cut the Red wire loop and connect these to a minimum of 18AWG wire that will be connected to a Normally Closed Dry Contact Relay, or in common Fire Control Panels and Smoke Detectors, the Auxilary Connections for C and NC. See the instructions for the remote devices. Do not connect multiple control boards to the same dry contact relay.

Figure F.1.5.3. – A: Wiring Harness location in Air-Filter Section

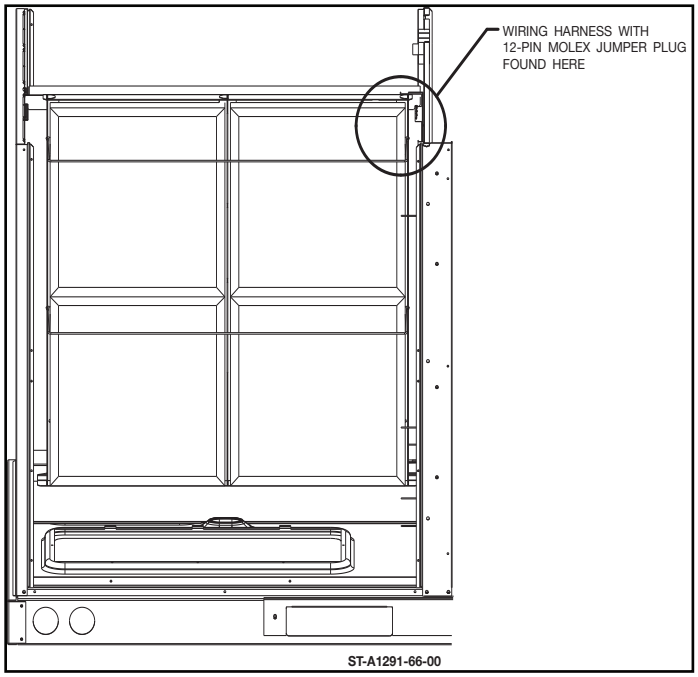

F.1.4. Building Management / Control Connections using DDC –

In an application where a third party building management / controls are in use or will be incorporated, units with the integral Rooftop Unit Controller (RTU-C) are communication compatible with the system that supports the BACnet Application Specific Controller device profile, LonMark Space Comfort Controller functional profile, or LonMark Discharge Air Controller functional profile. This is accomplished with a field installed BACnet or LonMark communication module. Refer to the Clear control/DDC manual for more detail; **Manufacturer Part number: 92-103249-01.**

F.2. Routing Control wiring

Figure F.2. – A: Electrical and Piping Routing

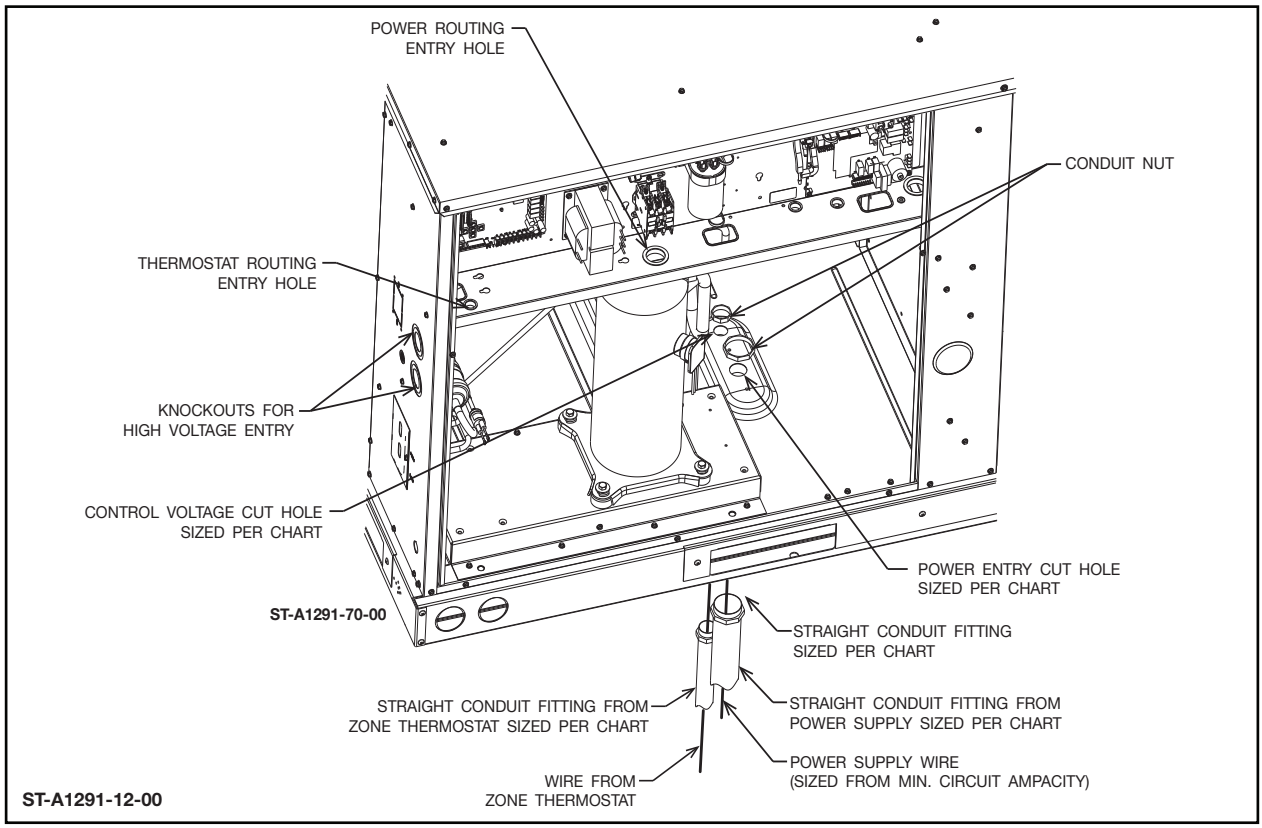

Figure F.2. – B: Hole Sizing for Conduit

	WIRE SIZE, AWG											
	14	12	10	8	6	4	3	2	1	0	00	000
CONDUIT SIZE	1/2”	1/2”	1/2”	3/4”	1”	1”	1-1/4”	1-1/4”	1-1/2”	1-1/2”	2”	2”
HOLE SIZE	7/8”	7/8”	7/8”	1-31/32”	1-23/64”	1-23/64”	1-23/32”	1-23/32”	1-31/32”	1-31/32”	2-15/32”	2-15/32”

NOTES: 1. DETERMINE REQUIRED WIRE SIZE FROM MINIMUM CIRCUIT AMPACITY SHOWN IN INSTALLATION & OPERATING INSTRUCTION.
2. BOTTOM POWER ENTRY WILL NOT ACCOMMODATE WIRE LARGER THAN #2 AWG (SHADED AREA).

F.3. Measuring Control Voltage Loads

Use a voltmeter to measure the low voltage and low voltage amp draws during operation. Accessories such as remote smoke detectors and excessive wire length can increase the amp draw on the low voltage wiring. Verify that the total amp draw on the 24Vac side is less than 0.3A in full operation.

H. ELECTRIC HEAT

Figure H. - A: Electric Heat with Single Point Wiring

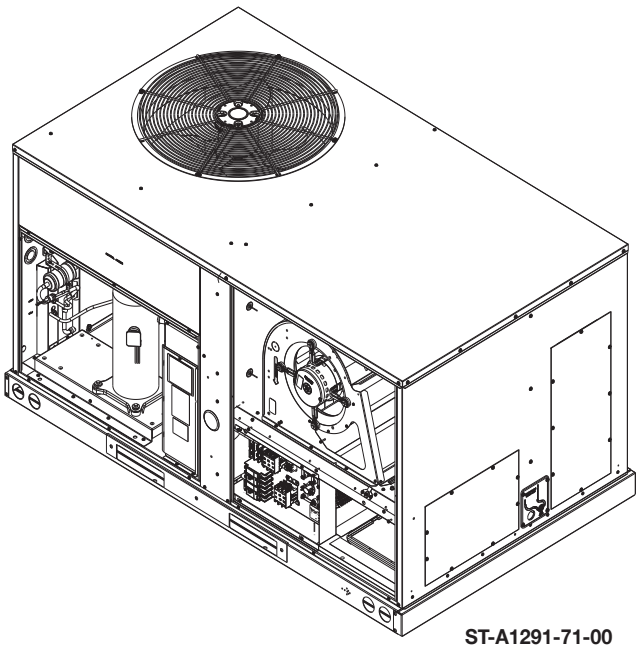

ST-A1291-71-00

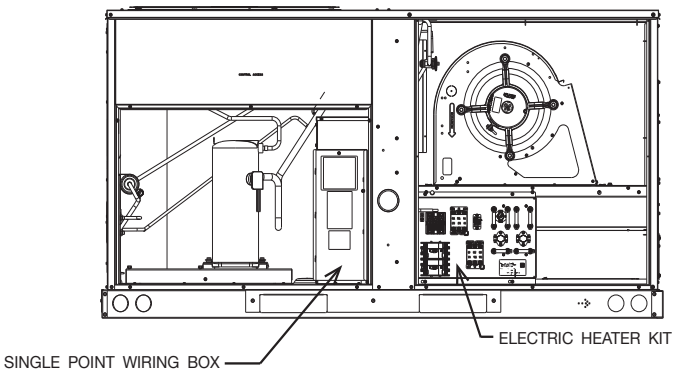

ST-A1291-71-00

H.1. FACTORY INSTALLED ELECTRIC HEAT

Units shipped with factory installed electric heat will come with a separate document (included in the parts bag) with details regarding the electric heater kits. Refer to this document for diagrams and additional info. Refer to ***Appendix E*** for heater kit characteristics such as Minimum Circuit Ampacity and Max Fuse sizes.

H.2. FIELD INSTALLED ELECTRIC HEAT

Electric heater kits will be shipped with their own installation document in the box. Use the instructions supplied with the kit for best practice. Install all electric heat kits in accordance with the National Electric Code. Refer to ***Appendix E*** for manufacturer-approved heater kit characteristics such as Minimum Circuit Ampacity and Max Fuse sizes.

J. STARTUP AND OPERATION

J.1. Final Inspection

J.1.1. Check for Refrigerant Leaks

Inspect the unit for any damage to the coils and tubing that could cause a leak.

J.1.2. Check Level of Unit

Refer to ***Section C.6.2.*** for setting/checking the level of the unit.

J.1.3. Check Electrical Connections For Proper Torque

Use an Inch Pound rated torque wrench to ensure proper torque. DO NOT CONFUSE THIS WITH A FOOT POUND RATED WRENCH, Damage will occur.

Recommended torques for securing wiring:

- To the contactor: 40 in-lb.
- From the T-stat to the control board: 8.0 in-lb.

Figure J.1.3. – A: Where to Wire for Thermostat

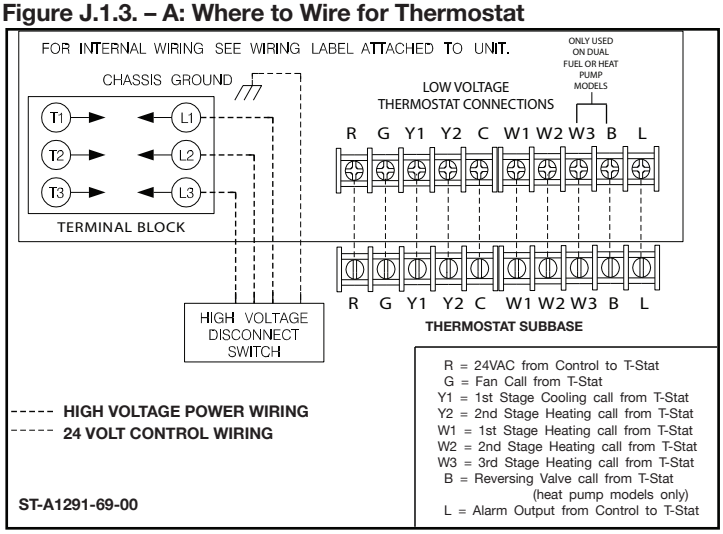

J.1.4. Check Control Cables For Proper Connection

Verify all cables are seated and connected in the unit as some might come loose during shipping and transport.

J.1.5. Check Filter Installation

Verify that filters are seated and oriented correctly in the unit as some might come displaced during shipping and transport. Refer to ***Section D.3.*** for more information on filters and filter installation.

J.1.6. Check Condensate Drain installation

Verify the Condesate Drain Trap is a minium of 3 inches deep, plus the Blower Fan Static Pressure. Verify the Outlet of the drain trap is a minimum of 3 inches below the outlet of the drain pan. Ensure the outlet of the trap is routed to a suitable drain location as required by local code. Refer to ***Section C.5*** and ***Figure C.5.1*** – A for more information.

J.1.7. Check Blower Compartment for Accessories

Open all compartments to ensure there are no tools or other misc parts remaining in the unit from setup. This is most important on the blower section to avoid damage to the blower assembly.

J.2. Turning on Power for the First time

J.2.1. Checking for Proper 3-Phase Voltage

Verify that proper power has been supplied to the unit. This is critical for correct operation of the compressor.

J.2.2. Check For Proper Phase

Verify that the compressor is running correctly.

J.2.2.1. Standard Blower Rotation

As a reminder, all units with an ECM-drive blower motor will have the correct rotation even if the phase to the unit is wired incorrectly. See ***Section E.3.4. Checking Phase and Motor Rotation*** for more information.

J.2.2.2. VFD Blower Rotation

As a reminder, all units with VFD driven blower motor will have the correct rotation even if the phase to the unit is wired incorrectly. See ***Section E.3.4.1. Checking Phase with VFD Drive*** for more information.

J.2.3. Checking Low (Control) Voltage

Use a voltmeter to measure the low voltage and low voltage amp draws during operation. Accessories such as remote smoke detectors and excessive wire length can increase the amp draw on the low voltage wiring. Verify that the total amp draw on the 24Vac side is less than 0.3A in full operation. Refer to ***figure F. – A*** for proper low voltage wire lengths.

J. STARTUP AND OPERATION

J.3. Checking and Adjusting Air Flow

For Economizer and Diffuser Pressure Drop Data, please refer to the end of ***Appendix C: Airflow Performance Data.***

Figure J.3. – A: Static Pressure and Air Temp Measurement Location

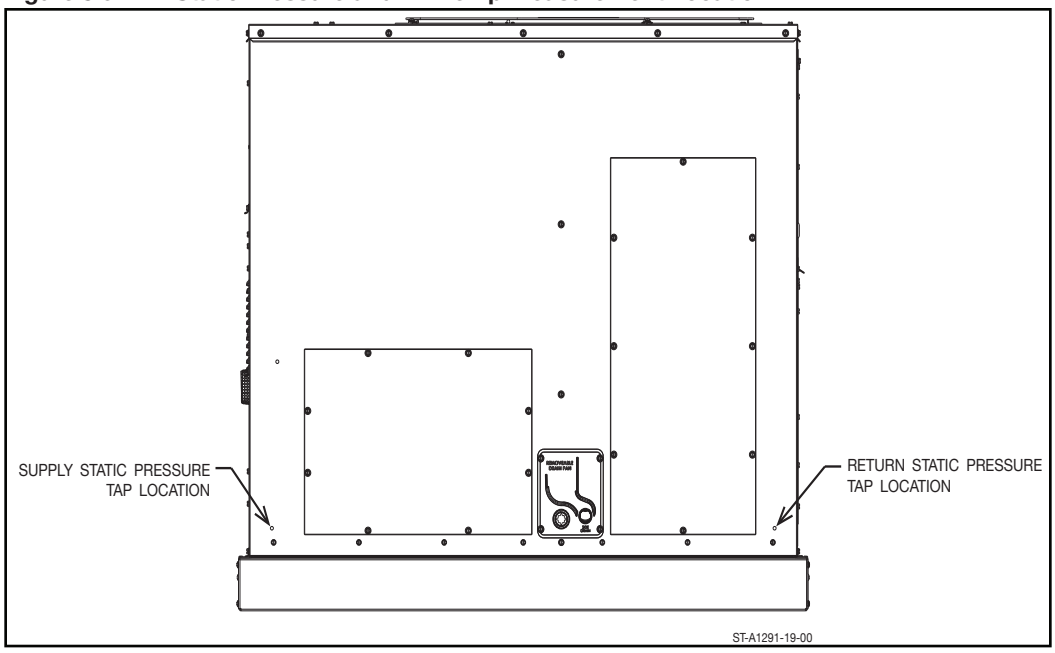

J.3.1. Static Pressures and Measurements

•To measure the static pressure of the system, locate the locating dimples near the supply/return duct openings, and drill a hole to the size necessary for the test probe. The location of these dimples are shown in ***Figure J.3. - A***.

• NOTE: After taking airflow measurements, seal these openings per best practice to prevent airflow leakage and water entry into the unit.

• NOTE: Drilling test tap locations in other panels or doors could put the test probe in a turbulent zone providing false readings.

J.3.1.1. Using Tools

Use a water monometer to measure the static pressure of the blower. Insert the meter probe into the tap location. Make sure any economizer or outside air dampers are closed and run the fan at the maximum, full speed setting. Record the reading for the return air and supply air separately.

J.3.2. Air Flow Measurements and Adjustments

- Measure the supply/return static to get the unit static pressure by drilling out the dimple locations shown in ***Figure J.3. - A.***
- Take the measured static pressure and match to the static listed on the airflow table to find your CFM.
- For non-DDC units, the unit ships standard with the orange wire (wire 607) having a quick-connect towards the control board-end of the harness.

  o If more airflow is needed, unplug the orange wire and reattach to the the T-connection on the yellow wire (yellow 608). Refer to ***Figure J.3.2. – A.***

Figure J.3.2. – A: How to Increase Airflow for non-DDC Units

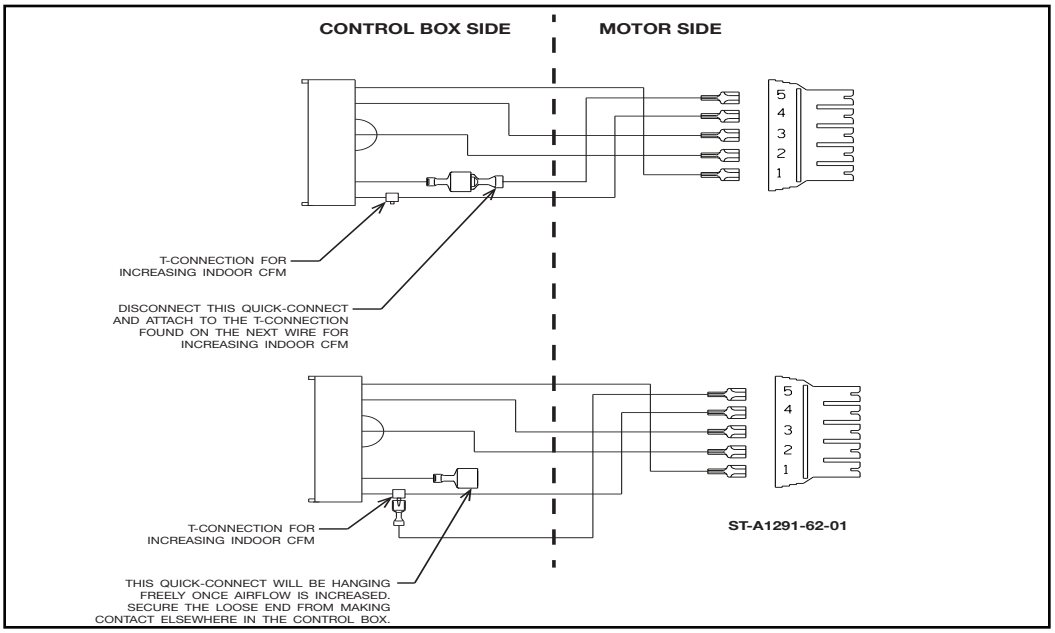

- For DDC units, the unit ships with the orange wire for the indoor fan connected to the CC2 terminal on the board.

  o If more airflow is needed, remove the wire from CC2 and connect to the CC1 terminal. Refer to ***Figure J.3.2. – B***.

Figure J.3.2. – B: How to Increase Airflow for DDC Units

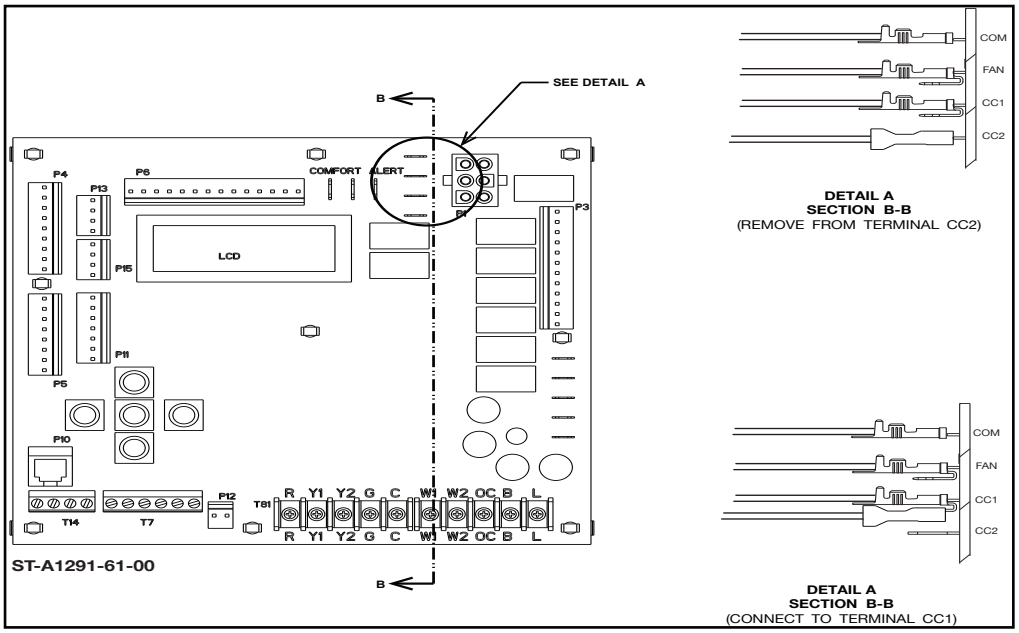

J.3.2.1. Increasing Air Flow – Blower Motor Controller on 5 Ton High-Static 460V and all 6 Ton units.

If more airflow is needed for a 5 ton High Static 460V or any 6 ton unit, the procedure will be the same as the products without the Blower Motor Controller. See ***Section J.3.2. Airflow Measurements and Adjustments*** for details.

J.3.2.2. Adjusting Fresh Air Flow with Economizer

See the above sections for measuring airflow, and refer to the I&O included with the Economizers for more information on adjusting airflow.

Manufacturer I&O Part numbers:

- Downflow: 92-107192-17
- Downflow DDC: 92-107192-19
- Horizontal: 92-107192-18
- Horizontal DDC: 92-107192-20

J.3.2.3. Adjusting Fresh Air Flow with Damper

All dampers are field install accessories. See the above sections for measuring airflow, and refer to the I&O included with the fresh air dampers for more information on adjusting airflow. Refer to local building codes for any fresh air requirements.

Manufacturer I&O Part numbers:

- Manual Fresh Air Damper: 92-107192-25
- Motorized Fresh Air Damper: 92-107192-26

J.4. Checking Cooling Operation

Note: In the below section, first and second stage cooling applies to ONLY the 6 ton units. For 3-5T units, only first stage applies.

COOLING SEQUENCE OF OPERATION

A. Call for cooling

1. The zone thermostat contacts close, and a call for cooling is initiated.

2. Inputs ‘Y1’ and ‘G’ to the control are energized.

3. The control senses input to ‘Y1’ and ‘G’. After a 1sec delay, the control energizes both the indoor blower and first stage compressor.

4. The control enters normal operating loop were all inputs are continuously checked.

5. Zone thermostat is satisfied.

6. The blower will continue to run for a preset period of time after the zone thermostat is satisfied.

7. The control goes into standby mode displaying a “O”.

B. Call for second stage cooling. After first stage cooling established; starting from A6.

1. If a call for second stage cooling is initiated after a call for first stage cooling is established, the control energizes ‘Y2’ and energizes the second stage compressor.

2. Then the control enters the normal operating loop where all inputs are continuously checked.

C. Second stage satisfied and first stage still called for; starting from B2.

1. ‘Y2’ is de-energized and the second compressor stage is de-energized.

D. First stage and second stage called simultaneously.

1. The zone thermostat contacts close, and a call for first and second stage cooling is initiated.

2. Inputs ‘Y1’, ‘Y2’ and ‘G’ to the control are energized.

3. The control senses ‘Y1’, ‘Y2’ and ‘G’. After a 1sec delay, the control energizes the indoor blower, and the first and second compressor stages.

E. First stage and second stage removed simultaneously.

1. Upon a loss of ‘Y1’ and ‘Y2’, the compressor is de-energized. The control de-energizes the indoor blower relay, and cuts off the blower after an indoor blower delay.

2. The control goes into standby mode displaying a “O”.

CONTINUOUS FAN MODE

A ‘G’ input only indicates a zone thermostat call for continuous indoor blower operation.

TIME DELAY BYPASS for non-DDC units

The Time Delay Bypass resets the ICC (Integrated Compressor Control) from any lockout mode or bypasses compressor anti-short cycle delay timer. To bypass the time delay, press the SW1 button with an an insulated probe for 1sec and then release.

FAULT RECALL OPERATION for non-DDC units

To enter FAULT RECALL mode, press the SW1 button with an insulated probe for 2sec and release. Upon entering and exiting the FAULT RECALL mode, the top bottom segments of the 7-segment display will be activated. The ICC will automatically scroll through the stored faults on the 7-segment display. Each fault is displayed one time with the top segment of the 7-segment

display activated between faults. Each fault is displayed with the most recent fault displayed first. An “O” will be displayed when no faults are stored. The ICC will automatically exit the FAULT RECALL mode after displaying stored faults.

An example of one LPC fault and one HPC fault scrolled on the display is shown as: ¯21¯23¯

CLEAR FAULT HISTORY for non-DDC units

To clear FAULT HISTORY, press the SW1 button with an insulated probe for 5sec and release. The top and bottom segments of the 7-segment display will be activated and flash to indicate the history has been cleared.

Example: ======

TEST MODE for DDC Units

For units with DDC, there is a “Run Test” mode that will aid in dignostics during installation. Please refer to the CLEAR CONTROL MANUAL for more info; Manufacturer Part Number: 92-103249-01

J.4.1. Checking Refrigerant Pressures

To check refrigerant pressures, attach R410a manifold gauges to the high/lo service ports. The upper port is the high pressure port, and the lower is the low pressure port. **BE SURE TO USE ZERO LOSS FITTINGS WHILE MEASURING PRESSURE; ANY LOSS OF CHARGE MAY IMPACT PERFORMANCE.**

See section ***C.2.1.Tools Required for Installing and Servicing R-410A Models.***

Figure J.4.1. –A: Service Port Location

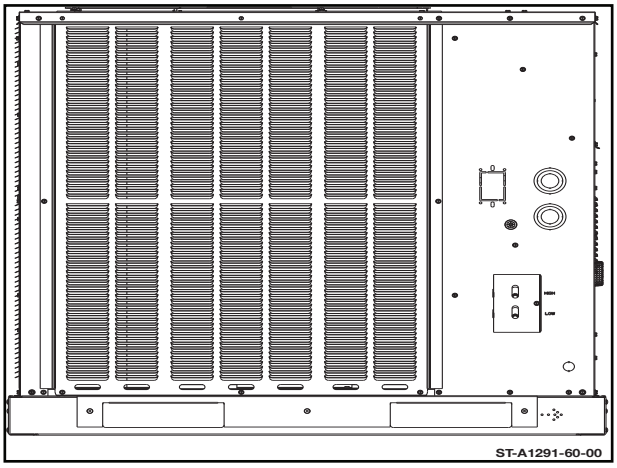

J.4.1.1. Refrigerant Pressure Charts

See ***Appendix F*** towards the end of this manual for Refrigerant Pressure Charts.

J.4.2. Checking Sub Cooling for Adjusting Charge Weight

See ***Appendix F*** towards the end of this manual for Refrigerant Charging Charts.

NOTE: This procedure is very important for optimizing this product’s performance.

How to check the unit’s subcooling to fine-tune refrigerant charge:

1. The Indoor ambient temperature must be between 72 °F and 82 °F dry bulb at the indoor coil.

2. Confirm the indoor air supply is at the rated CFM listed in ***Appendix A***.

3. Allow the system to run long enough for temperatures and pressures to stabilize; at least fifteen minutes.

4. Measure liquid pressure and line temperature at the liquid line service port (refer to section ***J.4.2.1.*** below for the liquid line temperature measurement location). USE ZERO LOSS FITTINGS WHILE MEASURING PRESSURE; ANY LOSS OF CHARGE MAY IMPACT PERFORMANCE.

5. To find the saturation temperature at the measured pressure, subtract the measured liquid line temperature from the saturation pressure to get the sub-cooling.

6. Check if the Sub-Cooling is within +/- 1.5 °F tolerance.

7. If the sub-cooling values are significantly different (> 20 psig) from those listed on the table in Appendix F, there may be an airflow or component issue. Refer to section M. Diagnostics for more information.

J.4.2.1. Measuring Air Temperature and Liquid Line Temperature

Measuring air temperature:

1. Insert a thermometer in the supply air duct as close to the unit as possible.

2. Insert a thermometer in the return air duct as close to the filters as possible.

3. If preferred, use the locations shown in ***Figure J.3. – A: Static Pressure and Air Temp Measurement Location*** instead of the supply/return ductwork.

4. Operate the unit for a minimum of 15 minutes in cooling mode.

5. When the thermometer in the supply air duct stops changing (approximately five minutes), subtract the return air temperature from the supply air temperature. This is the cooling mode temperature difference.

If the measured temperature difference is not reducing, or if the return air is not reaching the thermostat set point, the air flow is too low. Airflow must be increased by either removing the restrictions in the duct system, or by changing the air flow. See ***Section J.3.2. Air Flow Measurements and Adjustments*** for changing air flow.

IMPORTANT: Some high-efficiency filters have a greater than normal resistance to airflow. This can negatively affect airflow. BE SURE TO CHECK THE AIRFLOW if using any filter other than the factory-provided filter.

Measuring line temperature:

1. Attach a thermometer or thermocouple to the liquid refrigerant line right after the filter-dryer. See ***Figure J.4.2.1. - A***.

2. Operate the unit for a minimum of 15 minutes in cooling mode.

3. When the measurement of the temperature stops changing (approximately five minutes), record the temperature.

Figure J.4.2.1. – A: Line Temperature Measurement Location

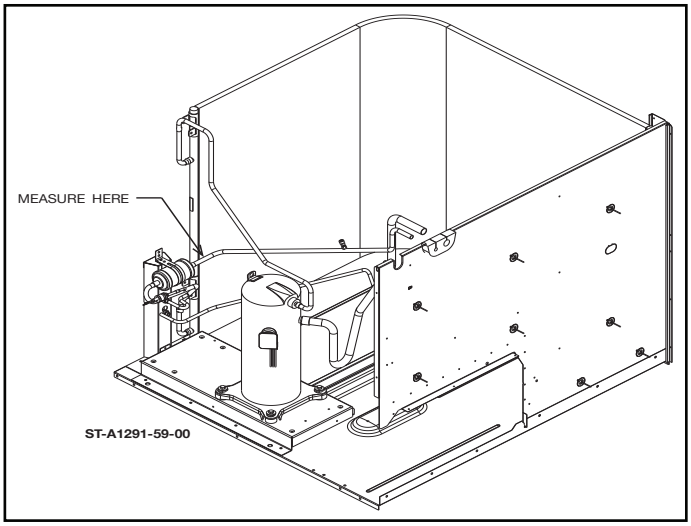

J.4.3. Measuring Compressor Electrical Loads

See ***Appendix B*** towards the end of this manual for Compressor Electrical Data.

J.5. Checking Electric Heat Operation

Electric heater kits will have their own separate instructional document. For factory installed heater kits the document will be found in the parts bag, and for field installed heater kits the document will be found in the box. Refer to these documents for any info regarding checking electric heat operation.

K. TEST AND BALANCE

K.1. Air Flow Charts and Information

See ***Appendix C*** towards the end of this manual for Air Flow Performance Data.

K.2. Air Flow Adjustments

K.2.1. Blower Speed for 3-5 Ton Units

See ***Section J.3.2. Air Flow Measurements and Adjustments*** on how to increase the blower speed and increase airflow for the 3-5T units.

K.2.2. Blower Motor Controller for 5 ton High Static 460V and all 6 ton units.

See ***Section J.3.2. Air Flow Measurements and Adjustments*** on how to increase the blower speed and increase airflow on the 5 Ton High Static 460V and 6 Ton units that use a Blower Motor Controller.

K.2.3. Economizer Adjustments

Do not Fix a minimum postion on an economizer, set the minimum position through the control board only. See the instructions provided with the economizer for more info. The part numbers for these instructions are listed in section ***D.4.1. Economizer Information.***

M. HUMIDIDRY

M.1 Dehumidification System Information

With the factory installed dehumidification option, in addition to a thermostat or space temperature sensor that is normally present,

an indoor relative humidity sensor is installed in the occupied space and connected to the Rooftop Unit Controller (RTU-C) which then controls the capacity of the cooling coil to remove moisture from the supply air and maintain space relative humidity below an adjustable limit visible on the RTU-C display.

The default value is the ASHRAE recommended limit of 60% RH. With this option, a refrigerant reheat coil is installed downstream from the evaporator coil. When the space humidity is too

high and reheat is energized, this coil uses some of the heat that is normally rejected to the outside by the condenser coil to instead reheat the cold air from the evaporator coil just enough

to avoid overcooling the space. Providing “neutral air” to the occupied space.

Because the demand for dehumidification can be different from the cooling demand, the unit will first satisfy the demand for cooling and then if the space humidity is still too high, dehumidification mode is energized. When in dehumidification mode, the supply air leaving the unit will be near the entering air temperature,

but at a much lower humidity. The unit will exit the dehumidification mode when the humidity set point is satisfied; or if the load is increased, it will return to normal cooling mode.

Reheat is not available during the gas-heating mode.

Figure M.1. – A

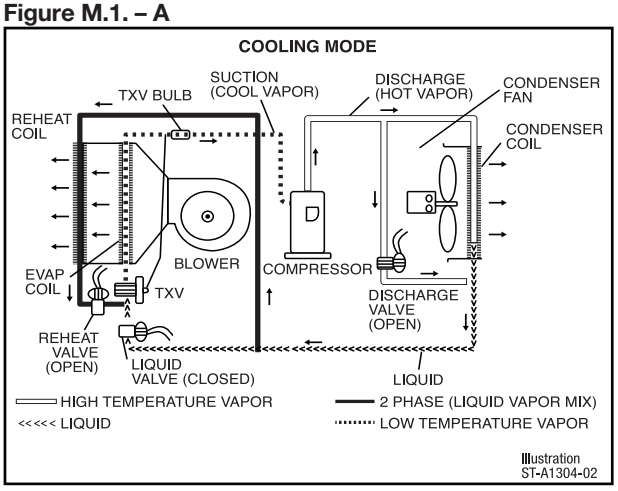

Figure M.1. - A shows the refrigerant path during the normal cooling mode. The liquid refrigerant leaves the TXV with the sudden pressure drop causing the liquid to expand to a vapor and absorbing the heat from the supply air going through the evaporator coil. The refrigerant vapor then travels to the compressor where it is elevated to a higher pressure and temperature.

The superheated refrigerant vapor next carries the heat to the outside coil where the heat is then rejected and the refrigerant condenses into a subcooled liquid where the process repeats itself.

Figure M.1. – B

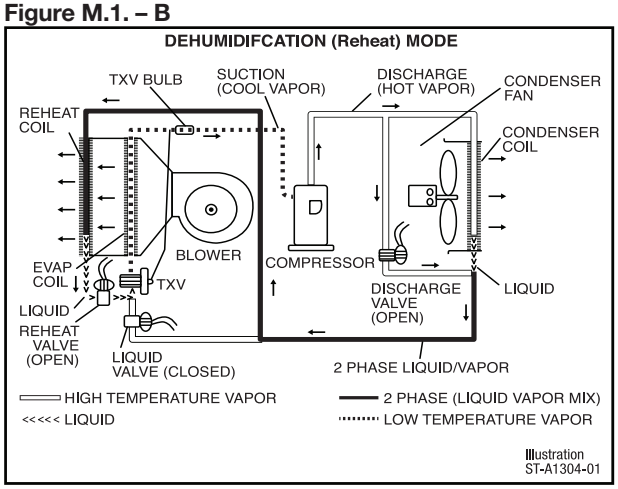

Figure M.1. - B shows the refrigerant path during the dehumidification mode. When the reheat cycle is energized by the RTU-C, a solenoid valve downstream of the reheat coil opens, a solenoid valve ahead of the TXV closes, and a solenoid valve in the compressor discharge line opens. The liquid refrigerant leaves the TXV with the sudden pressure drop causing the liquid to expand to a vapor and absorbing the heat from the supply air going through the evaporator coil. The refrigerant vapor then travels to the compressor where it is elevated to a higher pressure and temperature. The refrigerant next carries the heat to a parallel path between the outside condenser coil and a bypass circuit.

Some of the heat is rejected outdoors. The ratio of heat rejected outdoors versus indoors is controlled by an outdoor fan motor controller (OFMC) on the outdoor fan that monitors the liquid line temperature of the outdoor coil. The OFMC is installed in the unit control panel. This 2-phase refrigerant vapor is then sent to the reheat coil. As the refrigerant travels through the

reheat coil it condenses into a subcooled liquid where the process repeats itself

M.2 Humidity Sensor Installation

The Humidity control unit requires the use of a zone mounted humidity sensor. The sensor should be located in the conditioned space, approximately 5ft from the floor, on an interior wall. Take care to locate it away from direct sunlight and away from air flow from vents or drafts from doors. The humidity sensors output is a 0-10VDC signal and will be connected to the DDC Control.

The Rheem ZNS-5 meets the requirement and includes an optional space temperature sensor. The control wiring should be a minimum of 18AWG Solid Copper wire with 5 Conductors and is connected from the DDC Control to the sensor as follows:

RED = R to V+ (+24VAC)

GREEN = Field Confg 1 & 2 (Right most terminal) to GROUND

BLUE = Field Config 2 (3rd terminal from right) to VOut

WHITE = S & P (Left most terminal) to Temp -

YELLOW = S (2nd terminal from left) to Temp+

See the installation instructions for additional details.

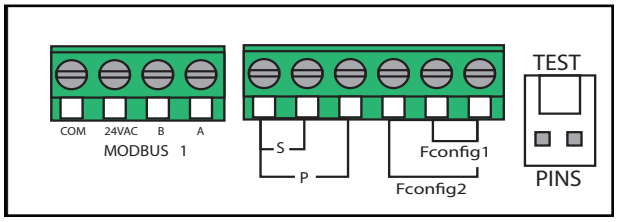

ZNS-5 HUMIDITY/TEMPERATURE SENSOR

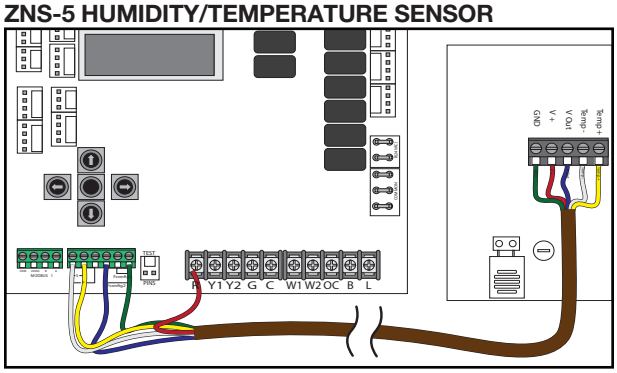

HONEYWELL DUCT MOUNTED HUMIDITY SENSOR

This optional wires the same except the temperature sensor connects

directly to a Honeywell Thermostat.

RED = R to V+ (+24VAC)

GREEN = Field Confg 1 & 2 (Right most terminal) to GROUND

BLUE = Field Config 2 (3rd terminal from right) to VOut

Other = Honeywell S- Terminal to Yellow Wire

Other = Honeywell S+ Terminal to Green Wire

See the installation instructions for additional details.

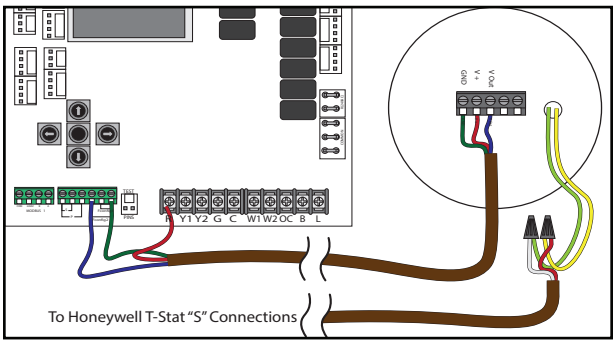

M. HUMIDIDRY

M.3 Humidity Control Settings and Configuration

The Clear Control is designed to operate in conjunction with the zone sensor discussed earlier in the guide. These are the steps to verify the zone sensor and adjust the humidity set-point and operating modes. The system can be programmed to a humidity level as low as 35%, and can be set to run dehumidification as part of the cooling cycle or as a stand alone system regardless of the cooling or fan call status from the thermostat, recommended.

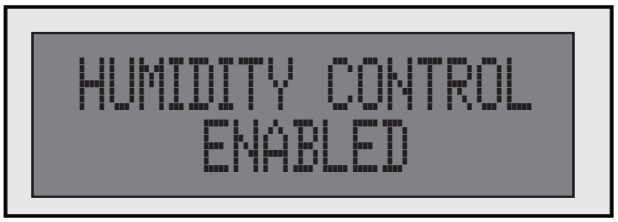

NOTICE: The system will not operate the humidity control when the outdoor ambient temperature is below 60°F, this is because the humidity control uses hot refrigerant bypassed from the outdoor coil,. When the ambient temperature is too low, insufficient heat will be retained in the refrigerant to properly operate the Reheat system for proper dehumidification. The Reheat system in this packaged unit is not designed for industrial or process applications, it is intended for human comfort zones.

Navigate through the Clear Control menu to “Humidity Control” it should say Enabled. If it says “Disabled” press the Enter button twice to Enable rh Control.

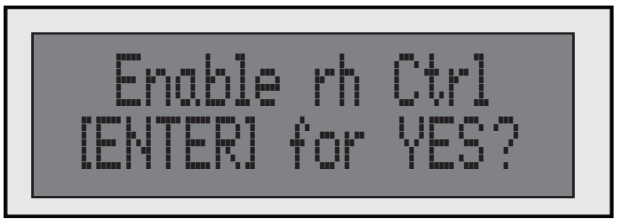

Next set the desired Relative Humidity Set-point. This set-point will be where the control will run the associated dehumidification cycles to bring the humidity in the zone down to this percentage.

Now set the Reheat Mode, there are three functions to choose from, Reheat in Occupied, will only run dehumidification when there is a Fan or Cooling Call. Reheat in Unoccupied, will on run dehumidification when there is no fan or cooling call; Reheat ALL, (recommended) will run reheat based on the humidity reading regardless of the thermostat operation.

Checking the Humidity Sensor reading, Navigate to Humidity Control then down to Indoor rh, this will display the reading from the humidity zone sensor. If this shows “4%” then it means that the zone sensor is not connected properly or malfunctioning.

Verify a 0-10VDC signal across the Field Cnfg 2 terminals on the control board. 10VDC = 100%, 5VDC - 50%.

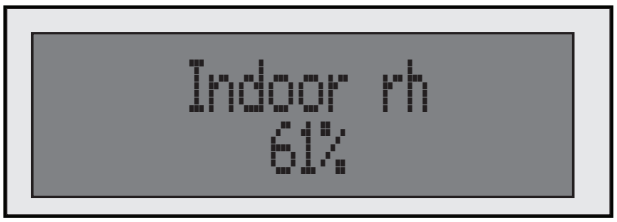

The humidity control system is also equipped with an Outdoor Fan Motor Controller, OFMC, this controller changes the speed of the outdoor fans to allow for more or less heat in the bypassed refrigerant used to operate the reheat system. Adjustments to the OFMC are not needed unless undesirable operation occurs.

Consult the Installation instructions provided with the system for details on the OFMC operation and adjustments.

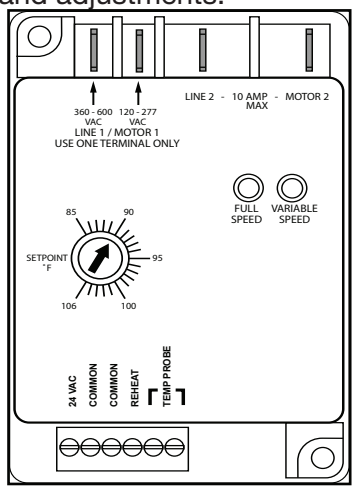

N.1. Diagnostics Chart

N.1.1.Cooling Diagnostics Chart

⚠ WARNING

DISCONNECT ALL POWER TO UNIT BEFORE SERVICING. CONTACTOR MAY BREAK ONLY ONE SIDE. FAILURE TO SHUT OFF POWER CAN CAUSE ELECTRICAL SHOCK RESULTING IN PERSONAL INJURY OR DEATH.

SYMPTOM	POSSIBLE CAUSE	REMEDY
Unit will not run	• Power off or loose electrical connection	• Check for correct voltage at compressor contactor in control box
	• Thermostat out of calibration-set too high	• Reset
	• Failed contactor	• Check for 24 volts at contactor coil - replace if contacts are open
	• Blown fuses	• Replace fuses
	• Transformer defective	• Check wiring-replace transformer
	• High pressure control open (if provided)	• Reset-also see high head pressure remedy-The high pressure control opens at 450 PSIG
	• Interconnecting low voltage wiring damaged	• Replace thermostat wiring
Condenser fan runs, compressor doesn't	• Loose connection	• Check for correct voltage at compressor - check & tighten all connections
	• Compressor stuck, grounded or open motor winding open internal overload.	• Wait at least 2 hours for overload to reset. If still open, replace the compressor.
	• Low voltage condition	At compressor terminals, voltage must be within 10% of rating plate volts when unit is operating.
	• Low voltage condition	• Add start kit components
Insufficient cooling	• Improperly sized unit	• Recalculate load
	• Improper airflow	• Check - should be approximately 400 CFM per ton.
	• Incorrect refrigerant charge	• Charge per procedure attached to unit service panel.
	• Air, non-condensibles or moisture in system	• Recover refrigerant, evacuate & recharge, add filter drier
	• Incorrect voltage	• At compressor terminals, voltage must be within 10% of rating plate volts when unit is operating.
Compressor short cycles	• Incorrect voltage	• At compressor terminals, voltage must be ± 10% of nameplate marking when unit is operating.
	• Defective overload protector	• Replace - check for correct voltage
	• Refrigerant undercharge	• Add refrigerant
Registers sweat	• Low evaporator airflow	• Increase speed of blower or reduce restriction - replace air filter
High head-low vapor pressures	• Restriction in liquid line, expansion device or filter drier	• Remove or replace defective component
	• Flow check piston size too small	• Change to correct size piston
	• Incorrect capillary tubes	• Change coil assembly
	• TXV does not open	• Replace TXV
High head-high or normal vapor pressure - Cooling mode	• Dirty condenser coil	• Clean coil
	• Refrigerant overcharge	• Correct system charge
	• Condenser fan not running	• Repair or replace
	• Air or non-condensibles in system	• Recover refrigerant, evacuate & recharge
Low head-high vapor pressures	• Defective Compressor valves	• Replace compressor
	• Incorrect capillary tubes	• Replace coil assembly
Low vapor - cool compressor - iced evaporator coil	• Low evaporator airflow	• Increase speed of blower or reduce restriction - replace air filter
	• Operating below 65°F outdoors	• Add Low Ambient Kit
	• Moisture in system	• Recover refrigerant - evacuate & recharge - add filter drier
High vapor pressure	• Excessive load	• Recheck load calculation
	• Defective compressor	• Replace
Fluctuating head & vapor pressures	• TXV hunting	• Check TXV bulb clamp - check air distribution on coil - replace TXV
	• Air or non-condensibles in system	• Recover refrigerant, evacuate & recharge
Gurgle or pulsing noise at expansion device or liquid line	• Air or non-condensibles in system	• Recover refrigerant, evacuate & recharge

N. DIAGNOSTICS

N.2. Alarm Codes – Full List

IFC Alarm Codes		
CODE	**Description**	**FAULT LEVEL**
0	STAND BY	None
c	COMPRESSOR ON - Low (Flashing if in time delay)	None
C	COMPRESSOR ON - High (Flashing if in time delay)	None
E	Economizer Cooling - No Compressor	None
F	CONTINUOUS FAN	None
h	GAS HEAT ON - LOW-FIRE	None
H	GAS HEAT ON -HIGH-FIRE	None
4	Comfort Alert Code 4 for Compressor Circuit 1	Shutdown
5	Comfort Alert Code 5 for Compressor Circuit 1	Shutdown
6	Comfort Alert Code 6 for Compressor Circuit 1	Shutdown
7	Comfort Alert Code 7 for Compressor Circuit 1	Shutdown
8	Comfort Alert Code 8 for Compressor Circuit 1	Shutdown
9	Comfort Alert Code 9 for Compressor Circuit 1	Shutdown
11	FAILED IGNITION	Problem
12	LO FLAME SENSE	Warning
13	FLAME LOST	Problem
14	UNEXPECTED FLAME	Shutdown
15	HIGH-FIRE GAS VALVE IMPROPER VOLTAGE	Problem
20	REFRIGERANT LOW PRESSURE SWITCH OPEN - CIRCUIT 1	Problem
21	REFRIGERANT LOW PRESSURE SWITCH OPEN - CIRCUIT 2	Problem
22	MAIN LIMIT OPEN	Problem
29	REFRIGERANT HIGH PRESSURE SWITCH OPEN - CIRCUIT 1	Problem
30	REFRIGERANT HIGH PRESSURE SWITCH OPEN - CIRCUIT 2	Problem
33	MRLC (Rollout Limit) OPEN	Problem
34	Comfort Alert Code 4 for Compressor Circuit 2	Shutdown
35	Comfort Alert Code 5 for Compressor Circuit 2	Shutdown
36	Comfort Alert Code 6 for Compressor Circuit 2	Shutdown
37	Comfort Alert Code 7 for Compressor Circuit 2	Shutdown
38	Comfort Alert Code 8 for Compressor Circuit 2	Shutdown
39	Comfort Alert Code 9 for Compressor Circuit 2	Shutdown
42	Invalid Thermostat Selection	Warning
44	LOW-FIRE NEGATIVE PRESSURE CONTROL CLOSED	Problem
46	LOW-FIRE NEGATIVE PRESSURE CONTROL OPEN	Problem
49	FREEZE SWITCH OPEN - CIRCUIT 1	Problem
50	FREEZE SWITCH OPEN - CIRCUIT 2	Problem
55	2nd stage COMBUSTION PRESSURE SWITCH CLOSED	Problem
57	HIGH-FIRE NEGATIVE PRESSURE CONTROL CLOSED	Problem
59	Condensate Drain Plugged	Shutdown
61	HIGH-FIRE NEGATIVE PRESSURE CONTROL OPEN	Problem, Shutdown
83	Condenser Coil Temp Sensor Fail-OAT	Problem
84	Outdoor Air Temperature Sensor Fail-OAT	Problem
88	Emergency Stop Fault	Shutdown
93	CONTROL Fault	Shutdown
97	Smoke Detection	Shutdown

N.2.1. Cooling Alarm Codes and Diagnostics

All Integrated Furnace Controls (IFC) come standard with a 7-segment diagnostic display. During standby mode with no fault codes present, the display will read “0” (zero). During normal thermostat heating, cooling or continuous fan operation, a letter will be displayed to describe the mode of operation as follows:

C = Cooling

F = Continuous Fan Operation

When the control senses a fault present, it will display a code to help in diagnoses. A list of normal operating codes and potential fault codes follows:

IFC Alarm Codes - Cooling Only		
CODE	**DESCRIPTION**	**FAULT LEVEL**
0	Standby	None
c	Compressor On – Low (Flashing If In Time Delay)	None
C	Compressor On – High (Flashing If In Time Delay)	None
E	Economizer Cooling – No Compressor	None
F	Continuous Fan	None
4	Comfort Alert Code 4 For Compressor Circuit 1	Shutdown
5	Comfort Alert Code 5 For Compressor Circuit 1	Shutdown
6	Comfort Alert Code 6 For Compressor Circuit 1	Shutdown
7	Comfort Alert Code 7 For Compressor Circuit 1	Shutdown
8	Comfort Alert Code 8 For Compressor Circuit 1	Shutdown
9	Comfort Alert Code 9 For Compressor Circuit 1	Shutdown
20	Refrigerant Low Pressure Switch Open – Circuit 1	Problem
29	Refrigerant High Pressure Switch Open – Circuit 1	Problem
49	Freeze Switch Open – Circuit 1	Problem
59	Condensate Drain Plugged	Shutdown
83	Condenser Coil Temp Sensor Fail-Oct	Problem
84	Outdoor Air Temperature Sensor Fail-Oat	Problem
88	Emergency Stop Fault	Shutdown
93	Control Fault	Shutdown
97	Smoke Detection	Shutdown

The method for displaying a two-digit fault is to display the first digit for one second immediately followed by the second digit – which is also displayed for a duration of one second. A ½ second pause is then displayed. Cycle repeats until the fault is cleared. Each fault is flashed (displayed) a minimum of two times even if the fault condition has cleared before the fault can be displayed twice.

Normal Operation Mode:

0	Displayed anytime there is no fault present and no thermostat call present
c	COMPRESSOR ON - Low (Flashing if in time delay)
C	COMPRESSOR ON - High (Flashing if in time delay)
E	When the system uses Economizer Cooling with No Compressor
F	Displayed anytime thermostat calls for continuous fan

N. DIAGNOSTICS

Fault Codes with Descriptions and Solutions:

IFC Alarm Codes - Cooling Only		
CODE	**DESCRIPTION**	**FAULT LEVEL**
0	STANDBY	None
c	COMPRESSOR ON – Low (Flashing if in time delay)	None
C	COMPRESSOR ON – High (Flashing if in time delay)	None
E	Economizer Cooling – No Compressor	None
F	CONTINUOUS FAN	None
4	**Comfort Alert Code 4 for Compressor Circuit 1**	Shutdown
	ALARM Designation: Locked Rotor Circuit 1	
	DESCRIPTION:	
	1. Circuit 1 shutdown and retry after Anti-Short Cycle Delay (ASCD) Maximum is 3 attempts.	
	SOLUTION/STATUS/Possible - Troubleshooting Information	
	1. Low line voltage	
	2. Excessive Refrigerant in compressor	
	3. Seized bearings in compressor	
5	**Comfort Alert Code 5 for Compressor Circuit 1**	Shutdown
	ALARM Designation: Open Circuit 1	
	DESCRIPTION:	
	1. Circuit 1 shutdown and retry after ASCD. Note: This alarm is sent by the Comfort Alert Module only after the fault has been sensed for a minimum of 4 hours.	
	SOLUTION/STATUS/Possible - Troubleshooting Information	
	1. Condensing unit power disconnect is open	
	2. Compressor circuit breaker or fuses are open	
	3. Compressor contactor has failed open High pressure switch is open and requires manual reset	
	4. Broken supply wires or connector is notmaking contact	
	5. Unusually long compressor protector reset time due to extreme ambient temperature	
	6. Compressor windings are damaged	
6	**Comfort Alert Code 6 for Compressor Circuit 1**	Shutdown
	ALARM Designation: Missing Phase Circuit 1	
	DESCRIPTION:	
	1. Circuit 1 shutdown	
	SOLUTION/STATUS/Possible - Troubleshooting Information	
	1. Compressor fuse is open on one phase	
	2. Broken wire or connector on one phase	
	3. Compressor motor winding is damaged	
	4. Utility supply has dropped one phase	

Fault Codes with Descriptions and Solutions:

IFC Alarm Codes - Cooling Only		
CODE	**DESCRIPTION**	**FAULT LEVEL**
7	**Comfort Alert Code 7 for Compressor Circuit 1**	Shutdown
	ALARM Designation: Reverse Phase Circuit 1	
	DESCRIPTION:	
	1. Run outdoor and indoor fans continuously for circuit 1 and change mode of operation to Unoccupied Auto. This procedure prevents the Space Temperature from reaching extreme values.	
	SOLUTION/STATUS/Possible - Troubleshooting Information	
	1. Compressor running backward due to supply phase reversal	
8	**Comfort Alert Code 8 for Compressor Circuit 1**	Shutdown
	ALARM Designation: Welded Contactor Circuit 1	
	DESCRIPTION:	
	1. Circuit 1 shutdown	
	SOLUTION/STATUS/Possible - Troubleshooting Information	
	1. Compressor contactor has failed closed	
	2. Thermostat demand signal not connected to module	
9	**Comfort Alert Code 9 for Compressor Circuit 1**	Shutdown
	ALARM Designation: Low Voltage Circuit 1	
	DESCRIPTION:	
	1. Circuit 1 Shutdown and wait for voltage to return to operational levels.	
	SOLUTION/STATUS/Possible - Troubleshooting Information	
	1. Control circuit transformer is overloaded	
	2. Low line voltage to compressor	
20	**DESCRIPTION:** REFRIGERANT LOW PRESSURE SWITCH OPEN – CIRCUIT 1	Problem
	CAUSE:	
	1. Low evaporator airflow	
	2. Refrigerant undercharge	
	3. Restriction in liquid line, expansion device or filter drier	
	4. Operating below 65°F outdoors	
	5. Moisture in system	
	SOLUTION: The solution will depend on the cause.	
	1. Increase speed of blower or reduce restriction - replace air filter filter	
	2. Check for leaks - add refrigerant	
	3. Remove or replace defective component	
	4. Add Low Ambient Kit	
	5. Recover refrigerant - evacuate & recharge - add or replace filter drier	

N. DIAGNOSTICS

Fault Codes with Descriptions and Solutions:

IFC Alarm Codes - Cooling Only		
CODE	**DESCRIPTION**	**FAULT LEVEL**
29	**DESCRIPTION:** REFRIGERANT HIGH PRESSURE SWITCH OPEN – CIRCUIT 1	Problem
	CAUSE:	
	1. Restriction in liquid line, expansion device or filter drier	
	2. Refrigerant overcharge	
	3. Condenser fan not running	
	4. Air or non-condensibles in system	
	SOLUTION: The solution will depend on the cause.	
	1. Recover refrigerant - evacuate & recharge remove or replace defective component	
	2. Remove refrigerant	
	3. Check voltage, Run Capacitor & Outdoor Motor Repair or replace	
	4. Recover refrigerant, evacuate & recharge	
49	**FREEZE SWITCH OPEN – CIRCUIT 1**	Problem
	DESCRIPTION:	
	1. Occurs when sensors are either open or shorted.	
	SOLUTION: The solution will depend on the cause.	
	1. Replace the sensor	
	2. Check sensor Is installed correctly on control	
59	**Condensate Drain Plugged**	Shutdown
	DESCRIPTION:	
	1. Condensate line is blocked water inside of unit	
	SOLUTION: The solution will depend on the cause.	
	1. Remove blockage	
	2. Remove condensate pan and clean	
83	**Condenser Coil Temp Sensor Fail-OCT**	Problem
	DESCRIPTION:	
	1. No defrost operation, but unit continues to operate in either heating or cooling.	
	SOLUTION: The solution will depend on the cause.	
	1. Extreme temperatures	
	2. Replace the sensor	
	3. Check that sensor is installed correctly on control	

Fault Codes with Descriptions and Solutions:

IFC Alarm Codes - Cooling Only		
CODE	**DESCRIPTION**	**FAULT LEVEL**
84	**Outdoor Air Temperature Sensor Fail-OAT**	Problem
	DESCRIPTION:	
	1. No defrost operation, but unit continues to operate in either heating or cooling.	
	2. The heat source continues to be heat pump, independently of the outdoor air temperature	
	SOLUTION: The solution will depend on the cause.	
	1. Extreme temperatures	
	2. Replace the sensor	
	3. Check that sensor is installed correctly on control	
88	**Emergency Stop Fault**	Shutdown
	DESCRIPTION:	
	1. Complete shutdown	
	SOLUTION: The solution will depend on the cause.	
	1. Cannot be cleared by the 'Clear All Alarms" command. Must be cleared by changing the Emergency Stop Fault network value.	
93	**CONTROL Fault**	Shutdown
	DESCRIPTION:	
	1. Internal Control fault.	
	SOLUTION: The solution will depend on the cause.	
	1. Replace Control	
91	**Smoke Detection**	Shutdown
	DESCRIPTION:	
	1. RTU-C reads the smoke detection input as open -- complete shutdown.	
	SOLUTION: The solution will depend on the cause.	
	1. If not due to a fire, Replace the sensor, Check sensor is in stalled correctly on control	
	2. Check Smoke Detection Circuit, if no Smoke Detector is installed, ensure Economizer Smoke Bypass plug is installed	

N.2.2. Non-applicable Fault Codes

The controls used in this product are common with a few other product families. Because of this, there are several fault codes that are programmed into the controls but DO NOT APPLY to this product. If one of these fault codes appear, clear the fault and continue diagnostics. If the code persists, power down the unit and reapply power before continuing diagnostics.

These non-applicable fault codes are listed below:

IFC Alarm Codes - NON-APPLICABLE FAULT CODES		
CODE	Description	FAULT LEVEL
h	GAS HEAT ON - LOW-FIRE	None
H	GAS HEAT ON -HIGH-FIRE	None
11	FAILED IGNITION	Problem
12	LO FLAME SENSE	Warning
13	FLAME LOST	Problem
14	UNEXPECTED FLAME	Shutdown
15	HIGH-FIRE GAS VALVE IMPROPER VOLTAGE	Problem
21	REFRIGERANT LOW PRESSURE SWITCH OPEN - CIRCUIT 2	Problem
22	MAIN LIMIT OPEN	Problem
30	REFRIGERANT HIGH PRESSURE SWITCH OPEN - CIRCUIT 2	Problem
33	MRLC (Rollout Limit) OPEN	Problem
34	Comfort Alert Code 4 for Compressor Circuit 2	Shutdown
35	Comfort Alert Code 5 for Compressor Circuit 2	Shutdown
36	Comfort Alert Code 6 for Compressor Circuit 2	Shutdown
37	Comfort Alert Code 7 for Compressor Circuit 2	Shutdown
38	Comfort Alert Code 8 for Compressor Circuit 2	Shutdown
39	Comfort Alert Code 9 for Compressor Circuit 2	Shutdown
42	Invalid Thermostat Selection	Warning
44	LOW-FIRE NEGATIVE PRESSURE CONTROL CLOSED	Problem
46	LOW-FIRE NEGATIVE PRESSURE CONTROL OPEN	Problem
50	FREEZE SWITCH OPEN - CIRCUIT 2	Problem
55	2nd stage COMBUSTION PRESSURE SWITCH CLOSED	Problem
57	HIGH-FIRE NEGATIVE PRESSURE CONTROL CLOSED	Problem
61	HIGH-FIRE NEGATIVE PRESSURE CONTROL OPEN	Problem, Shutdown

N.3. Common Mistakes

- These are a list of common mistakes made during installation.
- Drain Pan Connections, drain trap connected to the wrong outlet side, not connected at all, or insufficient trap depth.
- Connecting a W2 call only to try and get full heat all the time, Connect both W1 and W2 together if the job requirement or thermostat is setup for single stage heating.
- Connecting a Y2 call only to try and get full cooling all the time, Connect both Y1 and Y2 together if the job requirement or thermostat is setup for single stage cooling.
- Economizer connections, not installing the 3-wire jumper plug into the economizer wiring harness, if a factory option smoke detector is not used, this will cause a Smoke Detection Fault.

Appendix A – General Product Data

GENERAL DATA - (-)ACCZR MODELS
3.0-6.0 TON [10.6 - 21.1 kW]

Model (-)ACCZR Series	036AC 036AD 036AJ	048AC 048AD 048AJ	060AC 060AD 060AJ
Cooling Performance[1]			
Gross Cooling Capacity Btu [kW]	36,000 [10.55]	49,000 [14.36]	59,500 [17.43]
EER/SEER2	11.2/14	11.2/14	11.2/14
Nominal CFM/AHRI Rated CFM [L/s]	1200/1300 [566/613]	1600/1730 [755/816]	2000/1950 [944/920]
AHRI Net Cooling Capacity Btu [kW]	35,400 [10.37]	47,500 [13.92]	57,500 [16.85]
Net Sensible Capacity Btu [kW]	27,000 [7.91]	35,100 [10.28]	41,000 [12.01]
Net Latent Capacity Btu [kW]	8,400 [2.46]	12,400 [3.63]	16,500 [4.83]
Net System Power kW	3.16	4.24	5.13
Compressor			
No./Type	1/Scroll	1/Scroll	1/Scroll
Outdoor Coil - Fin Type	Louvered	Louvered	Louvered
Tube Type	MicroChannel	MicroChannel	MicroChannel
MicroChannel Depth in. [mm]	0.71 [18]	0.71 [18]	0.71 [18]
Face Area sq. ft. [sq. m]	16.48 [1.53]	16.52 [1.53]	16.52 [1.53]
Rows / FPI [FPcm]	1 / 23 [9]	1 / 23 [9]	1 / 23 [9]
Indoor Coil - Fin Type	Louvered	Louvered	Louvered
Tube Type	MicroChannel	MicroChannel	MicroChannel
MicroChannel Depth in. [mm]	1 [25.4]	1.26 [32.0]	1.26 [32.0]
Face Area sq. ft. [sq. m]	7.52 [0.7]	7.52 [0.7]	7.52 [0.7]
Rows / FPI [FPcm]	1 / 20 [8]	1 / 20 [8]	1 / 20 [8]
Refrigerant Control	TX Valves	TX Valves	TX Valves
Drain Connection No./Size in. [mm]	1/0.75 [19.05]	1/0.75 [19.05]	1/0.75 [19.05]
Outdoor Fan - Type	Propeller	Propeller	Propeller
No. Used/Diameter in. [mm]	1/26 [660.4]	1/26 [660.4]	1/26 [660.4]
Drive Type/No. Speeds	Direct/1	Direct/1	Direct/1
CFM [L/s]	4600 [2171]	5900 [2784]	5900 [2784]
No. Motors/HP	1 at 1/5 HP	1 at 1/2 HP	1 at 1/2 HP
Motor RPM	820	1075	1075
Indoor Fan - Type	FC Centrifugal	FC Centrifugal	FC Centrifugal
No. Used/Diameter in. [mm]	1/11x11 [279x279]	1/11x11 [279x279]	1/11x11 [279x279]
Drive Type	Direct	Direct	Direct
No. Speeds	Multiple	Multiple	Multiple
No. Motors	1	1	1
Motor HP	3/4, 1 1/2, 1	3/4, 1 1/2, 1	1, 1 1/2, 1 1/5
Motor RPM	1050	1050	1050
Motor Frame Size	48	48	48
Filter - Type	Disposable	Disposable	Disposable
Furnished	Yes	Yes	Yes
(NO.) Size Recommended in. [mm x mm x mm]	(4)2x16x16 [51x406x406]	(4)2x16x16 [51x406x406]	(4)2x16x16 [51x406x406]
Refrigerant Charge Oz. [g]	68 [1928]	90 [2552]	88 [2495]
Weights			
Net Weight lbs. [kg]	521 [236]	544 [247]	547 [248]
Ship Weight lbs. [kg]	559 [254]	582 [264]	585 [265]

P. APPENDICES

Appendix A – General Product Data

GENERAL DATA - (-)ACCZT MODELS
3.0-6.0 TON [10.6 - 21.1 kW]

Model RACCZT Series	072ACT	072ACU	072ADT	072ADU
Cooling Performance[1]				
Gross Cooling Capacity Btu [kW]	70,000 [20.51]	70,000 [20.51]	70,000 [20.51]	70,000 [20.51]
EER/SEER[2]	11.2/NA	11.2/NA	11.2/NA	11.2/NA
Nominal CFM/AHRI Rated CFM [L/s]	2400/2400 [1133/1133]	2400/2400 [1133/1133]	2400/2400 [1133/1133]	2400/2400 [1133/1133]
AHRI Net Cooling Capacity Btu [kW]	68000 [19.93]	68000 [19.93]	68000 [19.93]	68000 [19.93]
Net Sensible Capacity Btu [kW]	50199.9 [14.71]	50199.9 [14.71]	50199.9 [14.71]	50199.9 [14.71]
Net Latent Capacity Btu [kW]	17800.1 [5.22]	17800.1 [5.22]	17800.1 [5.22]	17800.1 [5.22]
IEER3	14.8	14.8	14.8	14.8
Net System Power kW	6.07	6.07	6.07	6.07
Compressor				
No./Type	1/Scroll	1/Scroll	1/Scroll	1/Scroll
Outdoor Sound Rating (dB)5	**88**	**88**	**88**	**88**
Outdoor Coil - Fin Type	Louvered	Louvered	Louvered	Louvered
Tube Type	MicroChannel	MicroChannel	MicroChannel	MicroChannel
MicroChannel Depth in. [mm]	1 [25.4]	1 [25.4]	1 [25.4]	1 [25.4]
Face Area sq. ft. [sq. m]	16.52 [1.53]	16.52 [1.53]	16.52 [1.53]	16.52 [1.53]
Rows / FPI [FPcm]	1 / 23 [9]	1 / 23 [9]	1 / 23 [9]	1 / 23 [9]
Indoor Coil - Fin Type	**Louvered**	**Louvered**	**Louvered**	**Louvered**
Tube Type	MicroChannel	MicroChannel	MicroChannel	MicroChannel
MicroChannel Depth in. [mm]	1 [32]	1 [32]	1 [32]	1 [32]
Face Area sq. ft. [sq. m]	7.52 [0.7]	7.52 [0.7]	7.52 [0.7]	7.52 [0.7]
Rows / FPI [FPcm]	1 / 20 [8]	1 / 20 [8]	1 / 20 [8]	1 / 20 [8]
Refrigerant Control	TX Valves	TX Valves	TX Valves	TX Valves
Drain Connection No./Size in. [mm]	1/0.75 [19.05]	1/0.75 [19.05]	1/0.75 [19.05]	1/0.75 [19.05]
Outdoor Fan - Type	**Propeller**	**Propeller**	**Propeller**	**Propeller**
No. Used/Diameter in. [mm]	1/26 [660.4]	1/26 [660.4]	1/26 [660.4]	1/26 [660.4]
Drive Type/No. Speeds	Direct/1	Direct/1	Direct/1	Direct/1
CFM [L/s]	5900 [2784]	5900 [2784]	5900 [2784]	5900 [2784]
No. Motors/HP	1 at 3/4 HP, or 1 at 1/2 HP	1 at 3/4 HP, or 1 at 1/2 HP	1 at 3/4 HP, or 1 at 1/2 HP	1 at 3/4 HP, or 1 at 1/2 HP
Motor RPM	1100	1100	1100	1100
Indoor Fan - Type	**FC Centrifugal**	**FC Centrifugal**	**FC Centrifugal**	**FC Centrifugal**
No. Used/Diameter in. [mm]	1/11x11 [279x279]	1/11x11 [279x279]	1/11x11 [279x279]	1/11x11 [279x279]
Drive Type	Direct	Direct	Direct	Direct
No. Speeds	Multiple	Multiple	Multiple	Multiple
No. Motors	1	1	1	1
Motor HP	1 1/5	1 1/5	1 1/5	1 1/5
Motor RPM	1300	1300	1300	1300
Motor Frame Size	48	48	48	48
Filter - Type	**Disposable**	**Disposable**	**Disposable**	**Disposable**
Furnished	Yes	Yes	Yes	Yes
(NO.) Size Recommended in. [mm x mm x mm]	(4)2x16x16 [51x406x406]	(4)2x16x16 [51x406x406]	(4)2x16x16 [51x406x406]	(4)2x16x16 [51x406x406]
Refrigerant Charge Oz. [g]	**105.6[2994]**	**105.6[2994]**	**105.6[2994]**	**105.6[2994]**
Weights				
Net Weight lbs. [kg]	582 [264]	582 [264]	582 [264]	582 [264]
Ship Weight lbs. [kg]	620 [281]	620 [281]	620 [281]	620 [281]

Appendix B – Electrical Data

See Appendix E for Electrical Data and Fuse Sizing specific to the Manufacturer's approved Electric Heater Kits.

ELECTRICAL DATA - (-)ACCZR SERIES							
		036ACT	036ACU	036ADT	036ADU	036AJT	036AJU
Unit Information	Unit Operating Voltage Range	187-253	187-253	418-506	418-506	187-253	187-253
	Volts	208/230	208/230	460	460	208/230	208/230
	Phase	3	3	3	3	1	1
	Hz	60	60	60	60	60	60
	Minimum Circuit Ampacity	19	25	11	10	25	31
	Minimum Overcurrent Protection Device Size	25	25	15	15	30	35
	Maximum Overcurrent Protection Device Size	25	35	15	15	35	40
Compressor Motor	No.	1	1	1	1	1	1
	Volts	208/230	208/230	480	480	208/230	208/230
	Phase	3	3	3	3	1	1
	RPM	3450	3450	3450	3450	3450	3450
	HP, Compressor 1	2 1/2	2 1/2	2 1/2	2 1/2	2 1/2	2 1/2
	Amps (RLA), Comp. 1	10	10	6.3	6.3	15.7	15.7
	Amps (LRA), Comp. 1	71	71	38	38	77	77
	HP, Compressor 2						
	Amps (RLA), Comp. 2						
	Amps (LRA), Comp. 2						
Condenser Motor	No.	1	1	1	1	1	1
	Volts	208/230	208/230	480	480	208/230	208/230
	Phase	1	1	1	1	1	1
	HP	1/5	1/5	1/5	1/5	1/5	1/5
	Amps (FLA, each)	1.2	1.2	0.8	0.8	1.2	1.2
	Amps (LRA, each)	2.3	2.3	1.4	1.4	2.3	2.3
Evaporator Fan	No.	1	1	1	1	1	1
	Volts	208/230	208/230	460	460	208/230	208/230
	Phase	1	1	1	1	1	1
	HP	3/4	1 1/2	3/4	1	3/4	1 1/2
	Amps (FLA, each)	6	11.5	3.2	2.1	6	11.5
	Amps (LRA, each)						

Appendix B – Electrical Data (Cont.)

See Appendix E for Electrical Data and Fuse Sizing specific to the Manufacturer's approved Electric Heater Kits.

ELECTRICAL DATA - (-)ACCZR SERIES							
		048ACT	048ACU	048ADT	048ADU	048AJT	048AJU
Unit Information	Unit Operating Voltage Range	187-253	187-253	418-506	418-506	187-253	187-253
	Volts	208/230	208/230	460	460	208/230	208/230
	Phase	3	3	3	3	1	1
	Hz	60	60	60	60	60	60
	Minimum Circuit Ampacity	25	31	13	12	34	40
	Minimum Overcurrent Protection Device Size	30	35	15	15	40	45
	Maximum Overcurrent Protection Device Size	35	40	15	15	50	50
Compressor Motor	No.	1	1	1	1	1	1
	Volts	208/230	208/230	460	460	208/230	208/230
	Phase	3	3	3	3	1	1
	RPM	3450	3450	3450	3450	3450	3450
	HP, Compressor 1	3 1/2	3 1/2	3 1/2	3 1/2	3 1/2	3 1/2
	Amps (RLA), Comp. 1	14.6	14.6	6.8	6.8	22.1	22.1
	Amps (LRA), Comp. 1	83.1	83.1	41	41	109	109
	HP, Compressor 2						
	Amps (RLA), Comp. 2						
	Amps (LRA), Comp. 2						
Condenser Motor	No.	1	1	1	1	1	1
	Volts	208/230	208/230	460	460	208/230	208/230
	Phase	1	1	1	1	1	1
	HP	1/2	1/2	1/2	1/2	1/2	1/2
	Amps (FLA, each)	2.5	2.5	1.5	1.5	2.5	2.5
	Amps (LRA, each)	5.6	5.6	3.1	3.1	5.6	5.6
Evaporator Fan	No.	1	1	1	1	1	1
	Volts	208/230	208/230	460	460	208/230	208/230
	Phase	1	1	1	1	1	1
	HP	3/4	1 1/2	3/4	1	3/4	1 1/2
	Amps (FLA, each)	6	11.5	3.2	2.1	6	11.5
	Amps (LRA, each)						

Appendix B – Electrical Data (Cont.)

See Appendix E for Electrical Data and Fuse Sizing specific to the Manufacturer's approved Electric Heater Kits.

ELECTRICAL DATA - (-)ACCZR SERIES							
		060ACT	060ACU	060ADT	060ADU	060AJT	060AJU
Unit Information	Unit Operating Voltage Range	187-253	187-253	418-506	418-506	187-253	187-253
	Volts	208/230	208/230	460	460	208/230	208/230
	Phase	3	3	3	3	1	1
	Hz	60	60	60	60	60	60
	Minimum Circuit Ampacity	30	34	15	15	42	46
	Minimum Overcurrent Protection Device Size	35	40	20	20	50	50
	Maximum Overcurrent Protection Device Size	45	45	20	20	60	70
Compressor Motor	No.	1	1	1	1	1	1
	Volts	208/230	208/230	460	460	208/230	208/230
	Phase	3	3	3	3	1	1
	RPM	3450	3450	3450	3450	3450	3450
	HP, Compressor 1	4	4	4	4	4	4
	Amps (RLA), Comp. 1	17.7	17.7	7.9	7.9	25	25
	Amps (LRA), Comp. 1	110	110	52	52	134	134
	HP, Compressor 2						
	Amps (RLA), Comp. 2						
	Amps (LRA), Comp. 2						
Condenser Motor	No.	1	1	1	1	1	1
	Volts	208/230	208/230	460	460	208/230	208/230
	Phase	1	1	1	1	1	1
	HP	1/2	1/2	1/2	1/2	1/2	1/2
	Amps (FLA, each)	2.5	2.5	1.5	1.5	2.5	2.5
	Amps (LRA, each)	5.6	5.6	3.1	3.1	5.6	5.6
Evaporator Fan	No.	1	1	1	1	1	1
	Volts	208/230	208/230	460	460	208/230	208/230
	Phase	1	1	1	1	1	1
	HP	1	1 1/2	1	1 1/2	1	1 1/2
	Amps (FLA, each)	76	11.5	4	3.7	11.5	11.5
	Amps (LRA, each)						

Appendix B – Electrical Data (Cont.)

See Appendix E for Electrical Data and Fuse Sizing specific to the Manufacturer's approved Electric Heater Kits.

ELECTRICAL DATA - (-)ACCZT SERIES					
		072ACT	072ACU	072ADT	072ADU
Unit Information	Unit Operating Voltage Range	187-253	187-253	418-506	418-506
	Volts	208/230	208/230	460	460
	Phase	3	3	3	3
	Hz	60	60	60	60
	Minimum Circuit Ampacity	33	33	17	17
	Minimum Overcurrent Protection Device Size	40	40	20	20
	Maximum Overcurrent Protection Device Size	50	50	25	25
Compressor Motor	No.	1	1	1	1
	Volts	208/230	208/230	460	460
	Phase	3	3	3	3
	RPM	3450	3450	3450	3450
	HP, Compressor 1	5	5	5	5
	Amps (RLA), Comp. 1	17.6	17.6	8.5	8.5
	Amps (LRA), Comp. 1	136	136	66.1	66.1
	HP, Compressor 2				
	Amps (RLA), Comp. 2				
	Amps (LRA), Comp. 2				
Condenser Motor	No.	1	1	1	1
	Volts	208/230	208/230	460	460
	Phase	1	1	1	1
	HP	3/4	3/4	3/4	3/4
	Amps (FLA, each)	4.2	4.2	2.3	2.3
	Amps (LRA, each)	10.1	10.1	4.9	4.9
Evaporator Fan	No.	1	1	1	1
	Volts	208/230	208/230	460	460
	Phase	1	1	1	1
	HP	1 1/5	1 1/5	1 1/5	1 1/5
	Amps (FLA, each)	6.6	6.6	3.7	3.7
	Amps (LRA, each)				

Appendix B – Electrical Data (Cont.)

See Appendix E for Electrical Data and Fuse Sizing specific to the Manufacturer's approved Electric Heater Kits.

ELECTRICAL DATA - (-)ACCZT SERIES WITH HUMIDIDRY					
		072ACT	072ACU	072ADT	072ADU
Unit Information	Unit Operating Voltage Range	187-253	187-253	418-506	418-506
	Volts	208/230	208/230	460	460
	Phase	3	3	3	3
	Hz	60	60	60	60
	Minimum Circuit Ampacity	34	34	17	17
	Minimum Overcurrent Protection Device Size	40	40	20	20
	Maximum Overcurrent Protection Device Size	50	50	25	25
Compressor Motor	No.	1	1	1	1
	Volts	208/230	208/230	460	460
	Phase	3	3	3	3
	RPM	3450	3450	3450	3450
	HP, Compressor 1	5	5	5	5
	Amps (RLA), Comp. 1	17.6	17.6	8.5	8.5
	Amps (LRA), Comp. 1	136	136	66.1	66.1
	HP, Compressor 2				
	Amps (RLA), Comp. 2				
	Amps (LRA), Comp. 2				
Condenser Motor	No.	1	1	1	1
	Volts	208/230	208/230	460	460
	Phase	1	1	1	1
	HP	1/2	1/2	1/2	1/2
	Amps (FLA, each)	5.3	5.3	2.5	2.5
	Amps (LRA, each)				
Evaporator Fan	No.	1	1	1	1
	Volts	208/230	208/230	460	460
	Phase	1	1	1	1
	HP	1 1/5	1 1/5	1 1/5	1 1/5
	Amps (FLA, each)	6.6	6.6	3.7	3.7
	Amps (LRA, each)				

P. APPENDICES

Appendix C – Air Flow Performance Data

3-5T - Low Static - Sideflow (208-230V)												
Unit Model (Tonnage)	Manufacturer Recommended Airflow Range (Min/Max) CFM	Motor HP [W]	Motor Speed	CFM/ WATTS	External Static Pressure - Inches W.C. [kPa]							
					0.1 [.02]	0.2 [.05]	0.3 [.07]	0.4 [.10]	0.5 [.12]	0.6 [.15]	0.7 [.17]	0.8 [.20]
(-)ACCZR036 (3T)	1050/1350	3/4 HP [559]	Fan - Tap 1	CFM	895	809	730	642	555	497	420	367
				WATTS	52	59	66	73	79	80	85	86
		3/4 HP [559]	Tap 2	CFM	1189	1111	1041	964	889	832	763	711
				WATTS	145	153	162	171	179	184	192	197
		3/4 HP [559]	Tap 3	CFM	1370	1297	1232	1163	1095	1038	974	922
				WATTS	201	211	221	231	240	248	257	264
		3/4 HP [559]	Cooling - Tap 4 *	CFM	1170	1091	1020	943	867	810	740	688
				WATTS	138	147	156	164	172	177	185	189
		3/4 HP [559]	High Speed - Tap 5	CFM	1513	1445	1389	1322	1269	1210	1153	1097
				WATTS	232	242	252	264	275	285	295	302
(-)ACCZR048 (4T)	1400/1800	3/4 HP [559]	Fan - Tap 1	CFM	895	809	730	642	555	497	420	367
				WATTS	52	59	66	73	79	80	85	86
		3/4 HP [559]	Tap 2	CFM	1288	1212	1144	1072	1001	944	878	825
				WATTS	175	185	194	203	212	219	227	233
		3/4 HP [559]	Tap 3	CFM	1567	1499	1439	1378	1318	1261	1203	1151
				WATTS	263	274	285	296	306	317	328	338
		3/4 HP [559]	Cooling - Tap 4 *	CFM	1507	1438	1376	1313	1250	1193	1133	1081
				WATTS	244	255	265	276	286	296	307	316
		3/4 HP [559]	High Speed - Tap 5	CFM	1876	1817	1766	1718	1671	1614	1564	1512
				WATTS	360	373	386	399	411	427	440	454
(-)ACCZR060 (5T)	1750/2250	1 HP [745]	Fan - Tap 1	CFM	1169	1092	1022	950	874	783	715	640
				WATTS	129	138	147	158	165	173	180	187
		1 HP [745]	Tap 2	CFM	1586	1519	1459	1399	1339	1279	1221	1161
				WATTS	283	294	305	316	329	340	351	361
		1 HP [745]	Tap 3	CFM	1852	1794	1738	1684	1628	1575	1523	1471
				WATTS	437	450	463	476	491	503	516	529
		1 HP [745]	Cooling - Tap 4 *	CFM	1954	1899	1845	1792	1739	1688	1639	1590
				WATTS	496	510	524	537	553	566	580	594
		1 HP [745]	High Speed - Tap 5	CFM	2298	2254	2199	2154	2106	2059	2014	1976
				WATTS	929	956	981	1001	1030	1056	1081	1105

NOTES: For 575V units, add 30W (transformer wattage) to the watt values mentioned in the table.
Pressure drops across the 3-5T CFM range (1050 - 2250)
Wet coil: ~0.09 Inches W.C.*
Downflow: ~0.1 Inches W.C.*
HumidiDry / Reheat Coil: ~0.09 Inches W.C.*

Appendix C – Air Flow Performance Data (Cont.)

3-5T - High Static - Sideflow (208-230V)												
Unit Model (Tonnage)	Manufacturer Recommended Airflow Range (Min/Max) CFM	Motor HP [W]	Motor Speed	CFM/ WATTS	External Static Pressure - Inches W.C. [kPa]							
					0.8 [.2]	0.9 [.22]	1 [.25]	1.1 [.27]	1.2 [.3]	1.3 [.32]	1.4 [.35]	1.5 [.37]
(-)ACCZR036 (3T)	1050/1350	1.5 HP [1118.5]	Fan - Tap 1	CFM	1037	974	913	851	795	786	729	676
				WATTS	261	270	279	287	294	298	306	312
		1.5 HP [1118.5]	Tap 2	CFM	1393	1338	1286	1232	1183	1158	1107	1058
				WATTS	474	485	497	509	520	529	540	549
		1.5 HP [1118.5]	Tap 3	CFM	1588	1538	1491	1442	1397	1363	1314	1268
				WATTS	591	603	617	630	644	655	668	680
		1.5 HP [1118.5]	Cooling - Tap 4 *	CFM	1037	974	913	851	795	786	729	676
				WATTS	261	270	279	287	294	298	306	312
		1.5 HP [1118.5]	High Speed - Tap 5	CFM	1495	1443	1398	1352	1303	1252	1202	1147
				WATTS	493	508	519	531	542	555	563	575
(-)ACCZR048 (4T)	1400/1800	1.5 HP [1118.5]	Fan - Tap 1	CFM	1371	1316	1264	1209	1160	1109	1057	1008
				WATTS	461	472	484	495	506	517	527	537
		1.5 HP [1118.5]	Tap 2	CFM	1675	1627	1582	1535	1492	1444	1397	1352
				WATTS	643	656	671	684	699	712	725	738
		1.5 HP [1118.5]	Tap 3	CFM	1740	1693	1650	1605	1563	1516	1470	1426
				WATTS	681	695	711	725	740	754	768	781
		1.5 HP [1118.5]	Cooling - Tap 4 *	CFM	1360	1305	1252	1198	1148	1097	1045	996
				WATTS	454	466	477	488	499	510	520	530
		1.5 HP [1118.5]	High Speed - Tap 5	CFM	1800	1762	1721	1676	1641	1587	1546	1512
				WATTS	692	706	719	737	755	768	780	795
(-)ACCZR060 (5T)	1750/2250	1.5 HP [1118.5]	Fan - Tap 1	CFM	1527	1476	1427	1377	1330	1281	1232	1185
				WATTS	554	567	580	592	605	617	629	640
		1.5 HP [1118.5]	Tap 2	CFM	1523	1471	1423	1372	1326	1277	1227	1180
				WATTS	552	564	577	590	602	614	626	637
		1.5 HP [1118.5]	Tap 3	CFM	1935	1893	1855	1814	1776	1732	1689	1647
				WATTS	798	813	831	846	864	880	895	910
		1.5 HP [1118.5]	Cooling - Tap 4 *	CFM	1581	1531	1484	1435	1390	1341	1293	1247
				WATTS	587	599	613	626	640	652	664	676
		1.5 HP [1118.5]	High Speed - Tap 5	CFM	2151	2115	2082	2046	2013	1972	1932	1893
				WATTS	928	945	964	981	1001	1020	1037	1054

NOTES: For 575V units, add 30W (transformer wattage) to the watt values mentioned in the table.
Pressure drops across the 3-5T CFM range (1050 - 2250)
Wet coil: ~0.09 Inches W.C.*
Downflow: ~0.1 Inches W.C.*
HumidiDry / Reheat Coil: ~0.09 Inches W.C.*

P. APPENDICES

Appendix C – Air Flow Performance Data (Cont.)

3-5T - Low Static - Sideflow (460V)												
Unit Model (Tonnage)	Manufacturer Recommended Airflow Range (Min/Max) CFM	Motor HP [W]	Motor Speed	CFM/ WATTS	External Static Pressure - Inches W.C. [kPa]							
					0.1 [.02]	0.2 [.05]	0.3 [.07]	0.4 [.10]	0.5 [.12]	0.6 [.15]	0.7 [.17]	0.8 [.20]
(-)ACCZR036 (3T)	1050/1350	3/4 HP [559]	Fan - Tap 1	CFM	1110	956	870	792	709	630	549	512
				WATTS	79	78	84	91	98	104	110	111
		3/4 HP [559]	Low Heat -Tap 2	CFM	1255	1120	1040	965	887	813	738	697
				WATTS	145	147	155	163	172	179	186	190
		3/4 HP [559]	High Heat -Tap 3	CFM	1621	1534	1467	1401	1337	1273	1212	1163
				WATTS	311	321	334	346	357	368	379	388
		3/4 HP [559]	Cooling - Tap 4	CFM	1392	1276	1200	1128	1056	986	916	872
				WATTS	207	212	222	232	241	250	259	264
		3/4 HP [559]	High Speed - Tap 5	CFM	1745	1673	1618	1549	1497	1435	1388	1334
				WATTS	341	357	370	384	396	407	418	430
(-)ACCZR048 (4T)	1400/1800	3/4 HP [559]	Fan - Tap 1	CFM	1110	956	870	792	709	630	549	512
				WATTS	79	78	84	91	98	104	110	111
		3/4 HP [559]	Low Heat -Tap 2	CFM	1345	1222	1145	1072	998	926	854	812
				WATTS	186	190	199	208	217	225	234	239
		3/4 HP [559]	High Heat -Tap 3	CFM	1755	1686	1624	1561	1503	1443	1387	1334
				WATTS	372	386	399	413	425	437	449	461
		3/4 HP [559]	Cooling - Tap 4	CFM	1738	1667	1604	1541	1482	1422	1365	1313
				WATTS	365	378	391	404	417	429	441	452
		3/4 HP [559]	High Speed - Tap 5	CFM	2081	2034	1981	1922	1873	1816	1769	1722
				WATTS	560	576	592	609	625	641	657	672
(-)ACCZR060 (5T)	1750/2250	1 HP [745]	Fan - Tap 1	CFM	1235	1155	1077	1013	955	882	778	691
				WATTS	150	159	169	177	185	193	204	211
		1 HP [745]	Low Heat -Tap 2	CFM	1453	1382	1311	1246	1188	1131	1064	1002
				WATTS	186	198	209	219	228	236	246	255
		1 HP [745]	High Heat -Tap 3	CFM	1975	1921	1863	1808	1756	1707	1654	1602
				WATTS	541	557	573	590	605	618	632	644
		1 HP [745]	Cooling - Tap 4	CFM	2049	1996	1941	1887	1836	1788	1737	1687
				WATTS	591	608	625	642	657	672	686	699
		1 HP [745]	High Speed - Tap 5	CFM	2408	2367	2318	2267	2226	2177	2139	2089
				WATTS	861	884	900	921	939	957	974	996

NOTES: For 575V units, add 30W (transformer wattage) to the watt values mentioned in the table.
Pressure drops across the 3-5T CFM range (1050 - 2250)
Wet coil: ~0.09 Inches W.C.*
Downflow: ~0.1 Inches W.C.*
HumidiDry / Reheat Coil: ~0.09 Inches W.C.*

Appendix C – Air Flow Performance Data (Cont.)

3-5T - High Static - Sideflow (460V)												
Unit Model (Tonnage)	Manufacturer Recommended Airflow Range (Min/Max) CFM	Motor HP [W]	Motor Speed	CFM/ WATTS	External Static Pressure - Inches W.C. [kPa]							
					0.8 [.2]	0.9 [.22]	1 [.25]	1.1 [.27]	1.2 [.3]	1.3 [.32]	1.4 [.35]	1.5 [.37]
(-)ACCZR036 (3T)	1050/1350	1 HP [745]	Fan - Tap 1	CFM	958	895	828	768	722	669	684	653
				WATTS	226	235	247	259	280	304	337	371
		1 HP [745]	Low Heat -Tap 2	CFM	958	895	828	768	722	669	684	653
				WATTS	226	235	247	259	280	304	337	371
		1 HP [745]	High Heat -Tap 3	CFM	1591	1540	1486	1434	1375	1311	1263	1179
				WATTS	637	649	659	668	670	667	664	649
		1 HP [745]	Cooling - Tap 4	CFM	1064	1002	938	879	831	776	780	741
				WATTS	295	304	315	327	345	365	391	417
		1 HP [745]	High Speed - Tap 5	CFM	1526	1481	1440	1392	1336	1285	1231	1175
				WATTS	531	540	552	563	578	588	598	610
(-)ACCZR048 (4T)	1400/1800	1 HP [745]	Fan - Tap 1	CFM	1061	1000	935	877	828	774	778	739
				WATTS	293	302	314	325	344	363	390	416
		1 HP [745]	Low Heat -Tap 2	CFM	1438	1384	1327	1272	1217	1156	1123	1052
				WATTS	537	549	559	569	576	579	585	581
		1 HP [745]	High Heat -Tap 3	CFM	1629	1579	1526	1474	1415	1350	1298	1211
				WATTS	662	674	684	693	694	689	684	666
		1 HP [745]	Cooling - Tap 4	CFM	1434	1380	1323	1269	1213	1152	1120	1049
				WATTS	535	546	557	567	574	577	583	580
		1 HP [745]	High Speed - Tap 5	CFM	1795	1751	1710	1668	1629	1581	1538	1490
				WATTS	721	734	745	758	770	784	795	811
(-)ACCZR060 (5T)	1750/2250	1 1/5 HP [895]	Fan - Tap 1	CFM	1063	1000	909	849	796	743	695	644
				WATTS	311	319	331	341	355	365	375	384
		1 1/5 HP [895]	Low Heat -Tap 2	CFM	1063	1000	909	849	796	743	695	644
				WATTS	311	319	331	341	355	365	375	384
		1 1/5 HP [895]	High Heat -Tap 3	CFM	1444	1390	1335	1279	1220	1161	1090	1035
				WATTS	468	487	488	499	505	514	513	521
		1 1/5 HP [895]	Cooling - Tap 4	CFM	1826	1795	1754	1714	1674	1636	1590	1540
				WATTS	681	700	720	738	757	774	787	799
		1 1/5 HP [895]	High Speed - Tap 5	CFM	2127	2076	2045	2000	1966	1930	1894	1871
				WATTS	906	924	941	958	977	1008	1021	1049

NOTES: For 575V units, add 30W (transformer wattage) to the watt values mentioned in the table.
Pressure drops across the 3-5T CFM range (1050 - 2250)
Wet coil: ~0.09 Inches W.C.*
Downflow: ~0.1 Inches W.C.*
HumidiDry / Reheat Coil: ~0.09 Inches W.C.*

P. APPENDICES

Appendix C – Air Flow Performance Data (Cont.)

6T - Low Static -Sideflow (230V)												
Unit Model (Tonnage)	Manufacturer Recommended Airflow Range (Min/Max) CFM	Motor HP [W]	Motor Speed	CFM/ WATTS	External Static Pressure - Inches W.C. [kPa]							
					0.1 [.02]	0.2 [.05]	0.3 [.07]	0.4 [.10]	0.5 [.12]	0.6 [.15]	0.7 [.17]	0.8 [.20]
(-)ACCZT072 (6T)		1.2 HP [895]	Fan/Low heat - Tap 1	CFM	1384	1319	1249	1188	1127	1066	1006	947
				WATTS	192	204	215	225	240	245	255	265
		1.2 HP [895]	High Heat -Tap 2	CFM	1802	1753	1698	1648	1597	1548	1500	1457
				WATTS	374	389	402	423	439	449	467	481
		1.2 HP [895]	Low Cool -Tap 3	CFM	1624	1548	1465	1394	1322	1251	1181	900
				WATTS	225	239	252	264	282	288	299	248
		1.2 HP [895]	High Cool - Tap 4	CFM	2331	2290	2245	2204	2159	2118	2072	2036
				WATTS	700	718	730	745	760	782	797	820
		1.2 HP [895]	High Speed - Tap 5	CFM	2488	2441	2396	2358	2325	2276	2227	2194
				WATTS	836	859	875	890	906	920	935	960

6T - High Static - Sideflow (230V)												
Unit Model (Tonnage)	Manufacturer Recommended Airflow Range (Min/Max) CFM	Motor HP [W]	Motor Speed	CFM/ WATTS	External Static Pressure - Inches W.C. [kPa]							
					0.8 [.2]	0.9 [.22]	1 [.25]	1.1 [.27]	1.2 [.3]	1.3 [.32]	1.4 [.35]	1.5 [.37]
(-)ACCZT072 (6T)		1.2 HP [895]	Fan/Low heat - Tap 1	CFM	1200	1071	981	903	823	755	679	610
				WATTS	336	343	354	359	368	374	383	395
		1.2 HP [895]	High Heat -Tap 2	CFM	1950	1902	1860	1818	1776	1729	1686	1646
				WATTS	771	786	799	814	830	841	857	873
		1.2 HP [895]	Low Cool -Tap 3	CFM	1111	992	908	836	762	699	629	424
				WATTS	311	318	327	332	340	346	354	291
		1.2 HP [895]	High Cool - Tap 4	CFM	2331	2290	2245	2204	2159	2118	2072	2036
				WATTS	700	718	730	745	760	782	797	820
		1.2 HP [895]	High Speed - Tap 5	CFM	2462	2416	2371	2337	2294	2251	2214	2165
				WATTS	1053	1063	1078	1085	1100	1113	1121	1135

NOTES: For 575V units, add 30W (transformer wattage) to the watt values mentioned in the table.
Pressure drops across the 3-5T CFM range (1050 - 2250)
Wet coil: ~0.09 Inches W.C.*
Downflow: ~0.1 Inches W.C.*
HumidiDry / Reheat Coil: ~0.09 Inches W.C.*

Appendix C – Air Flow Performance Data (Cont.)

6T - Low Static - Sideflow (460V)												
Unit Model (Tonnage)	Manufacturer Recommended Airflow Range (Min/Max) CFM	Motor HP [W]	Motor Speed	CFM/ WATTS	External Static Pressure - Inches W.C. [kPa]							
					0.1 [.02]	0.2 [.05]	0.3 [.07]	0.4 [.10]	0.5 [.12]	0.6 [.15]	0.7 [.17]	0.8 [.20]
(-)ACCZT072 (6T)		1.2 HP [895]	Fan/Low heat - Tap 1	CFM	1384	1319	1249	1188	1127	1066	1006	947
				WATTS	192	204	215	225	240	245	255	265
		1.2 HP [895]	High Heat -Tap 2	CFM	1787	1738	1684	1634	1583	1534	1486	1444
				WATTS	365	381	395	415	432	442	460	474
		1.2 HP [895]	Low Cool -Tap 3	CFM	1624	1548	1465	1394	1322	1251	1181	900
				WATTS	225	239	252	264	282	288	299	248
		1.2 HP [895]	High Cool - Tap 4	CFM	2331	2290	2245	2204	2159	2118	2072	2036
				WATTS	700	718	730	745	760	782	797	820
		1.2 HP [895]	High Speed - Tap 5	CFM	2488	2441	2396	2358	2325	2276	2227	2194
				WATTS	836	859	875	890	906	920	935	960

6T - High Static -Sideflow (460V)												
Unit Model (Tonnage)	Manufacturer Recommended Airflow Range (Min/Max) CFM	Motor HP [W]	Motor Speed	CFM/ WATTS	External Static Pressure - Inches W.C. [kPa]							
					0.8 [.2]	0.9 [.22]	1 [.25]	1.1 [.27]	1.2 [.3]	1.3 [.32]	1.4 [.35]	1.5 [.37]
(-)ACCZT072 (6T)		1.2 HP [895]	Fan/Low heat - Tap 1	CFM	1200	1071	981	903	823	755	679	610
				WATTS	336	343	354	359	368	374	383	395
		1.2 HP [895]	High Heat -Tap 2	CFM	1950	1902	1860	1818	1776	1729	1686	1646
				WATTS	771	786	799	814	830	841	857	873
		1.2 HP [895]	Low Cool -Tap 3	CFM	1111	992	908	836	762	699	629	424
				WATTS	311	318	327	332	340	346	354	291
		1.2 HP [895]	High Cool - Tap 4	CFM	2331	2290	2245	2204	2159	2118	2072	2036
				WATTS	700	718	730	745	760	782	797	820
		1.2 HP [895]	High Speed - Tap 5	CFM	2462	2416	2371	2337	2294	2251	2214	2165
				WATTS	1053	1063	1078	1085	1100	1113	1121	1135

NOTES: For 575V units, add 30W (transformer wattage) to the watt values mentioned in the table.
Pressure drops across the 3-5T CFM range (1050 - 2250)
Wet coil: ~0.09 Inches W.C.*
Downflow: ~0.1 Inches W.C.*
HumidiDry / Reheat Coil: ~0.09 Inches W.C.*

Appendix C – Air Flow Performance Data (Cont.)

FLUSH MOUNT CONCENTRIC DIFFUSER PERFORMANCE INFORMATION								
Diffuser Model Number	CFM	Minimum Throw (feet)	Maximum Throw (feet)	Static Pressure Drop (Diffuser)	Static Pressure Drop (Adapter)	Sound (in Db)	Diffuser Face Return Area (sq. ft.)	Diffuser Face Supply Area (sq. ft.)
					CN-1805-142			
1017-0200A-00010	1000	9	12	0.14	0.057	20	2.1	3.37
	1200	12	16	0.2	0.08	25	2.1	3.37
	1400	15	20	0.26	0.105	30	2.1	3.37
	1600	17	23	0.33	0.134	30	2.1	3.37
	1800	20	26	0.41	0.17	35	2.1	3.37
	2000	22	29	0.5	0.21	40	2.1	3.37
	2400	25	32	0.68	0.29	45	2.1	3.37

DROP CONCENTRIC DIFFUSER PERFORMANCE INFORMATION								
Diffuser Model Number	CFM	Minimum Throw (feet)	Maximum Throw (feet)	Static Pressure Drop (Diffuser)	Static Pressure Drop (Adapter)	Sound (in Db)	Diffuser Face Return Area (sq. ft.)	Diffuser Face Supply Area (sq. ft.)
					CN-1805-142			
1018-0200A-00010	1000	9	23	0.07	0.057	12	4.06	2.82
	1200	10	24	0.11	0.08	15	4.06	2.82
	1400	12	26	0.15	0.105	19	4.06	2.82
	1600	13	28	0.19	0.134	21	4.06	2.82
	1800	15	30	0.24	0.17	26	4.06	2.82
	2000	17	32	0.3	0.21	30	4.06	2.82
	2400	19	34	0.43	0.29	32	4.06	2.82

FLUSH MOUNT CONCENTRIC DIFFUSER PERFORMANCE INFORMATION								
Diffuser Model Number For	CFM	Minimum Throw (feet)	Maximum Throw (feet)	Static Pressure Drop (Diffuser)	Static Pressure Drop (Adapter)	Sound (in Db)	Diffuser Face Return Area (sq. ft.)	Diffuser Face Supply Area (sq. ft.)
					CN-1805-141			
1017-300A-00010	2600	17	24	0.49	0.21	30	3.48	3.76
	2800	18	28	0.55	0.24	35	3.48	3.76
	3000	20	30	0.62	0.27	35	3.48	3.76
	3200	22	33	0.69	0.31	40	3.48	3.76
	3400	23	37	0.77	0.34	40	3.48	3.76

DROP CONCENTRIC DIFFUSER PERFORMANCE INFORMATION								
Diffuser Model Number	CFM	Minimum Throw (feet)	Maximum Throw (feet)	Static Pressure Drop (Diffuser)	Static Pressure Drop (Adapter)	Sound (in Db)	Diffuser Face Return Area (sq. ft.)	Diffuser Face Supply Area (sq. ft.)
					CN-1805-141			
1018-300A-00010	2600	22	39	0.34	0.21	32	5.69	3.1
	2800	23	40	0.39	0.24	38	5.69	3.1
	3000	25	42	0.45	0.27	40	5.69	3.1
	3200	26	43	0.53	0.31	41	5.69	3.1
	3400	27	45	0.61	0.34	42	5.69	3.1

Appendix C – Air Flow Performance Data (Cont.)

Airflow (cfm)	Downflow dP (inH20)	Horizontal dP (inH20)
1050	0.06	0.01
1150	0.07	0.01
1250	0.09	0.01
1350	0.10	0.01
1450	0.12	0.01
1550	0.13	0.02
1650	0.15	0.02
1750	0.17	0.02
1850	0.19	0.02
1950	0.21	0.02
2050	0.23	0.03
2150	0.26	0.03
2250	0.28	0.03
2350	0.31	0.04

P. APPENDICES

Appendix D – Cooling Data for 3Ton

COOLING PERFORMANCE DATA -(-)ACCZR036A																	
Entering Indoor Air @ 80ºF [26.7ºC] dbE																	
wbE			71ºF [21.7ºC]			67ºF [19.4ºC]			63ºF [17.2ºC]			61ºF [16.1ºC]			59ºF [15.0ºC]		
CFM [L/s]			1350 [637]	1300 [614]	1050 [496]	1350 [637]	1300 [614]	1050 [496]	1350 [637]	1300 [614]	1050 [496]	1350 [637]	1300 [614]	1050 [496]	1350 [637]	1300 [614]	1050 [496]
DR			0.21	0.2	0.15	0.21	0.2	0.15	0.21	0.2	0.15	0.21	0.2	0.15	0.21	0.2	0.15
Outdoor Dry Bulb Temperature	75ºF [23.9ºC]	Total BTUH [kW]	43.5 [12.8]	43.2 [12.7]	41.7 [12.2]	40.4 [11.9]	40.2 [11.8]	38.8 [11.4]	38.4 [11.2]	38.1 [11.2]	36.8 [10.8]	37.8 [11.1]	37.6 [11]	36.3 [10.6]	37.7 [11.1]	37.5 [11]	36.2 [10.6]
		Sens BTUH [kW]	25.7 [7.5]	25.3 [7.4]	23 [6.7]	29.9 [8.8]	29.4 [8.6]	26.8 [7.8]	33.4 [9.8]	32.9 [9.6]	29.9 [8.8]	35.1 [10.3]	34.5 [10.1]	31.4 [9.2]	36.8 [10.8]	36.1 [10.6]	32.9 [9.6]
		Power	2.4	2.4	2.3	2.4	2.4	2.3	2.4	2.4	2.3	2.4	2.4	2.3	2.4	2.4	2.3
	80ºF [26.7ºC]	Total BTUH [kW]	42.2 [12.4]	41.9 [12.3]	40.4 [11.8]	39.1 [11.5]	38.8 [11.4]	37.5 [11]	37 [10.8]	36.8 [10.8]	35.5 [10.4]	36.5 [10.7]	36.2 [10.6]	35 [10.2]	36.4 [10.7]	36.2 [10.6]	34.9 [10.2]
		Sens BTUH [kW]	25 [7.3]	24.5 [7.2]	22.3 [6.5]	29.2 [8.6]	28.7 [8.4]	26.1 [7.7]	32.7 [9.6]	32.1 [9.4]	29.3 [8.6]	34.4 [10.1]	33.8 [9.9]	30.7 [9]	36 [10.6]	35.4 [10.4]	32.2 [9.4]
		Power	2.5	2.5	2.4	2.5	2.5	2.4	2.5	2.5	2.4	2.5	2.5	2.4	2.5	2.5	2.4
	85ºF [29.4ºC]	Total BTUH [kW]	40.8 [12]	40.6 [11.9]	39.1 [11.5]	37.8 [11.1]	37.5 [11]	36.2 [10.6]	35.7 [10.5]	35.4 [10.4]	34.2 [10]	35.2 [10.3]	34.9 [10.2]	33.7 [9.9]	35.1 [10.3]	34.8 [10.2]	33.6 [9.9]
		Sens BTUH [kW]	24.3 [7.1]	23.8 [7]	21.7 [6.4]	28.5 [8.3]	28 [8.2]	25.5 [7.5]	32 [9.4]	31.4 [9.2]	28.6 [8.4]	33.6 [9.9]	33.1 [9.7]	30.1 [8.8]	35.1 [10.3]	34.7 [10.2]	31.6 [9.3]
		Power	2.6	2.6	2.6	2.6	2.6	2.6	2.6	2.6	2.5	2.6	2.6	2.5	2.6	2.6	2.5
	90ºF [32.2ºC]	Total BTUH [kW]	39.5 [11.6]	39.2 [11.5]	37.9 [11.1]	36.4 [10.7]	36.2 [10.6]	34.9 [10.2]	34.3 [10.1]	34.1 [10]	32.9 [9.6]	33.8 [9.9]	33.6 [9.8]	32.4 [9.5]	33.7 [9.9]	33.5 [9.8]	32.3 [9.5]
		Sens BTUH [kW]	23.6 [6.9]	23.2 [6.8]	21.1 [6.2]	27.8 [8.1]	27.3 [8]	24.9 [7.3]	31.3 [9.2]	30.8 [9]	28 [8.2]	33 [9.7]	32.4 [9.5]	29.5 [8.6]	33.7 [9.9]	33.5 [9.8]	31 [9.1]
		Power	2.7	2.7	2.7	2.7	2.7	2.7	2.7	2.7	2.7	2.7	2.7	2.7	2.7	2.7	2.7
	95ºF [35.0ºC]	Total BTUH [kW]	38.2 [11.2]	37.9 [11.1]	36.6 [10.7]	35.1 [10.3]	34.9 [10.2]	33.6 [9.9]	33 [9.7]	32.8 [9.6]	31.6 [9.3]	32.5 [9.5]	32.3 [9.5]	31.1 [9.1]	32.4 [9.5]	32.2 [9.4]	31 [9.1]
		Sens BTUH [kW]	22.9 [6.7]	22.5 [6.6]	20.5 [6]	27.1 [8]	26.7 [7.8]	24.3 [7.1]	30.6 [9]	30.1 [8.8]	27.4 [8]	32.3 [9.5]	31.7 [9.3]	28.9 [8.5]	32.4 [9.5]	32.2 [9.4]	30.4 [8.9]
		Power	2.9	2.9	2.8	2.9	2.9	2.8	2.9	2.9	2.8	2.9	2.8	2.8	2.9	2.8	2.8
	100ºF [37.8ºC]	Total BTUH [kW]	36.8 [10.8]	36.6 [10.7]	35.3 [10.3]	33.8 [9.9]	33.5 [9.8]	32.3 [9.5]	31.7 [9.3]	31.4 [9.2]	30.3 [8.9]	31.1 [9.1]	30.9 [9.1]	29.8 [8.7]	31.1 [9.1]	30.8 [9]	29.8 [8.7]
		Sens BTUH [kW]	22.3 [6.5]	21.9 [6.4]	19.9 [5.8]	26.5 [7.8]	26 [7.6]	23.7 [6.9]	30 [8.8]	29.5 [8.6]	26.8 [7.9]	31.1 [9.1]	30.9 [9.1]	28.3 [8.3]	31.1 [9.1]	30.8 [9]	29.8 [8.7]
		Power	3	3	3	3	3	3	3	3	2.9	3	3	2.9	3	3	2.9
	105ºF [40.6ºC]	Total BTUH [kW]	35.5 [10.4]	35.2 [10.3]	34 [10]	32.4 [9.5]	32.2 [9.4]	31.1 [9.1]	30.3 [8.9]	30.1 [8.8]	29.1 [8.5]	29.8 [8.7]	29.6 [8.7]	28.6 [8.4]	29.7 [8.7]	29.5 [8.6]	28.5 [8.3]
		Sens BTUH [kW]	21.7 [6.3]	21.3 [6.2]	19.4 [5.7]	25.9 [7.6]	25.4 [7.4]	23.1 [6.8]	29.4 [8.6]	28.9 [8.5]	26.3 [7.7]	29.8 [8.7]	29.6 [8.7]	27.7 [8.1]	29.7 [8.7]	29.5 [8.6]	28.5 [8.3]
		Power	3.2	3.2	3.1	3.2	3.2	3.1	3.2	3.2	3.1	3.2	3.1	3.1	3.2	3.1	3.1
	110ºF [43.3ºC]	Total BTUH [kW]	34.1 [10]	33.9 [9.9]	32.7 [9.6]	31.1 [9.1]	30.8 [9]	29.8 [8.7]	29 [8.5]	28.8 [8.4]	27.8 [8.1]	28.4 [8.3]	28.3 [8.3]	27.3 [8]	28.4 [8.3]	28.2 [8.3]	27.2 [8]
		Sens BTUH [kW]	21.1 [6.2]	20.7 [6.1]	18.8 [5.5]	25.3 [7.4]	24.8 [7.3]	22.6 [6.6]	28.8 [8.4]	28.3 [8.3]	25.7 [7.5]	28.4 [8.3]	28.3 [8.3]	27.2 [8]	28.4 [8.3]	28.2 [8.3]	27.2 [8]
		Power	3.3	3.3	3.3	3.3	3.3	3.3	3.3	3.3	3.3	3.3	3.3	3.3	3.3	3.3	3.2
	115ºF [46.1ºC]	Total BTUH [kW]	32.8 [9.6]	32.6 [9.5]	31.4 [9.2]	29.7 [8.7]	29.5 [8.6]	28.5 [8.3]	27.6 [8.1]	27.4 [8]	26.5 [7.8]	27.1 [7.9]	26.9 [7.9]	26 [7.6]	27 [7.9]	26.8 [7.9]	25.9 [7.6]
		Sens BTUH [kW]	20.5 [6]	20.1 [5.9]	18.3 [5.4]	24.7 [7.2]	24.2 [7.1]	22.1 [6.5]	27.6 [8.1]	27.4 [8]	25.2 [7.4]	27.1 [7.9]	26.9 [7.9]	26 [7.6]	27 [7.9]	26.8 [7.9]	25.9 [7.6]
		Power	3.5	3.5	3.4	3.5	3.5	3.4	3.5	3.5	3.4	3.5	3.5	3.4	3.5	3.5	3.4
	120ºF [48.9ºC]	Total BTUH [kW]	31.4 [9.2]	31.2 [9.1]	30.1 [8.8]	28.4 [8.3]	28.2 [8.3]	27.2 [8]	26.3 [7.7]	26.1 [7.6]	25.2 [7.4]	25.8 [7.5]	25.6 [7.5]	24.7 [7.2]	25.7 [7.5]	25.5 [7.5]	24.6 [7.2]
		Sens BTUH [kW]	19.9 [5.8]	19.6 [5.7]	17.8 [5.2]	24.1 [7.1]	23.7 [6.9]	21.6 [6.3]	26.3 [7.7]	26.1 [7.6]	24.7 [7.2]	25.8 [7.5]	25.6 [7.5]	24.7 [7.2]	25.7 [7.5]	25.5 [7.5]	24.6 [7.2]
		Power	3.7	3.7	3.6	3.7	3.7	3.6	3.7	3.7	3.6	3.7	3.7	3.6	3.7	3.7	3.6
	125ºF [51.7ºC]	Total BTUH [kW]	30.1 [8.8]	29.9 [8.8]	28.8 [8.5]	27 [7.9]	26.8 [7.9]	25.9 [7.6]	24.9 [7.3]	24.8 [7.3]	23.9 [7]	24.4 [7.2]	24.2 [7.1]	23.4 [6.9]	24.3 [7.1]	24.2 [7.1]	23.3 [6.8]
		Sens BTUH [kW]	19.4 [5.7]	19 [5.6]	17.3 [5.1]	23.6 [6.9]	23.2 [6.8]	21.1 [6.2]	24.9 [7.3]	24.8 [7.3]	23.9 [7]	24.4 [7.2]	24.2 [7.1]	23.4 [6.9]	24.3 [7.1]	24.2 [7.1]	23.3 [6.8]
		Power	3.9	3.9	3.8	3.9	3.9	3.8	3.9	3.9	3.8	3.9	3.9	3.8	3.9	3.8	3.8

NOTES:
DR —Depression ratio Total —Total capacity x 1000 BTUH
dbE —Entering air dry bulb Sens —Sensible capacity x 1000 BTUH When the entering air dry bulb is other than 80°F [27°C], adjust the sensible
wbE—Entering air wet bulb Power—KW input capacity from the table by adding [1.10 x CFM x (1 – DR) x (dbE – 80)].

Appendix D – Cooling Data for 4Ton

COOLING PERFORMANCE DATA - (-)ACCZR048A																	
Entering Indoor Air @ 80ºF [26.7ºC] dbE																	
wbE			71ºF [21.7ºC]			67ºF [19.4ºC]			63ºF [17.2ºC]			61ºF [16.1ºC]			59ºF [15.0ºC]		
CFM [L/s]			1800 [850]	1730 [816]	1400 [661]	1800 [850]	1730 [816]	1400 [661]	1800 [850]	1730 [816]	1400 [661]	1800 [850]	1730 [816]	1400 [661]	1800 [850]	1730 [816]	1400 [661]
DR			0.23	0.22	0.18	0.23	0.22	0.18	0.23	0.22	0.18	0.23	0.22	0.18	0.23	0.22	0.18
Outdoor Dry Bulb Temperature	75ºF [23.9ºC]	Total BTUH [kW]	57.9 [17]	57.5 [16.8]	55.5 [16.3]	53.8 [15.8]	53.4 [15.6]	51.5 [15.1]	50.6 [14.8]	50.2 [14.7]	48.5 [14.2]	49.5 [14.5]	49.2 [14.4]	47.5 [13.9]	48.9 [14.3]	48.5 [14.2]	46.9 [13.7]
		Sens BTUH [kW]	32.7 [9.6]	32.1 [9.4]	29.3 [8.6]	39.1 [11.5]	38.4 [11.3]	35 [10.2]	44.4 [13]	43.6 [12.8]	39.7 [11.6]	46.5 [13.6]	45.7 [13.4]	41.6 [12.2]	48.1 [14.1]	47.2 [13.8]	43 [12.6]
		Power	3.1	3.1	3	3.1	3	3	3	3	3	3	3	3	3	3	3
	80ºF [26.7ºC]	Total BTUH [kW]	56.3 [16.5]	55.9 [16.4]	54 [15.8]	52.2 [15.3]	51.8 [15.2]	50 [14.7]	49 [14.4]	48.7 [14.3]	47 [13.8]	47.9 [14.1]	47.6 [13.9]	45.9 [13.5]	47.3 [13.9]	47 [13.8]	45.3 [13.3]
		Sens BTUH [kW]	31.9 [9.4]	31.3 [9.2]	28.5 [8.4]	38.3 [11.2]	37.6 [11]	34.2 [10]	43.6 [12.8]	42.8 [12.5]	39 [11.4]	45.7 [13.4]	44.8 [13.1]	40.8 [12]	47.2 [13.8]	46.4 [13.6]	42.2 [12.4]
		Power	3.2	3.2	3.1	3.2	3.2	3.1	3.2	3.2	3.1	3.2	3.2	3.1	3.2	3.2	3.1
	85ºF [29.4ºC]	Total BTUH [kW]	54.7 [16]	54.3 [15.9]	52.4 [15.4]	50.6 [14.8]	50.2 [14.7]	48.5 [14.2]	47.4 [13.9]	47.1 [13.8]	45.4 [13.3]	46.3 [13.6]	46 [13.5]	44.4 [13]	45.7 [13.4]	45.3 [13.3]	43.8 [12.8]
		Sens BTUH [kW]	31 [9.1]	30.5 [8.9]	27.8 [8.1]	37.4 [11]	36.7 [10.8]	33.5 [9.8]	42.7 [12.5]	42 [12.3]	38.2 [11.2]	44.8 [13.1]	44 [12.9]	40.1 [11.7]	45.7 [13.4]	45.3 [13.3]	41.5 [12.2]
		Power	3.4	3.3	3.3	3.4	3.3	3.3	3.3	3.3	3.3	3.3	3.3	3.3	3.3	3.3	3.3
	90ºF [32.2ºC]	Total BTUH [kW]	53 [15.5]	52.6 [15.4]	50.8 [14.9]	48.9 [14.3]	48.5 [14.2]	46.9 [13.7]	45.7 [13.4]	45.4 [13.3]	43.8 [12.8]	44.6 [13.1]	44.3 [13]	42.8 [12.5]	44 [12.9]	43.7 [12.8]	42.2 [12.4]
		Sens BTUH [kW]	30.2 [8.8]	29.6 [8.7]	27 [7.9]	36.5 [10.7]	35.9 [10.5]	32.7 [9.6]	41.9 [12.3]	41.1 [12]	37.4 [11]	43.9 [12.9]	43.1 [12.6]	39.3 [11.5]	44 [12.9]	43.7 [12.8]	40.7 [11.9]
		Power	3.5	3.5	3.5	3.5	3.5	3.4	3.5	3.5	3.4	3.5	3.5	3.4	3.5	3.5	3.4
	95ºF [35.0ºC]	Total BTUH [kW]	51.3 [15]	50.9 [14.9]	49.1 [14.4]	47.2 [13.8]	46.8 [13.7]	45.2 [13.2]	44 [12.9]	43.7 [12.8]	42.2 [12.4]	42.9 [12.6]	42.6 [12.5]	41.1 [12]	42.3 [12.4]	42 [12.3]	40.5 [11.9]
		Sens BTUH [kW]	29.2 [8.6]	28.7 [8.4]	26.1 [7.7]	35.6 [10.4]	35 [10.2]	31.8 [9.3]	40.9 [12]	40.2 [11.8]	36.6 [10.7]	42.9 [12.6]	42.2 [12.4]	38.5 [11.3]	42.3 [12.4]	42 [12.3]	39.9 [11.7]
		Power	3.7	3.7	3.6	3.7	3.7	3.6	3.7	3.7	3.6	3.7	3.7	3.6	3.7	3.7	3.6
	100ºF [37.8ºC]	Total BTUH [kW]	49.5 [14.5]	49.1 [14.4]	47.4 [13.9]	45.4 [13.3]	45.1 [13.2]	43.5 [12.7]	42.2 [12.4]	41.9 [12.3]	40.5 [11.9]	41.1 [12.1]	40.8 [12]	39.4 [11.6]	40.5 [11.9]	40.2 [11.8]	38.8 [11.4]
		Sens BTUH [kW]	28.3 [8.3]	27.8 [8.1]	25.3 [7.4]	34.7 [10.2]	34 [10]	31 [9.1]	40 [11.7]	39.3 [11.5]	35.8 [10.5]	41.1 [12.1]	40.8 [12]	37.6 [11]	40.5 [11.9]	40.2 [11.8]	38.8 [11.4]
		Power	3.9	3.9	3.8	3.9	3.9	3.8	3.9	3.9	3.8	3.9	3.9	3.8	3.9	3.9	3.8
	105ºF [40.6ºC]	Total BTUH [kW]	47.7 [14]	47.3 [13.9]	45.7 [13.4]	43.6 [12.8]	43.3 [12.7]	41.8 [12.2]	40.4 [11.8]	40.1 [11.8]	38.7 [11.3]	39.3 [11.5]	39 [11.4]	37.7 [11]	38.7 [11.3]	38.4 [11.3]	37.1 [10.9]
		Sens BTUH [kW]	27.3 [8]	26.8 [7.9]	24.4 [7.2]	33.7 [9.9]	33.1 [9.7]	30.1 [8.8]	39 [11.4]	38.3 [11.2]	34.9 [10.2]	39.3 [11.5]	39 [11.4]	36.8 [10.8]	38.7 [11.3]	38.4 [11.3]	37.1 [10.9]
		Power	4.1	4.1	4	4.1	4.1	4	4.1	4.1	4	4.1	4.1	4	4.1	4.1	4
	110ºF [43.3ºC]	Total BTUH [kW]	45.8 [13.4]	45.5 [13.3]	43.9 [12.9]	41.7 [12.2]	41.4 [12.1]	40 [11.7]	38.5 [11.3]	38.3 [11.2]	36.9 [10.8]	37.5 [11]	37.2 [10.9]	35.9 [10.5]	36.8 [10.8]	36.5 [10.7]	35.3 [10.3]
		Sens BTUH [kW]	26.3 [7.7]	25.9 [7.6]	23.6 [6.9]	32.7 [9.6]	32.1 [9.4]	29.2 [8.6]	38 [11.1]	37.3 [10.9]	34 [10]	37.5 [11]	37.2 [10.9]	35.9 [10.5]	36.8 [10.8]	36.5 [10.7]	35.3 [10.3]
		Power	4.3	4.3	4.2	4.3	4.3	4.2	4.3	4.3	4.2	4.3	4.3	4.2	4.3	4.3	4.2
	115ºF [46.1ºC]	Total BTUH [kW]	43.9 [12.9]	43.6 [12.8]	42.1 [12.3]	39.8 [11.7]	39.5 [11.6]	38.1 [11.2]	36.6 [10.7]	36.4 [10.7]	35.1 [10.3]	35.5 [10.4]	35.3 [10.3]	34.1 [10]	34.9 [10.2]	34.6 [10.2]	33.4 [9.8]
		Sens BTUH [kW]	25.3 [7.4]	24.8 [7.3]	22.6 [6.6]	31.7 [9.3]	31.1 [9.1]	28.3 [8.3]	36.6 [10.7]	36.3 [10.6]	33.1 [9.7]	35.5 [10.4]	35.3 [10.3]	34.1 [10]	34.9 [10.2]	34.6 [10.2]	33.4 [9.8]
		Power	4.5	4.5	4.5	4.5	4.5	4.4	4.5	4.5	4.4	4.5	4.5	4.4	4.5	4.5	4.4
	120ºF [48.9ºC]	Total BTUH [kW]	42 [12.3]	41.6 [12.2]	40.2 [11.8]	37.8 [11.1]	37.6 [11]	36.3 [10.6]	34.7 [10.2]	34.4 [10.1]	33.2 [9.7]	33.6 [9.8]	33.3 [9.8]	32.2 [9.4]	32.9 [9.7]	32.7 [9.6]	31.6 [9.3]
		Sens BTUH [kW]	24.3 [7.1]	23.8 [7]	21.7 [6.4]	30.6 [9]	30.1 [8.8]	27.4 [8]	34.7 [10.2]	34.4 [10.1]	32.2 [9.4]	33.6 [9.8]	33.3 [9.8]	32.2 [9.4]	32.9 [9.7]	32.7 [9.6]	31.6 [9.3]
		Power	4.8	4.8	4.7	4.8	4.8	4.7	4.8	4.7	4.7	4.8	4.7	4.7	4.8	4.7	4.7
	125ºF [51.7ºC]	Total BTUH [kW]	39.9 [11.7]	39.7 [11.6]	38.3 [11.2]	35.8 [10.5]	35.6 [10.4]	34.3 [10.1]	32.7 [9.6]	32.4 [9.5]	31.3 [9.2]	31.6 [9.3]	31.4 [9.2]	30.3 [8.9]	30.9 [9.1]	30.7 [9]	29.7 [8.7]
		Sens BTUH [kW]	23.2 [6.8]	22.8 [6.7]	20.7 [6.1]	29.6 [8.7]	29 [8.5]	26.4 [7.7]	32.7 [9.6]	32.4 [9.5]	31.2 [9.1]	31.6 [9.3]	31.4 [9.2]	30.3 [8.9]	30.9 [9.1]	30.7 [9]	29.7 [8.7]
		Power	5	5	4.9	5	5	4.9	5	5	4.9	5	5	4.9	5	5	4.9

DR —Depression ratio Total —Total capacity x 1000 BTUH NOTES:
dbE —Entering air dry bulb Sens —Sensible capacity x 1000 BTUH When the entering air dry bulb is other than 80°F [27°C], adjust the sensible
wbE—Entering air wet bulb Power—KW input capacity from the table by adding [1.10 x CFM x (1 – DR) x (dbE – 80)].

P. APPENDICES

Appendix D – Cooling Data for 5Ton

COOLING PERFORMANCE DATA - (-)ACCZR060A																	
Entering Indoor Air @ 80ºF [26.7ºC] dbE																	
wbE			71ºF [21.7ºC]			67ºF [19.4ºC]			63ºF [17.2ºC]			61ºF [16.1ºC]			59ºF [15.0ºC]		
CFM [L/s]			2250 [1062]	1950 [920]	1750 [826]	2250 [1062]	1950 [920]	1750 [826]	2250 [1062]	1950 [920]	1750 [826]	2250 [1062]	1950 [920]	1750 [826]	2250 [1062]	1950 [920]	1750 [826]
DR			0.21	0.18	0.16	0.21	0.18	0.16	0.21	0.18	0.16	0.21	0.18	0.16	0.21	0.18	0.16
Outdoor Dry Bulb Temperature	75ºF [23.9ºC]	Total BTUH [kW]	72.9 [21.4]	70.9 [20.8]	69.6 [20.4]	68.5 [20.1]	66.7 [19.5]	65.4 [19.2]	64.6 [18.9]	62.9 [18.4]	61.7 [18.1]	62.9 [18.4]	61.2 [17.9]	60.1 [17.6]	61.5 [18]	59.9 [17.5]	58.7 [17.2]
		Sens BTUH [kW]	41.9 [12.3]	39.1 [11.5]	37.2 [10.9]	49.9 [14.6]	46.6 [13.6]	44.4 [13]	56.8 [16.7]	53 [15.5]	50.5 [14.8]	59.7 [17.5]	55.7 [16.3]	53 [15.5]	61.5 [18]	57.8 [16.9]	55 [16.1]
		Power	4	4	4	3.5	3.5	3.5	3	3	3	2.8	2.8	2.7	2.5	2.5	2.5
	80ºF [26.7ºC]	Total BTUH [kW]	71 [20.8]	69.1 [20.2]	67.8 [19.9]	66.6 [19.5]	64.8 [19]	63.6 [18.6]	62.7 [18.4]	61 [17.9]	59.9 [17.5]	61 [17.9]	59.4 [17.4]	58.3 [17.1]	59.6 [17.5]	58 [17]	56.9 [16.7]
		Sens BTUH [kW]	41 [12]	38.2 [11.2]	36.4 [10.7]	49 [14.4]	45.7 [13.4]	43.5 [12.8]	55.9 [16.4]	52.2 [15.3]	49.7 [14.6]	58.8 [17.2]	54.8 [16.1]	52.2 [15.3]	59.6 [17.5]	56.9 [16.7]	54.2 [15.9]
		Power	4.2	4.1	4.1	3.7	3.6	3.6	3.2	3.1	3.1	2.9	2.9	2.8	2.7	2.6	2.6
	85ºF [29.4ºC]	Total BTUH [kW]	69 [20.2]	67.1 [19.7]	65.9 [19.3]	64.6 [18.9]	62.9 [18.4]	61.7 [18.1]	60.7 [17.8]	59.1 [17.3]	58 [17]	59 [17.3]	57.4 [16.8]	56.4 [16.5]	57.6 [16.9]	56 [16.4]	55 [16.1]
		Sens BTUH [kW]	40 [11.7]	37.3 [10.9]	35.5 [10.4]	48 [14.1]	44.8 [13.1]	42.7 [12.5]	54.9 [16.1]	51.3 [15]	48.8 [14.3]	57.8 [16.9]	53.9 [15.8]	51.3 [15]	57.6 [16.9]	56 [16.4]	53.3 [15.6]
		Power	4.4	4.3	4.3	3.9	3.8	3.8	3.4	3.3	3.3	3.1	3.1	3.1	2.9	2.8	2.8
	90ºF [32.2ºC]	Total BTUH [kW]	67 [19.6]	65.2 [19.1]	63.9 [18.7]	62.6 [18.3]	60.9 [17.8]	59.7 [17.5]	58.7 [17.2]	57.1 [16.7]	56 [16.4]	57 [16.7]	55.4 [16.2]	54.4 [15.9]	55.6 [16.3]	54.1 [15.8]	53.1 [15.5]
		Sens BTUH [kW]	39 [11.4]	36.4 [10.7]	34.6 [10.1]	47 [13.8]	43.9 [12.9]	41.8 [12.2]	53.9 [15.8]	50.3 [14.7]	47.9 [14]	56.7 [16.6]	52.9 [15.5]	50.4 [14.8]	55.6 [16.3]	54.1 [15.8]	52.4 [15.4]
		Power	4.7	4.6	4.6	4.2	4.1	4.1	3.7	3.6	3.6	3.4	3.4	3.4	3.2	3.2	3.1
	95ºF [35.0ºC]	Total BTUH [kW]	64.9 [19]	63.1 [18.5]	61.9 [18.1]	60.5 [17.7]	58.8 [17.2]	57.7 [16.9]	56.6 [16.6]	55 [16.1]	54 [15.8]	54.9 [16.1]	53.4 [15.6]	52.4 [15.4]	53.5 [15.7]	52 [15.2]	51 [15]
		Sens BTUH [kW]	37.9 [11.1]	35.3 [10.4]	33.6 [9.9]	45.9 [13.5]	42.8 [12.6]	40.8 [11.9]	52.8 [15.5]	49.3 [14.4]	46.9 [13.7]	54.9 [16.1]	51.9 [15.2]	49.4 [14.5]	53.5 [15.7]	52 [15.2]	51 [15]
		Power	5.1	5	5	4.6	4.6	4.5	4.1	4.1	4	3.9	3.8	3.8	3.6	3.6	3.5
	100ºF [37.8ºC]	Total BTUH [kW]	62.7 [18.4]	61 [17.9]	59.9 [17.5]	58.3 [17.1]	56.7 [16.6]	55.7 [16.3]	54.4 [15.9]	52.9 [15.5]	51.9 [15.2]	52.7 [15.5]	51.3 [15]	50.3 [14.8]	51.3 [15]	49.9 [14.6]	49 [14.4]
		Sens BTUH [kW]	36.7 [10.8]	34.3 [10]	32.6 [9.6]	44.7 [13.1]	41.7 [12.2]	39.7 [11.6]	51.7 [15.1]	48.2 [14.1]	45.9 [13.4]	52.7 [15.5]	50.8 [14.9]	48.4 [14.2]	51.3 [15]	49.9 [14.6]	49 [14.4]
		Power	5.6	5.6	5.5	5.1	5.1	5	4.6	4.6	4.5	4.4	4.3	4.3	4.1	4.1	4
	105ºF [40.6ºC]	Total BTUH [kW]	60.5 [17.7]	58.9 [17.2]	57.8 [16.9]	56.1 [16.4]	54.6 [16]	53.6 [15.7]	52.2 [15.3]	50.8 [14.9]	49.8 [14.6]	50.5 [14.8]	49.1 [14.4]	48.2 [14.1]	49.1 [14.4]	47.8 [14]	46.9 [13.7]
		Sens BTUH [kW]	35.5 [10.4]	33.1 [9.7]	31.5 [9.2]	43.5 [12.8]	40.6 [11.9]	38.7 [11.3]	50.4 [14.8]	47.1 [13.8]	44.8 [13.1]	50.5 [14.8]	49.1 [14.4]	47.3 [13.9]	49.1 [14.4]	47.8 [14]	46.9 [13.7]
		Power	6.3	6.2	6.1	5.8	5.7	5.6	5.3	5.2	5.1	5	4.9	4.9	4.8	4.7	4.7
	110ºF [43.3ºC]	Total BTUH [kW]	58.2 [17.1]	56.6 [16.6]	55.6 [16.3]	53.8 [15.8]	52.4 [15.3]	51.4 [15.1]	49.9 [14.6]	48.6 [14.2]	47.7 [14]	48.2 [14.1]	46.9 [13.8]	46.1 [13.5]	46.8 [13.7]	45.6 [13.3]	44.7 [13.1]
		Sens BTUH [kW]	34.2 [10]	31.9 [9.4]	30.4 [8.9]	42.2 [12.4]	39.4 [11.5]	37.5 [11]	49.2 [14.4]	45.9 [13.4]	43.7 [12.8]	48.2 [14.1]	46.9 [13.8]	46.1 [13.5]	46.8 [13.7]	45.6 [13.3]	44.7 [13.1]
		Power	7	6.9	6.8	6.5	6.4	6.3	6	5.9	5.9	5.7	5.7	5.6	5.5	5.4	5.4
	115ºF [46.1ºC]	Total BTUH [kW]	55.9 [16.4]	54.4 [15.9]	53.4 [15.6]	51.5 [15.1]	50.1 [14.7]	49.2 [14.4]	47.6 [13.9]	46.3 [13.6]	45.4 [13.3]	45.9 [13.5]	44.7 [13.1]	43.8 [12.8]	44.5 [13]	43.3 [12.7]	42.5 [12.4]
		Sens BTUH [kW]	32.9 [9.6]	30.7 [9]	29.2 [8.6]	40.9 [12]	38.2 [11.2]	36.3 [10.6]	47.6 [13.9]	44.6 [13.1]	42.5 [12.4]	45.9 [13.5]	44.7 [13.1]	43.8 [12.8]	44.5 [13]	43.3 [12.7]	42.5 [12.4]
		Power	7.8	7.7	7.6	7.3	7.2	7.1	6.8	6.7	6.7	6.6	6.5	6.4	6.3	6.2	6.2
	120ºF [48.9ºC]	Total BTUH [kW]	53.5 [15.7]	52.1 [15.3]	51.1 [15]	49.1 [14.4]	47.8 [14]	46.9 [13.7]	45.2 [13.2]	44 [12.9]	43.2 [12.6]	43.5 [12.8]	42.3 [12.4]	41.6 [12.2]	42.1 [12.3]	41 [12]	40.2 [11.8]
		Sens BTUH [kW]	31.5 [9.2]	29.4 [8.6]	28 [8.2]	39.5 [11.6]	36.8 [10.8]	35.1 [10.3]	45.2 [13.2]	43.3 [12.7]	41.2 [12.1]	43.5 [12.8]	42.3 [12.4]	41.6 [12.2]	42.1 [12.3]	41 [12]	40.2 [11.8]
		Power	8.7	8.6	8.5	8.2	8.1	8.1	7.7	7.6	7.6	7.5	7.4	7.3	7.2	7.1	7.1
	125ºF [51.7ºC]	Total BTUH [kW]	51.1 [15]	49.7 [14.6]	48.7 [14.3]	46.7 [13.7]	45.4 [13.3]	44.6 [13.1]	42.8 [12.5]	41.6 [12.2]	40.8 [12]	41.1 [12]	40 [11.7]	39.2 [11.5]	39.7 [11.6]	38.6 [11.3]	37.9 [11.1]
		Sens BTUH [kW]	30 [8.8]	28 [8.2]	26.6 [7.8]	38 [11.1]	35.5 [10.4]	33.8 [9.9]	42.8 [12.5]	41.6 [12.2]	39.9 [11.7]	41.1 [12]	40 [11.7]	39.2 [11.5]	39.7 [11.6]	38.6 [11.3]	37.9 [11.1]
		Power	9.8	9.6	9.6	9.3	9.1	9.1	8.8	8.7	8.6	8.5	8.4	8.3	8.3	8.2	8.1

DR —Depression ratio Total —Total capacity x 1000 BTUH NOTES:
dbE —Entering air dry bulb Sens —Sensible capacity x 1000 BTUH When the entering air dry bulb is other than 80°F [27°C], adjust the sensible
wbE—Entering air wet bulb Power—KW input capacity from the table by adding [1.10 x CFM x (1 – DR) x (dbE – 80)].

Appendix D – Cooling Data for 6Ton

COOLING PERFORMANCE DATA - (-)ACCZT072A																	
Entering Indoor Air @ 80ºF [26.7ºC] dbE																	
wbE			71ºF [21.7ºC]			67ºF [19.4ºC]			63ºF [17.2ºC]			61ºF [16.1ºC]			59ºF [15.0ºC]		
CFM [L/s]			2700 [1274]	2395 [1130]	2100 [991]	2700 [1274]	2395 [1130]	2100 [991]	2700 [1274]	2395 [1130]	2100 [991]	2700 [1274]	2395 [1130]	2100 [991]	2700 [1274]	2395 [1130]	2100 [991]
DR			0.17	0.15	0.12	0.17	0.15	0.12	0.17	0.15	0.12	0.17	0.15	0.12	0.17	0.15	0.12
Outdoor Dry Bulb Temperature	75ºF [23.9ºC]	Total BTUH [kW]	85.5 [25]	83.5 [24.5]	81.7 [23.9]	80 [23.5]	78.2 [22.9]	76.5 [22.4]	75.2 [22]	73.5 [21.5]	71.8 [21.1]	73 [21.4]	71.3 [20.9]	69.7 [20.4]	70.9 [20.8]	69.3 [20.3]	67.7 [19.8]
		Sens BTUH [kW]	51.4 [15.1]	48.5 [14.2]	45.8 [13.4]	60.1 [17.6]	56.7 [16.6]	53.4 [15.7]	68.2 [20]	64.4 [18.9]	60.7 [17.8]	72.2 [21.1]	68.1 [20]	64.2 [18.8]	70.9 [20.8]	69.3 [20.3]	67.6 [19.8]
		Power	4.2	4.2	4.1	4.2	4.1	4.1	4.2	4.1	4.1	4.1	4.1	4.1	4.1	4.1	4
	80ºF [26.7ºC]	Total BTUH [kW]	83.9 [24.6]	82 [24]	80.2 [23.5]	78.5 [23]	76.7 [22.5]	75 [22]	73.6 [21.6]	72 [21.1]	70.4 [20.6]	71.4 [20.9]	69.8 [20.5]	68.2 [20]	69.3 [20.3]	67.7 [19.9]	66.2 [19.4]
		Sens BTUH [kW]	50.7 [14.9]	47.9 [14]	45.1 [13.2]	59.4 [17.4]	56 [16.4]	52.8 [15.5]	67.6 [19.8]	63.8 [18.7]	60.1 [17.6]	71.4 [20.9]	67.5 [19.8]	63.6 [18.6]	69.3 [20.3]	67.7 [19.9]	66.2 [19.4]
		Power	4.5	4.4	4.4	4.4	4.4	4.3	4.4	4.3	4.3	4.4	4.3	4.3	4.4	4.3	4.3
	85ºF [29.4ºC]	Total BTUH [kW]	82.2 [24.1]	80.3 [23.5]	78.5 [23]	76.7 [22.5]	75 [22]	73.3 [21.5]	71.9 [21.1]	70.2 [20.6]	68.7 [20.1]	69.6 [20.4]	68.1 [19.9]	66.5 [19.5]	67.6 [19.8]	66 [19.3]	64.6 [18.9]
		Sens BTUH [kW]	49.9 [14.6]	47.1 [13.8]	44.4 [13]	58.5 [17.2]	55.2 [16.2]	52.1 [15.3]	66.7 [19.5]	63 [18.5]	59.3 [17.4]	69.6 [20.4]	66.7 [19.5]	62.8 [18.4]	67.6 [19.8]	66 [19.3]	64.6 [18.9]
		Power	4.7	4.7	4.6	4.7	4.6	4.6	4.7	4.6	4.6	4.6	4.6	4.5	4.6	4.6	4.5
	90ºF [32.2ºC]	Total BTUH [kW]	80.2 [23.5]	78.4 [23]	76.6 [22.5]	74.8 [21.9]	73.1 [21.4]	71.5 [20.9]	69.9 [20.5]	68.3 [20]	66.8 [19.6]	67.7 [19.8]	66.2 [19.4]	64.7 [19]	65.6 [19.2]	64.1 [18.8]	62.7 [18.4]
		Sens BTUH [kW]	48.9 [14.3]	46.1 [13.5]	43.5 [12.7]	57.5 [16.9]	54.3 [15.9]	51.2 [15]	65.7 [19.3]	62 [18.2]	58.4 [17.1]	67.7 [19.8]	65.7 [19.3]	61.9 [18.1]	65.6 [19.2]	64.1 [18.8]	62.7 [18.4]
		Power	5	4.9	4.9	5	4.9	4.9	4.9	4.9	4.8	4.9	4.9	4.8	4.9	4.9	4.8
	95ºF [35.0ºC]	Total BTUH [kW]	78 [22.9]	76.3 [22.4]	74.6 [21.9]	72.6 [21.3]	71 [20.8]	69.4 [20.3]	67.8 [19.9]	66.2 [19.4]	64.7 [19]	65.5 [19.2]	64 [18.8]	62.6 [18.3]	63.4 [18.6]	62 [18.2]	60.6 [17.8]
		Sens BTUH [kW]	47.7 [14]	45 [13.2]	42.4 [12.4]	56.3 [16.5]	53.2 [15.6]	50.1 [14.7]	64.5 [18.9]	60.9 [17.8]	57.4 [16.8]	65.5 [19.2]	64 [18.8]	60.9 [17.8]	63.4 [18.6]	62 [18.2]	60.6 [17.8]
		Power	5.3	5.2	5.2	5.3	5.2	5.1	5.2	5.2	5.1	5.2	5.2	5.1	5.2	5.1	5.1
	100ºF [37.8ºC]	Total BTUH [kW]	75.7 [22.2]	74 [21.7]	72.3 [21.2]	70.3 [20.6]	68.7 [20.1]	67.1 [19.7]	65.4 [19.2]	63.9 [18.7]	62.5 [18.3]	63.2 [18.5]	61.7 [18.1]	60.4 [17.7]	61.1 [17.9]	59.7 [17.5]	58.4 [17.1]
		Sens BTUH [kW]	46.4 [13.6]	43.8 [12.8]	41.3 [12.1]	55 [16.1]	51.9 [15.2]	48.9 [14.3]	63.2 [18.5]	59.6 [17.5]	56.2 [16.5]	63.2 [18.5]	61.7 [18.1]	59.7 [17.5]	61.1 [17.9]	59.7 [17.5]	58.4 [17.1]
		Power	5.6	5.5	5.5	5.6	5.5	5.4	5.5	5.5	5.4	5.5	5.5	5.4	5.5	5.5	5.4
	105ºF [40.6ºC]	Total BTUH [kW]	73.1 [21.4]	71.5 [20.9]	69.9 [20.5]	67.7 [19.8]	66.2 [19.4]	64.7 [19]	62.8 [18.4]	61.4 [18]	60 [17.6]	60.6 [17.8]	59.2 [17.4]	57.9 [17]	58.5 [17.1]	57.2 [16.8]	55.9 [16.4]
		Sens BTUH [kW]	44.9 [13.1]	42.4 [12.4]	39.9 [11.7]	53.5 [15.7]	50.5 [14.8]	47.6 [13.9]	61.7 [18.1]	58.2 [17.1]	54.9 [16.1]	60.6 [17.8]	59.2 [17.4]	57.9 [17]	58.5 [17.1]	57.2 [16.8]	55.9 [16.4]
		Power	5.9	5.9	5.8	5.9	5.8	5.8	5.9	5.8	5.7	5.9	5.8	5.7	5.8	5.8	5.7
	110ºF [43.3ºC]	Total BTUH [kW]	70.3 [20.6]	68.8 [20.1]	67.2 [19.7]	64.9 [19]	63.5 [18.6]	62 [18.2]	60.1 [17.6]	58.7 [17.2]	57.4 [16.8]	57.8 [16.9]	56.5 [16.6]	55.2 [16.2]	55.7 [16.3]	54.5 [16]	53.3 [15.6]
		Sens BTUH [kW]	43.2 [12.7]	40.8 [12]	38.4 [11.3]	51.8 [15.2]	48.9 [14.3]	46.1 [13.5]	60 [17.6]	56.7 [16.6]	53.4 [15.6]	57.8 [16.9]	56.5 [16.6]	55.2 [16.2]	55.7 [16.3]	54.5 [16]	53.3 [15.6]
		Power	6.3	6.2	6.1	6.2	6.2	6.1	6.2	6.1	6.1	6.2	6.1	6.1	6.2	6.1	6.1
	115ºF [46.1ºC]	Total BTUH [kW]	67.4 [19.7]	65.8 [19.3]	64.4 [18.9]	61.9 [18.2]	60.5 [17.7]	59.2 [17.3]	57.1 [16.7]	55.8 [16.3]	54.5 [16]	54.8 [16.1]	53.6 [15.7]	52.4 [15.4]	52.8 [15.5]	51.6 [15.1]	50.4 [14.8]
		Sens BTUH [kW]	41.4 [12.1]	39.1 [11.4]	36.8 [10.8]	50 [14.7]	47.2 [13.8]	44.5 [13]	57.1 [16.7]	54.9 [16.1]	51.8 [15.2]	54.8 [16.1]	53.6 [15.7]	52.4 [15.4]	52.8 [15.5]	51.6 [15.1]	50.4 [14.8]
		Power	6.6	6.6	6.5	6.6	6.5	6.5	6.6	6.5	6.4	6.6	6.5	6.4	6.6	6.5	6.4
	120ºF [48.9ºC]	Total BTUH [kW]	64.2 [18.8]	62.7 [18.4]	61.3 [18]	58.8 [17.2]	57.4 [16.8]	56.2 [16.5]	53.9 [15.8]	52.7 [15.4]	51.5 [15.1]	51.7 [15.1]	50.5 [14.8]	49.4 [14.5]	49.6 [14.5]	48.5 [14.2]	47.4 [13.9]
		Sens BTUH [kW]	39.4 [11.5]	37.2 [10.9]	35.1 [10.3]	48 [14.1]	45.4 [13.3]	42.7 [12.5]	53.9 [15.8]	52.7 [15.4]	50 [14.7]	51.7 [15.1]	50.5 [14.8]	49.4 [14.5]	49.6 [14.5]	48.5 [14.2]	47.4 [13.9]
		Power	7	6.9	6.9	7	6.9	6.8	7	6.9	6.8	7	6.9	6.8	6.9	6.9	6.8
	125ºF [51.7ºC]	Total BTUH [kW]	60.8 [17.8]	59.4 [17.4]	58.1 [17]	55.4 [16.2]	54.1 [15.9]	52.9 [15.5]	50.5 [14.8]	49.4 [14.5]	48.3 [14.1]	48.3 [14.2]	47.2 [13.8]	46.1 [13.5]	46.2 [13.5]	45.2 [13.2]	44.1 [12.9]
		Sens BTUH [kW]	37.3 [10.9]	35.2 [10.3]	33.2 [9.7]	45.9 [13.5]	43.3 [12.7]	40.8 [12]	50.5 [14.8]	49.4 [14.5]	48.1 [14.1]	48.3 [14.2]	47.2 [13.8]	46.1 [13.5]	46.2 [13.5]	45.2 [13.2]	44.1 [12.9]
		Power	7.4	7.3	7.3	7.4	7.3	7.2	7.4	7.3	7.2	7.4	7.3	7.2	7.3	7.3	7.2

NOTES:
When the entering air dry bulb is other than 80°F [27°C], adjust the sensible

DR —Depression ratio Total —Total capacity x 1000 BTUH
dbE —Entering air dry bulb Sens —Sensible capacity x 1000 BTUH
wbE—Entering air wet bulb Power—KW input capacity from the table by adding [1.10 x CFM x (1 – DR) x (dbE – 80)].

P. APPENDICES

Appendix D – HumidiDry Data for 3Ton

GROSS SYSTEMS PERFORMANCE DATA (HUMIDIDRY MODE) - (-)ACCZR036											
Entering Indoor Air @ 75ºF [23.9ºC] dbE											
wbE			65.3ºF [18.5ºC]			64ºF [17.8ºC]			62.5ºF [16.9ºC]		
CFM [L/s]			1350 [637]	1200 [566]	1050 [496]	1350 [637]	1200 [566]	1050 [496]	1350 [637]	1200 [566]	1050 [496]
Outdoor Dry Bulb Temperature	60ºF [15.6ºC]	Total BTUH [kW]	20.5 [6]	20 [5.9]	19.6 [5.7]	20.1 [5.9]	19.6 [5.7]	19.2 [5.6]	18.9 [5.5]	18.4 [5.4]	18 [5.3]
		Sens BTUH [kW]	4.8 [1.4]	4.6 [1.3]	4.3 [1.3]	7.5 [2.2]	7.1 [2.1]	6.6 [1.9]	10.7 [3.1]	10.1 [3]	9.5 [2.8]
		Power	2	2	1.9	2	2	1.9	2	2	1.9
	70ºF [21.1ºC]	Total BTUH [kW]	19.6 [5.7]	19.1 [5.6]	18.7 [5.5]	19.1 [5.6]	18.7 [5.5]	18.3 [5.4]	17.9 [5.3]	17.5 [5.1]	17.1 [5]
		Sens BTUH [kW]	4 [1.2]	3.8 [1.1]	3.5 [1]	6.6 [1.9]	6.2 [1.8]	5.9 [1.7]	9.8 [2.9]	9.3 [2.7]	8.7 [2.6]
		Power	2	2	2	2	2	2	2	2	2
	80ºF [26.7ºC]	Total BTUH [kW]	18.3 [5.4]	17.9 [5.2]	17.5 [5.1]	17.9 [5.2]	17.5 [5.1]	17.1 [5]	16.7 [4.9]	16.3 [4.8]	16 [4.7]
		Sens BTUH [kW]	2.9 [0.8]	2.7 [0.8]	2.6 [0.7]	5.5 [1.6]	5.2 [1.5]	4.9 [1.4]	8.7 [2.5]	8.2 [2.4]	7.7 [2.3]
		Power	2.1	2.1	2.1	2.1	2.1	2	2.1	2.1	2.1
	90ºF [32.2ºC]	Total BTUH [kW]	16.8 [4.9]	16.4 [4.8]	16 [4.7]	16.3 [4.8]	16 [4.7]	15.6 [4.6]	15.1 [4.4]	14.8 [4.3]	14.5 [4.2]
		Sens BTUH [kW]	1.5 [0.4]	1.4 [0.4]	1.3 [0.4]	4.1 [1.2]	3.9 [1.1]	3.7 [1.1]	7.3 [2.1]	6.9 [2]	6.5 [1.9]
		Power	2.3	2.2	2.2	2.2	2.2	2.2	2.3	2.2	2.2
	100ºF [37.8ºC]	Total BTUH [kW]	14.9 [4.4]	14.6 [4.3]	14.2 [4.2]	14.5 [4.2]	14.2 [4.1]	13.8 [4.1]	13.3 [3.9]	13 [3.8]	12.7 [3.7]
		Sens BTUH [kW]	-0.1 [0]	-0.1 [0]	-0.1 [0]	2.5 [0.7]	2.4 [0.7]	2.3 [0.7]	5.7 [1.7]	5.4 [1.6]	5.1 [1.5]
		Power	2.5	2.5	2.4	2.5	2.4	2.4	2.5	2.4	2.4
	110ºF [43.3ºC]	Total BTUH [kW]	12.7 [3.7]	12.4 [3.6]	12.2 [3.6]	12.3 [3.6]	12 [3.5]	11.8 [3.4]	11.1 [3.3]	10.9 [3.2]	10.6 [3.1]
		Sens BTUH [kW]	-1.9 [-0.6]	-1.8 [-0.5]	-1.7 [-0.5]	0.7 [0.2]	0.6 [0.2]	0.6 [0.2]	3.9 [1.1]	3.7 [1.1]	3.5 [1]
		Power	2.8	2.7	2.7	2.8	2.7	2.7	2.8	2.7	2.7
	120ºF [48.9ºC]	Total BTUH [kW]	10.2 [3]	10 [2.9]	9.8 [2.9]	9.8 [2.9]	9.6 [2.8]	9.4 [2.7]	8.6 [2.5]	8.4 [2.5]	8.2 [2.4]
		Sens BTUH [kW]	-4 [-1.2]	-3.8 [-1.1]	-3.6 [-1]	-1.4 [-0.4]	-1.3 [-0.4]	-1.3 [-0.4]	1.8 [0.5]	1.7 [0.5]	1.6 [0.5]
		Power	3.1	3.1	3	3.1	3.1	3	3.1	3.1	3

P. APPENDICES

Appendix D – HumidiDry Data for 4Ton

GROSS SYSTEMS PERFORMANCE DATA (HUMIDIDRY MODE) - (-)ACCZR048											
Entering Indoor Air @ 75ºF [23.9ºC] dbE											
wbE			65.3ºF [18.5ºC]			64ºF [17.8ºC]			62.5ºF [16.9ºC]		
CFM [L/s]			1800 [850]	1600 [755]	1400 [661]	1800 [850]	1600 [755]	1400 [661]	1800 [850]	1600 [755]	1400 [661]
Outdoor Dry Bulb Temperature	60ºF [15.6ºC]										
		Total BTUH [kW]	29.2 [8.5]	28.5 [8.4]	27.9 [8.2]	30.1 [8.8]	29.5 [8.6]	28.8 [8.4]	29.3 [8.6]	28.7 [8.4]	28 [8.2]
		Sens BTUH [kW]	9.4 [2.8]	8.9 [2.6]	8.4 [2.5]	12.9 [3.8]	12.2 [3.6]	11.5 [3.4]	15.2 [4.4]	14.3 [4.2]	13.5 [4]
		Power	2.4	2.4	2.3	2.4	2.4	2.3	2.4	2.3	2.3
	70ºF [21.1ºC]										
		Total BTUH [kW]	27.8 [8.1]	27.2 [8]	26.5 [7.8]	28.8 [8.4]	28.1 [8.2]	27.5 [8.1]	27.9 [8.2]	27.3 [8]	26.7 [7.8]
		Sens BTUH [kW]	7.7 [2.3]	7.3 [2.1]	6.8 [2]	11.2 [3.3]	10.6 [3.1]	9.9 [2.9]	13.4 [3.9]	12.7 [3.7]	12 [3.5]
		Power	2.5	2.5	2.5	2.5	2.5	2.4	2.5	2.5	2.4
	80ºF [26.7ºC]										
		Total BTUH [kW]	25.9 [7.6]	25.3 [7.4]	24.7 [7.2]	26.9 [7.9]	26.3 [7.7]	25.7 [7.5]	26 [7.6]	25.5 [7.5]	24.9 [7.3]
		Sens BTUH [kW]	5.7 [1.7]	5.4 [1.6]	5 [1.5]	9.2 [2.7]	8.7 [2.5]	8.2 [2.4]	11.4 [3.3]	10.8 [3.2]	10.2 [3]
		Power	2.7	2.7	2.6	2.7	2.7	2.6	2.7	2.7	2.6
	90ºF [32.2ºC]										
		Total BTUH [kW]	23.5 [6.9]	23 [6.7]	22.4 [6.6]	24.5 [7.2]	23.9 [7]	23.4 [6.9]	23.7 [6.9]	23.1 [6.8]	22.6 [6.6]
		Sens BTUH [kW]	3.4 [1]	3.2 [0.9]	3 [0.9]	6.9 [2]	6.5 [1.9]	6.1 [1.8]	9.1 [2.7]	8.6 [2.5]	8.1 [2.4]
		Power	3	3	2.9	3	2.9	2.9	3	2.9	2.9
	100ºF [37.8ºC]										
		Total BTUH [kW]	20.6 [6]	20.1 [5.9]	19.7 [5.8]	21.6 [6.3]	21.1 [6.2]	20.6 [6]	20.8 [6.1]	20.3 [5.9]	19.8 [5.8]
		Sens BTUH [kW]	0.8 [0.2]	0.7 [0.2]	0.7 [0.2]	4.3 [1.3]	4 [1.2]	3.8 [1.1]	6.5 [1.9]	6.2 [1.8]	5.8 [1.7]
		Power	3.4	3.3	3.3	3.3	3.3	3.3	3.3	3.3	3.3
	110ºF [43.3ºC]										
		Total BTUH [kW]	17.2 [5]	16.8 [4.9]	16.4 [4.8]	18.2 [5.3]	17.8 [5.2]	17.4 [5.1]	17.4 [5.1]	17 [5]	16.6 [4.9]
		Sens BTUH [kW]	-2.1 [-0.6]	-2 [-0.6]	-1.9 [-0.5]	1.4 [0.4]	1.3 [0.4]	1.2 [0.4]	3.7 [1.1]	3.5 [1]	3.3 [1]
		Power	3.8	3.8	3.7	3.8	3.8	3.7	3.8	3.7	3.7
	120ºF [48.9ºC]										
		Total BTUH [kW]	13.3 [3.9]	13 [3.8]	12.7 [3.7]	14.3 [4.2]	14 [4.1]	13.7 [4]	13.5 [3.9]	13.2 [3.9]	12.9 [3.8]
		Sens BTUH [kW]	-5.3 [-1.5]	-5 [-1.5]	-4.7 [-1.4]	-1.8 [-0.5]	-1.7 [-0.5]	-1.6 [-0.5]	0.5 [0.1]	0.5 [0.1]	0.4 [0.1]
		Power	4.4	4.3	4.3	4.3	4.3	4.2	4.3	4.3	4.2

P. APPENDICES

Appendix D – HumidiDry Data for 5Ton

GROSS SYSTEMS PERFORMANCE DATA (HUMIDIDRY MODE) - (-)ACCZR060											
Entering Indoor Air @ 75ºF [23.9ºC] dbE											
wbE			**65.3ºF [18.5ºC]**			**64ºF [17.8ºC]**			**62.5ºF [16.9ºC]**		
CFM [L/s]			2250 [1062]	2000 [944]	1750 [826]	2250 [1062]	2000 [944]	1750 [826]	2250 [1062]	2000 [944]	1750 [826]
Outdoor Dry Bulb Temperature	60ºF [15.6ºC]	Total BTUH [kW]	36.4 [10.7]	35.6 [10.4]	34.8 [10.2]	35.1 [10.3]	34.4 [10.1]	33.6 [9.8]	34.3 [10.1]	33.6 [9.8]	32.8 [9.6]
		Sens BTUH [kW]	9.9 [2.9]	9.4 [2.7]	8.8 [2.6]	14 [4.1]	13.2 [3.9]	12.4 [3.6]	16.6 [4.9]	15.7 [4.6]	14.8 [4.3]
		Power	3.5	3.4	3.4	3.5	3.4	3.4	3.5	3.4	3.4
	70ºF [21.1ºC]	Total BTUH [kW]	34.4 [10.1]	33.6 [9.8]	32.8 [9.6]	33.1 [9.7]	32.4 [9.5]	31.7 [9.3]	32.3 [9.5]	31.6 [9.3]	30.9 [9]
		Sens BTUH [kW]	8.2 [2.4]	7.8 [2.3]	7.3 [2.2]	12.3 [3.6]	11.6 [3.4]	10.9 [3.2]	14.9 [4.4]	14.1 [4.1]	13.3 [3.9]
		Power	3.6	3.5	3.5	3.6	3.5	3.5	3.6	3.5	3.5
	80ºF [26.7ºC]	Total BTUH [kW]	31.7 [9.3]	31 [9.1]	30.3 [8.9]	30.5 [8.9]	29.8 [8.7]	29.2 [8.5]	29.7 [8.7]	29 [8.5]	28.4 [8.3]
		Sens BTUH [kW]	6.1 [1.8]	5.7 [1.7]	5.4 [1.6]	10.1 [3]	9.5 [2.8]	9 [2.6]	12.7 [3.7]	12 [3.5]	11.3 [3.3]
		Power	3.8	3.7	3.7	3.8	3.7	3.7	3.8	3.7	3.7
	90ºF [32.2ºC]	Total BTUH [kW]	28.5 [8.4]	27.9 [8.2]	27.3 [8]	27.3 [8]	26.7 [7.8]	26.1 [7.6]	26.5 [7.8]	25.9 [7.6]	25.3 [7.4]
		Sens BTUH [kW]	3.4 [1]	3.2 [0.9]	3 [0.9]	7.4 [2.2]	7 [2]	6.6 [1.9]	10 [2.9]	9.5 [2.8]	8.9 [2.6]
		Power	4.1	4	4	4.1	4	4	4.1	4	4
	100ºF [37.8ºC]	Total BTUH [kW]	24.8 [7.3]	24.2 [7.1]	23.7 [6.9]	23.5 [6.9]	23 [6.7]	22.5 [6.6]	22.7 [6.7]	22.2 [6.5]	21.7 [6.4]
		Sens BTUH [kW]	0.1 [0]	0.1 [0]	0.1 [0]	4.2 [1.2]	3.9 [1.2]	3.7 [1.1]	6.8 [2]	6.4 [1.9]	6.1 [1.8]
		Power	4.5	4.4	4.4	4.5	4.4	4.4	4.5	4.4	4.4
	110ºF [43.3ºC]	Total BTUH [kW]	20.4 [6]	19.9 [5.8]	19.5 [5.7]	19.2 [5.6]	18.7 [5.5]	18.3 [5.4]	18.3 [5.4]	17.9 [5.3]	17.5 [5.1]
		Sens BTUH [kW]	-3.6 [-1]	-3.4 [-1]	-3.2 [-0.9]	0.4 [0.1]	0.4 [0.1]	0.4 [0.1]	3.1 [0.9]	2.9 [0.9]	2.8 [0.8]
		Power	5	4.9	4.9	5	4.9	4.9	5	4.9	4.9
	120ºF [48.9ºC]	Total BTUH [kW]	15.4 [4.5]	15.1 [4.4]	14.8 [4.3]	14.2 [4.2]	13.9 [4.1]	13.6 [4]	13.4 [3.9]	13.1 [3.8]	12.8 [3.8]
		Sens BTUH [kW]	-7.8 [-2.3]	-7.4 [-2.2]	-7 [-2]	-3.8 [-1.1]	-3.6 [-1]	-3.4 [-1]	-1.1 [-0.3]	-1.1 [-0.3]	-1 [-0.3]
		Power	5.6	5.5	5.5	5.6	5.5	5.5	5.6	5.6	5.5

Appendix D – HumidiDry Data for 6Ton

GROSS SYSTEMS PERFORMANCE DATA (LOW HUMIDIDRY MODE) - (-)ACCZT072 with HUMIDIDRY											
Entering Indoor Air @ 75ºF [23.9ºC] dbE											
wbE			65.3ºF [18.5ºC]			64ºF [17.8ºC]			62.5ºF [16.9ºC]		
CFM [L/s]			2880 [1359]	2400 [1133]	1920 [906]	2880 [1359]	2400 [1133]	1920 [906]	2880 [1359]	2400 [1133]	1920 [906]
Outdoor Dry Bulb Temperature	60ºF [15.6ºC]	Total BTUH [kW]	34 [10]	32.8 [9.6]	31.6 [9.3]	34.2 [10]	33 [9.7]	31.8 [9.3]	34.6 [10.1]	33.4 [9.8]	32.2 [9.4]
		Sens BTUH [kW]	-3.4 [-1]	-3.1 [-0.9]	-2.8 [-0.8]	-5.6 [-1.6]	-5.1 [-1.5]	-4.6 [-1.4]	-8.1 [-2.4]	-7.4 [-2.2]	-6.7 [-2]
		Power	-660.9	-649.5	-638	-792.2	-778.4	-764.7	-957.2	-940.6	-924
	70ºF [21.1ºC]	Total BTUH [kW]	32.8 [9.6]	31.7 [9.3]	30.5 [8.9]	33.1 [9.7]	32 [9.4]	30.8 [9]	33.5 [9.8]	32.3 [9.5]	31.1 [9.1]
		Sens BTUH [kW]	-4.2 [-1.2]	-3.9 [-1.1]	-3.5 [-1]	-6.4 [-1.9]	-5.8 [-1.7]	-5.3 [-1.6]	-8.9 [-2.6]	-8.1 [-2.4]	-7.4 [-2.2]
		Power	-670.8	-659.1	-647.5	-802	-788.1	-774.2	-967.1	-950.3	-933.5
	80ºF [26.7ºC]	Total BTUH [kW]	31.7 [9.3]	30.6 [9]	29.5 [8.7]	32 [9.4]	30.9 [9.1]	29.8 [8.7]	32.4 [9.5]	31.2 [9.2]	30.1 [8.8]
		Sens BTUH [kW]	-5 [-1.5]	-4.6 [-1.3]	-4.2 [-1.2]	-7.2 [-2.1]	-6.6 [-1.9]	-6 [-1.7]	-9.7 [-2.8]	-8.9 [-2.6]	-8 [-2.4]
		Power	-671.2	-659.6	-647.9	-802.5	-788.5	-774.6	-967.5	-950.7	-933.9
	90ºF [32.2ºC]	Total BTUH [kW]	30.7 [9]	29.6 [8.7]	28.5 [8.4]	30.9 [9.1]	29.9 [8.7]	28.8 [8.4]	31.3 [9.2]	30.2 [8.8]	29.1 [8.5]
		Sens BTUH [kW]	-5.8 [-1.7]	-5.3 [-1.6]	-4.8 [-1.4]	-8 [-2.3]	-7.3 [-2.1]	-6.6 [-1.9]	-10.5 [-3.1]	-9.6 [-2.8]	-8.7 [-2.5]
		Power	-662.3	-650.8	-639.3	-793.5	-779.7	-766	-958.5	-941.9	-925.3
	100ºF [37.8ºC]	Total BTUH [kW]	29.6 [8.7]	28.6 [8.4]	27.5 [8.1]	29.9 [8.8]	28.8 [8.4]	27.8 [8.1]	30.2 [8.9]	29.2 [8.5]	28.1 [8.2]
		Sens BTUH [kW]	-6.6 [-1.9]	-6.1 [-1.8]	-5.5 [-1.6]	-8.8 [-2.6]	-8 [-2.4]	-7.3 [-2.1]	-11.3 [-3.3]	-10.3 [-3]	-9.4 [-2.7]
		Power	-643.9	-632.7	-621.5	-775.1	-761.6	-748.2	-940.1	-923.8	-907.5
	110ºF [43.3ºC]	Total BTUH [kW]	28.5 [8.4]	27.5 [8.1]	26.5 [7.8]	28.8 [8.4]	27.8 [8.1]	26.8 [7.9]	29.2 [8.5]	28.1 [8.2]	27.1 [7.9]
		Sens BTUH [kW]	-7.4 [-2.2]	-6.8 [-2]	-6.2 [-1.8]	-9.6 [-2.8]	-8.8 [-2.6]	-7.9 [-2.3]	-12.1 [-3.5]	-11 [-3.2]	-10 [-2.9]
		Power	-616	-605.3	-594.6	-747.3	-734.3	-721.3	-912.3	-896.5	-880.6
	120ºF [48.9ºC]	Total BTUH [kW]	27.5 [8.1]	26.5 [7.8]	25.6 [7.5]	27.8 [8.1]	26.8 [7.9]	25.8 [7.6]	28.1 [8.2]	27.1 [8]	26.1 [7.7]
		Sens BTUH [kW]	-8.2 [-2.4]	-7.5 [-2.2]	-6.8 [-2]	-10.4 [-3]	-9.5 [-2.8]	-8.6 [-2.5]	-12.9 [-3.8]	-11.8 [-3.4]	-10.7 [-3.1]
		Power	-578.8	-568.7	-558.7	-710	-697.7	-685.4	-875.1	-859.9	-844.7

P. APPENDICES

Appendix D – HumidiDry Data for 6Ton

GROSS SYSTEMS PERFORMANCE DATA (HIGH HUMIDIDRY MODE) - (-)ACCZT072 with HUMIDIDRY											
Entering Indoor Air @ 75ºF [23.9ºC] dbE											
wbE			**65.3ºF [18.5ºC]**			**64ºF [17.8ºC]**			**62.5ºF [16.9ºC]**		
CFM [L/s]			1680 [793]	1400 [661]	1120 [529]	1680 [793]	1400 [661]	1120 [529]	1680 [793]	1400 [661]	1120 [529]
Outdoor Dry Bulb Temperature	60ºF [15.6ºC]	Total BTUH [kW]	55.4 [16.2]	53.4 [15.7]	51.5 [15.1]	57 [16.7]	55 [16.1]	53 [15.5]	59.2 [17.3]	57.1 [16.7]	55 [16.1]
		Sens BTUH [kW]	12.1 [3.6]	11.1 [3.3]	10.1 [2.9]	11.3 [3.3]	10.3 [3]	9.3 [2.7]	10.4 [3.1]	9.5 [2.8]	8.6 [2.5]
		Power	3.6	3.5	3.5	3.5	3.4	3.3	3.3	3.2	3.1
	70ºF [21.1ºC]	Total BTUH [kW]	52.5 [15.4]	50.6 [14.8]	48.8 [14.3]	54.1 [15.9]	52.2 [15.3]	50.3 [14.7]	56.2 [16.5]	54.3 [15.9]	52.3 [15.3]
		Sens BTUH [kW]	8.6 [2.5]	7.9 [2.3]	7.1 [2.1]	7.7 [2.3]	7.1 [2.1]	6.4 [1.9]	6.9 [2]	6.3 [1.8]	5.7 [1.7]
		Power	3.7	3.6	3.5	3.5	3.5	3.4	3.3	3.3	3.2
	80ºF [26.7ºC]	Total BTUH [kW]	48.3 [14.2]	46.6 [13.7]	44.9 [13.2]	50 [14.6]	48.2 [14.1]	46.5 [13.6]	52.1 [15.3]	50.3 [14.7]	48.4 [14.2]
		Sens BTUH [kW]	5.1 [1.5]	4.7 [1.4]	4.3 [1.2]	4.3 [1.2]	3.9 [1.1]	3.5 [1]	3.4 [1]	3.1 [0.9]	2.8 [0.8]
		Power	3.9	3.8	3.7	3.7	3.6	3.6	3.5	3.4	3.4
	90ºF [32.2ºC]	Total BTUH [kW]	42.9 [12.6]	41.4 [12.1]	39.9 [11.7]	44.6 [13.1]	43 [12.6]	41.5 [12.2]	46.7 [13.7]	45.1 [13.2]	43.5 [12.7]
		Sens BTUH [kW]	1.8 [0.5]	1.6 [0.5]	1.5 [0.4]	0.9 [0.3]	0.8 [0.2]	0.7 [0.2]	0 [0]	0 [0]	0 [0]
		Power	4.2	4.1	4	4	3.9	3.9	3.8	3.7	3.7
	100ºF [37.8ºC]	Total BTUH [kW]	36.4 [10.7]	35.1 [10.3]	33.8 [9.9]	38 [11.1]	36.7 [10.7]	35.3 [10.4]	40.2 [11.8]	38.7 [11.4]	37.3 [10.9]
		Sens BTUH [kW]	-1.5 [-0.4]	-1.4 [-0.4]	-1.3 [-0.4]	-2.4 [-0.7]	-2.2 [-0.6]	-2 [-0.6]	-3.2 [-1]	-3 [-0.9]	-2.7 [-0.8]
		Power	4.6	4.5	4.4	4.4	4.4	4.3	4.2	4.2	4.1
	110ºF [43.3ºC]	Total BTUH [kW]	28.6 [8.4]	27.6 [8.1]	26.6 [7.8]	30.2 [8.9]	29.2 [8.5]	28.1 [8.2]	32.4 [9.5]	31.2 [9.1]	30.1 [8.8]
		Sens BTUH [kW]	-4.7 [-1.4]	-4.3 [-1.3]	-3.9 [-1.2]	-5.6 [-1.6]	-5.1 [-1.5]	-4.7 [-1.4]	-6.5 [-1.9]	-5.9 [-1.7]	-5.4 [-1.6]
		Power	5.1	5.1	5	5	4.9	4.8	4.8	4.7	4.6
	120ºF [48.9ºC]	Total BTUH [kW]	19.5 [5.7]	18.9 [5.5]	18.2 [5.3]	21.2 [6.2]	20.5 [6]	19.7 [5.8]	23.3 [6.8]	22.5 [6.6]	21.7 [6.4]
		Sens BTUH [kW]	-7.9 [-2.3]	-7.2 [-2.1]	-6.5 [-1.9]	-8.7 [-2.6]	-8 [-2.3]	-7.2 [-2.1]	-9.6 [-2.8]	-8.8 [-2.6]	-7.9 [-2.3]
		Power	5.8	5.7	5.6	5.7	5.6	5.5	5.5	5.4	5.3

Appendix E – Heater Kit Characteristics

208/230V, THREE PHASE, 60 Hz, AUXILARY ELECTRIC HEATER KIT CHARACTERISTICS AND APPLICATION									
	Single Power Supply for Both Unit and Heater Kit					Separate Power Supply for Both Unit and Heater Kit			
	Heater Kit			Air Conditioner		Heater Kit		Air Conditioner	
UNIT MODEL NUMBER	MODEL NO. RXJJ-	Rated Heater KW @ 208/230	FLA	UNIT MIN. CKT. AMPACITY	MAX FUSE OR CKT. BKR. SIZE (CKT. BKR. MUST BE HACR TYPE FOR USA)	MIN. CKT. AMPACITY	MAX FUSE OR CKT. BKR. SIZE (CKT. BKR. MUST BE HACR TYPE FOR USA)	MIN. CKT. AMPACITY	MAX FUSE OR CKT. BKR. SIZE (CKT. BKR. MUST BE HACR TYPE FOR USA)
(-)ACCZR036ACT	NONE	-	-	19/19	25/25	-	-	19/19	25/25
	DC10CP	7.5/10	20.9/24.1	34/38	35/40	27/31	30/35	19/19	25/25
	DC15CP	11.3/15	31.4/36.2	47/53	50/60	40/46	40/50	19/19	25/25
	DC20CP	15/20	41.7/48.1	60/68	60/70	53/61	60/70	19/19	25/25
(-)ACCZR036ACU	NONE	-	-	25/25	35/35	-	-	25/25	35/35
	DC10CP	7.5/10	20.9/24.1	41/45	45/45	27/31	30/35	25/25	35/35
	DC15CP	11.3/15	31.4/36.2	54/60	60/60	40/46	40/50	25/25	35/35
	DC20CP	15/20	41.7/48.1	67/75	70/80	53/61	60/70	25/25	35/35
(-)ACCZR048ACT	NONE	-	-	25/25	35/35	-	-	25/25	35/35
	DC10CP	7.5/10	20.9/24.1	34/38	35/40	27/31	30/35	25/25	35/35
	DC15CP	11.3/15	31.4/36.2	47/53	50/60	40/46	40/50	25/25	35/35
	DC20CP	15/20	41.7/48.1	60/68	60/70	53/61	60/70	25/25	35/35
(-)ACCZR048ACU	NONE	-	-	31/31	40/40	-	-	31/31	40/40
	DC10CP	7.5/10	20.9/24.1	41/45	45/45	27/31	30/35	31/31	40/40
	DC15CP	11.3/15	31.4/36.2	54/60	60/60	40/46	40/50	31/31	40/40
	DC20CP	15/20	41.7/48.1	67/75	70/80	53/61	60/70	31/31	40/40
(-)ACCZR060ACT	NONE	-	-	34/34	45/45	-	-	34/34	45/45
	DC10CP	7.5/10	20.9/24.1	41/45	45/45	27/31	30/35	34/34	45/45
	DC15CP	11.3/15	31.4/36.2	54/60	60/60	40/46	40/50	34/34	45/45
	DC20CP	15/20	41.7/48.1	67/75	70/80	53/61	60/70	34/34	45/45
(-)ACCZR060ACU	NONE	-	-	34/34	45/45	-	-	34/34	45/45
	DC10CP	7.5/10	20.9/24.1	41/45	45/45	27/31	30/35	34/34	45/45
	DC15CP	11.3/15	31.4/36.2	54/60	60/60	40/46	40/50	34/34	45/45
	DC20CP	15/20	41.7/48.1	67/75	70/80	53/61	60/70	34/34	45/45

P. APPENDICES

Appendix E – Heater Kit Characteristics

208/230V, SINGLE PHASE, 60 Hz, AUXILARY ELECTRIC HEATER KIT CHARACTERISTICS AND APPLICATION									
Single Power Supply for Both Unit and Heater Kit						Separate Power Supply for Both Unit and Heater Kit			
UNIT MODEL NUMBER	Heater Kit			Air Conditioner		Heater Kit		Air Conditioner	
	MODEL NO. RXJJ-	Rated Heater KW @ 208/230	FLA	UNIT MIN. CKT. AMPACITY	MAX FUSE OR CKT. BKR. SIZE (CKT. BKR. MUST BE HACR TYPE FOR USA)	MIN. CKT. AMPACITY	MAX FUSE OR CKT. BKR. SIZE (CKT. BKR. MUST BE HACR TYPE FOR USA)	MIN. CKT. AMPACITY	MAX FUSE OR CKT. BKR. SIZE (CKT. BKR. MUST BE HACR TYPE FOR USA)
(-)ACCZR036AJT	NONE	-	-	25/25	35/35	-	-	25/25	35/35
	DC10JT	7.5/10	36.2/41.7	53/60	60/60	46/53	50/60	25/25	35/35
	DC15JT	11.3/15	54.3/62.7	76/86	80/90	68/79	70/80	25/25	35/35
	DC20JT	15/20	72.2/83.3	98/112	100/125	91/105	100/110	25/25	35/35
(-)ACCZR036AJU	NONE	-	-	31/31	40/40	-	-	31/31	40/40
	DC10JT	7.5/10	36.2/41.7	60/67	60/70	46/53	50/60	31/31	40/40
	DC15JT	11.3/15	54.3/62.7	83/93	90/100	68/79	70/80	31/31	40/40
	DC20JT	15/20	72.2/83.3	105/119	110/125	91/105	100/110	31/31	40/40
(-)ACCZR048AJT	NONE	-	-	34/34	50/50	-	-	34/34	50/50
	DC10JT	7.5/10	36.2/41.7	53/60	60/60	46/53	50/60	34/34	50/50
	DC15JT	11.3/15	54.3/62.7	76/86	80/90	68/79	70/80	34/34	50/50
	DC20JT	15/20	72.2/83.3	98/112	100/125	91/105	100/110	34/34	50/50
(-)ACCZR048AJU	NONE	-	-	40/40	50/50	-	-	40/40	50/50
	DC10JT	7.5/10	36.2/41.7	60/67	60/70	46/53	50/60	40/40	50/50
	DC15JT	11.3/15	54.3/62.7	83/93	90/100	68/79	70/80	40/40	50/50
	DC20JT	15/20	72.2/83.3	105/119	110/125	91/105	100/110	40/40	50/50
(-)ACCZR060AJT	NONE	-	-	46/46	70/70	-	-	46/46	70/70
	DC10JT	7.5/10	36.2/41.7	60/67	70/70	46/53	50/60	46/46	70/70
	DC15JT	11.3/15	54.3/62.7	83/93	90/100	68/79	70/80	46/46	70/70
	DC20JT	15/20	72.2/83.3	105/119	110/125	91/105	100/110	46/46	70/70
(-)ACCZR060AJU	NONE	-	-	46/46	70/70	-	-	46/46	70/70
	DC10JT	7.5/10	36.2/41.7	60/67	70/70	46/53	50/60	46/46	70/70
	DC15JT	11.3/15	54.3/62.7	83/93	90/100	68/79	70/80	46/46	70/70
	DC20JT	15/20	72.2/83.3	105/119	110/125	91/105	100/110	46/46	70/70

Appendix E – Heater Kit Characteristics

460V, THREE PHASE, 60 Hz, AUXILARY ELECTRIC HEATER KIT CHARACTERISTICS AND APPLICATION									
Single Power Supply for Both Unit and Heater Kit						Separate Power Supply for Both Unit and Heater Kit			
UNIT MODEL NUMBER	Heater Kit			Air Conditioner		Heater Kit		Air Conditioner	
	MODEL NO. RXJJ-	Rated Heater KW @ 208/230	FLA	UNIT MIN. CKT. AMPACITY	MAX FUSE OR CKT. BKR. SIZE (CKT. BKR. MUST BE HACR TYPE FOR USA)	MIN. CKT. AMPACITY	MAX FUSE OR CKT. BKR. SIZE (CKT. BKR. MUST BE HACR TYPE FOR USA)	MIN. CKT. AMPACITY	MAX FUSE OR CKT. BKR. SIZE (CKT. BKR. MUST BE HACR TYPE FOR USA)
(-)ACCZR036ADT	NONE	-	-	11	15	-	-	11	15
	DC10DNV	10	12	19	20	15	15	11	15
	DC15DNV	15	18.1	27	30	23	25	11	15
	DC20DNV	20	24.1	35	35	31	35	11	15
(-)ACCZR036ADU	NONE	-	-	10	15	-	-	10	15
	DC10DNV	10	12	18	20	15	15	10	15
	DC15DNV	15	18.1	26	30	23	25	10	15
	DC20DNV	20	24.1	33	35	31	35	10	15
(-)ACCZR048ADT	NONE	-	-	13	15	-	-	13	15
	DC10DNV	10	12	19	20	15	15	13	15
	DC15DNV	15	18.1	27	30	23	25	13	15
	DC20DNV	20	24.1	35	35	31	35	13	15
(-)ACCZR048ADU	NONE	-	-	12	15	-	-	12	15
	DC10DNV	10	12	18	20	15	15	12	15
	DC15DNV	15	18.1	26	30	23	25	12	15
	DC20DNV	20	24.1	33	35	31	35	12	15
(-)ACCZR060ADT	NONE	-	-	15	20	-	-	15	20
	DC10DNV	10	12	20	20	15	15	15	20
	DC15DNV	15	18.1	28	30	23	25	15	20
	DC20DNV	20	24.1	36	40	31	35	15	20
(-)ACCZR060ADU	NONE	-	-	15	20	-	-	15	20
	DC10DNV	10	12	20	20	15	15	15	20
	DC15DNV	15	18.1	28	30	23	25	15	20
	DC20DNV	20	24.1	36	40	31	35	15	20

P. APPENDICES

Appendix E – Heater Kit Characteristics

460V, THREE PHASE, 60 Hz, AUXILARY ELECTRIC HEATER KIT CHARACTERISTICS AND APPLICATION									
Single Power Supply for Both Unit and Heater Kit						Separate Power Supply for Both Unit and Heater Kit			
UNIT MODEL NUMBER	Heater Kit			Air Conditioner		Heater Kit		Air Conditioner	
	MODEL NO. RXJJ-	Rated Heater KW @ 208/230	FLA	UNIT MIN. CKT. AMPACITY	MAX FUSE OR CKT. BKR. SIZE (CKT. BKR. MUST BE HACR TYPE FOR USA)	MIN. CKT. AMPACITY	MAX FUSE OR CKT. BKR. SIZE (CKT. BKR. MUST BE HACR TYPE FOR USA)	MIN. CKT. AMPACITY	MAX FUSE OR CKT. BKR. SIZE (CKT. BKR. MUST BE HACR TYPE FOR USA)
(-)ACCZT072ADT	-NONE-	-	-	17	25	-	-	17	25
	DC15DNV	15.0	18.1	28	30	23	25	17	25
	DC20DNV	20.0	24.1	35	35	31	35	17	25
	DC24DNV	24.0	28.9	41	45	37	40	17	25
(-)ACCZT072ADU	-NONE-	-	-	17	25	-	-	17	25
	DC15DNV	15.0	18.1	28	30	23	25	17	25
	DC20DNV	20.0	24.1	35	35	31	35	17	25
	DC24DNV	24.0	28.9	41	45	37	40	17	25

208/230V, THREE PHASE, 60 Hz, AUXILARY ELECTRIC HEATER KIT CHARACTERISTICS AND APPLICATION									
Single Power Supply for Both Unit and Heater Kit						Separate Power Supply for Both Unit and Heater Kit			
UNIT MODEL NUMBER	Heater Kit			Air Conditioner		Heater Kit		Air Conditioner	
	MODEL NO. RXJJ-	Rated Heater KW @ 208/230	FLA	UNIT MIN. CKT. AMPACITY	MAX FUSE OR CKT. BKR. SIZE (CKT. BKR. MUST BE HACR TYPE FOR USA)	MIN. CKT. AMPACITY	MAX FUSE OR CKT. BKR. SIZE (CKT. BKR. MUST BE HACR TYPE FOR USA)	MIN. CKT. AMPACITY	MAX FUSE OR CKT. BKR. SIZE (CKT. BKR. MUST BE HACR TYPE FOR USA)
(-)ACCZT072ACT	-NONE-	-	-	33/33	50/50	-	-	33/33	50/50
	DC15CP	11.3/15.0	31.4/36.2	48/54	50/60	40/46	40/50	33/33	50/50
	DC20CP	15.0/20.0	41.7/48.1	61/69	70/70	53/61	60/70	33/33	50/50
	DC24CP	18.0/24.0	50.0/57.7	71/81	80/90	63/73	70/80	33/33	50/50
(-)ACCZT072ACU	-NONE-	-	-	33/33	50/50	-	-	33/33	50/50
	DC15CP	11.3/15.1	31.4/36.3	48/54	50/60	40/46	40/50	33/33	50/50
	DC20CP	15.0/20.0	41.7/48.1	61/69	70/70	53/61	60/70	33/33	50/50
	DC24CP	18.0/24.0	50.0/57.7	71/81	80/90	63/73	70/80	33/33	50/50

Appendix E – Heater Kit Characteristics

6T w/ HUMIDIDRY 208/230V, THREE PHASE, 60 Hz, AUXILARY ELECTRIC HEATER KIT CHARACTERISTICS AND APPLICATION									
	Single Power Supply for Both Unit and Heater Kit					Separate Power Supply for Both Unit and Heater Kit			
	Heater Kit			Air Conditioner		Heater Kit		Air Conditioner	
UNIT MODEL NUMBER	MODEL NO. RXJJ-	Rated Heater KW @ 208/230	FLA	UNIT MIN. CKT. AMPACITY	MAX FUSE OR CKT. BKR. SIZE (CKT. BKR. MUST BE HACR TYPE FOR USA)	MIN. CKT. AMPACITY	MAX FUSE OR CKT. BKR. SIZE (CKT. BKR. MUST BE HACR TYPE FOR USA)	MIN. CKT. AMPACITY	MAX FUSE OR CKT. BKR. SIZE (CKT. BKR. MUST BE HACR TYPE FOR USA)
(-)ACCZT072ACT w/ HumidiDry	NONE	-	-	34/34	50/50	-	-	34/34	50/50
	DC15CP	11.3/15	31.4/36.2	74/80	80/90	40/46	40/50	34/34	50/50
	DC20CP	15/20	41.7/48.1	87/95	90/100	53/61	60/70	34/34	50/50
	DC24CP	8/24	50/57.7	97/107	100/110	63/73	70/80	34/34	50/50
(-)ACCZT072ACU w/ HumidiDry	NONE	-	-	34/34	50/50	-	-	34/34	50/50
	DC15CP	11.3/15	31.4/36.2	74/80	80/90	40/46	40/50	34/34	50/50
	DC20CP	15/20	41.7/48.1	87/95	90/100	53/61	60/70	34/34	50/50
	DC24CP	8/24	50/57.7	97/107	100/110	63/73	70/80	34/34	50/50

"6T w/ HUMIDIDRY 460V, THREE PHASE, 60 Hz, AUXILARY ELECTRIC HEATER KIT CHARACTERISTICS AND APPLICATION"									
	Single Power Supply for Both Unit and Heater Kit					Separate Power Supply for Both Unit and Heater Kit			
	Heater Kit			Air Conditioner		Heater Kit		Air Conditioner	
UNIT MODEL NUMBER	MODEL NO. RXJJ-	Rated Heater KW @ 208/230	FLA	UNIT MIN. CKT. AMPACITY	MAX FUSE OR CKT. BKR. SIZE (CKT. BKR. MUST BE HACR TYPE FOR USA)	MIN. CKT. AMPACITY	MAX FUSE OR CKT. BKR. SIZE (CKT. BKR. MUST BE HACR TYPE FOR USA)	MIN. CKT. AMPACITY	MAX FUSE OR CKT. BKR. SIZE (CKT. BKR. MUST BE HACR TYPE FOR USA)
(-)ACCZT072ADT w/ HumidiDry	NONE	-	-	17	25	-	-	17	25
	DC15DNV	15	18.1	40	45	23	25	17	25
	DC20DNV	20	24.1	47	50	31	35	17	25
	DC24DNV	24	28.9	53	60	37	40	17	25
(-)ACCZT072ADU w/ HumidiDry	NONE	-	-	17	25	-	-	17	25
	DC15DNV	15	18.1	40	45	23	25	17	25
	DC20DNV	20	24.1	47	50	31	35	17	25
	DC24DNV	24	28.9	53	60	37	40	17	25

Appendix F – Refrigerant Charging Charts

3.0 Ton AC Charging Chart

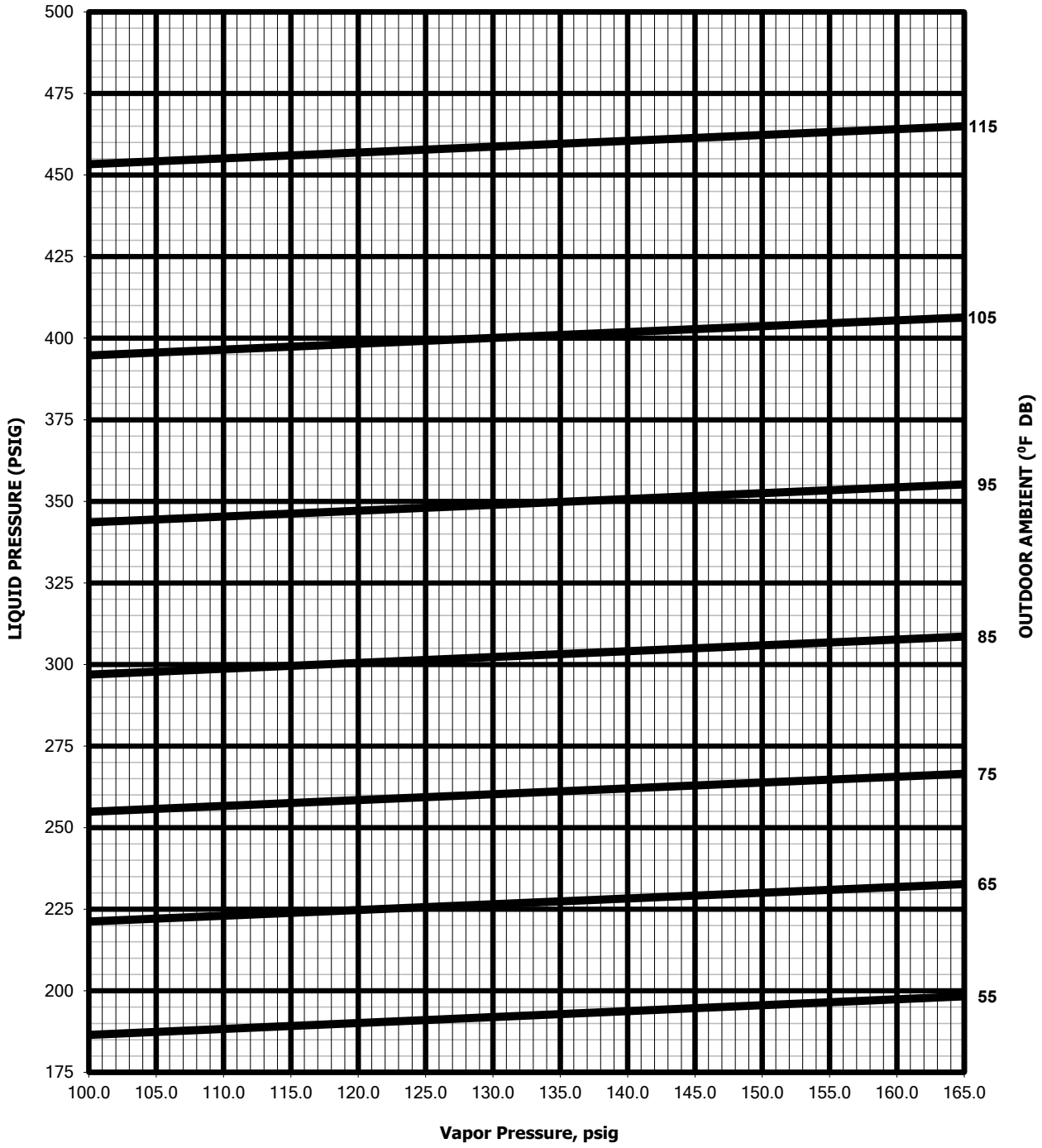

CAUTION: 1. RETURN AIR TEMPERATURE MUST BE WITHIN COMFORT CONDITIONS BEFORE FINAL REFRIGERANT CHECK!

INSTRUCTIONS:
1. MEASURE PRESSURE AT COMPRESSOR SUCTION AND LIQUID.
2. MEASURE OUTDOOR AMBIENT TO UNIT.
3. PLACE X ON CHART WHERE SUCTION AND LIQUID INTERSECT.
4. IF X IS BELOW OUTDOOR AMBIENT LINE, ADD CHARGE AND REPEAT STEPS 1-3.
5. IF X IS ABOVE OUTDOOR AMBIENT LINE, RECOVER EXCESS CHARGE AND REPEAT STEPS 1-3.

92-106696-02-00

Appendix F – Refrigerant Charging Charts

3.0-Ton HumidiDry Charging Chart (60 Hz)

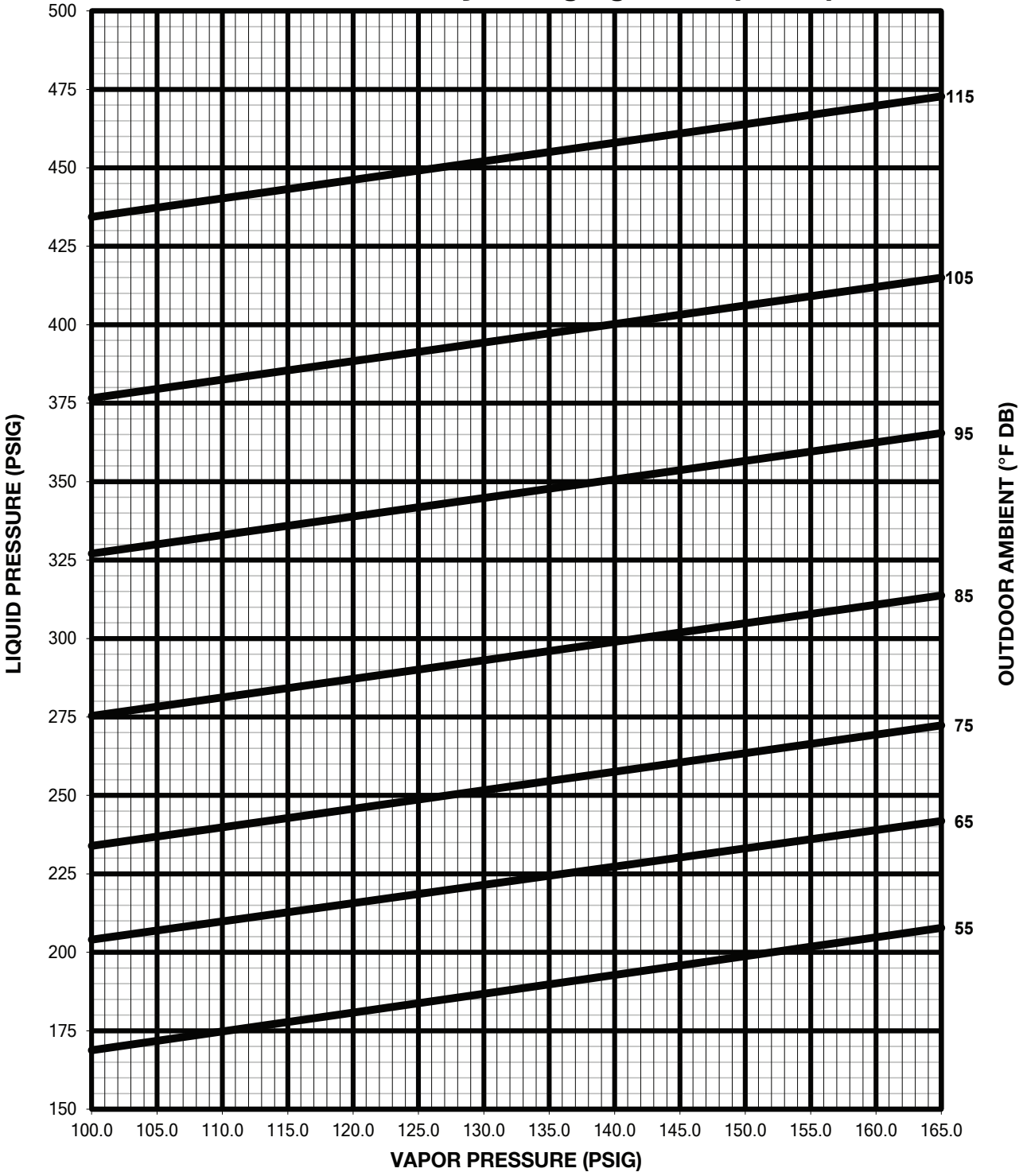

CAUTION INSTRUCTIONS:

1. RETURN AIR TEMPERATURE MUST BE WITHIN COMFORT CONDITIONS BEFORE FINAL REFRIGERANT CHECK!
1. MEASURE PRESSURE AT COMPRESSOR SUCTION AND L IOUID.
2.MEASURE OUTDOOR AMBIENT TO UNIT.
3.PLACE X ON CHART WHERE SUCTION AND LIOUID INTERSECT.
4.IF X IS BELOW OUTDOOR AMBIENT LINE, ADD CHARGE AND REPEAT STEPS 1-3.
5.IF X IS ABOVE OUTDOOR AMBIENT LINE, RECOVER EXCESS CHARGE AND REPEAT STEPS 1-3.

92-106140-04-00

Appendix F – Refrigerant Charging Charts (Cont.)

4.0 Ton GE Charging Chart

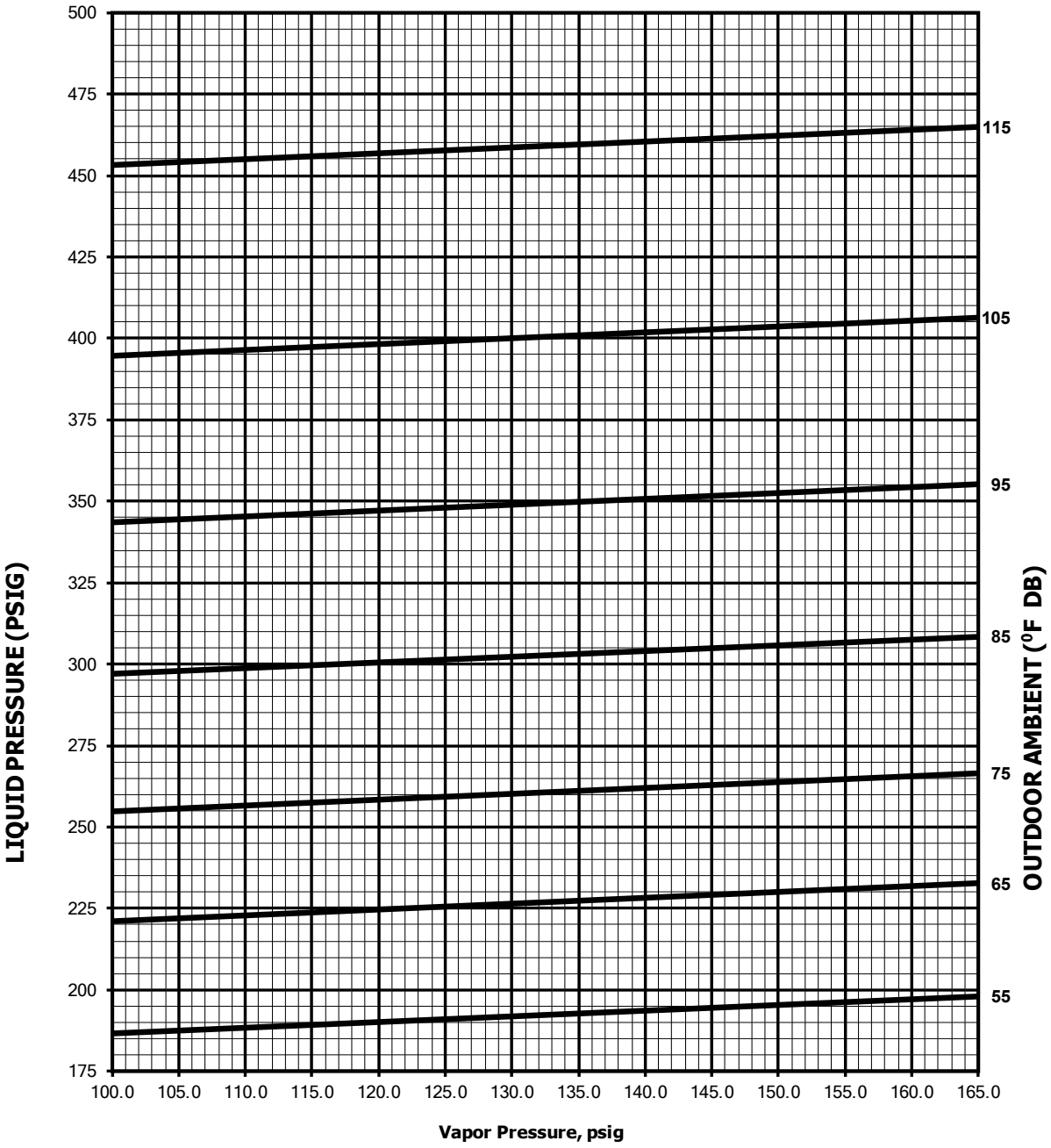

CAUTION: 1. RETURN AIR TEMPERATURE MUST BE WITHIN COMFORT CONDITIONS BEFORE FINAL REFRIGERANT CHECK!

INSTRUCTIONS:
1. MEASURE PRESSURE AT COMPRESSOR SUCTION AND L IOUID.
2. MEASURE OUTDOOR AMBIENT TO UNIT.
3. PLACE X ON CHART WHERE SUCTION AND LIOUID INTERSECT.
4. IF X IS BELOW OUTDOOR AMBIENT LINE, ADD CHARGE AND REPEAT STEPS 1-3.
5. IF X IS ABOVE OUTDOOR AMBIENT LINE, RECOVER EXCESS CHARGE AND REPEAT STEPS 1-3.

92-106696-01-01

Appendix F – Refrigerant Charging Charts (Cont.)

4.0 Ton HumidiDry Charging Chart (60 Hz)

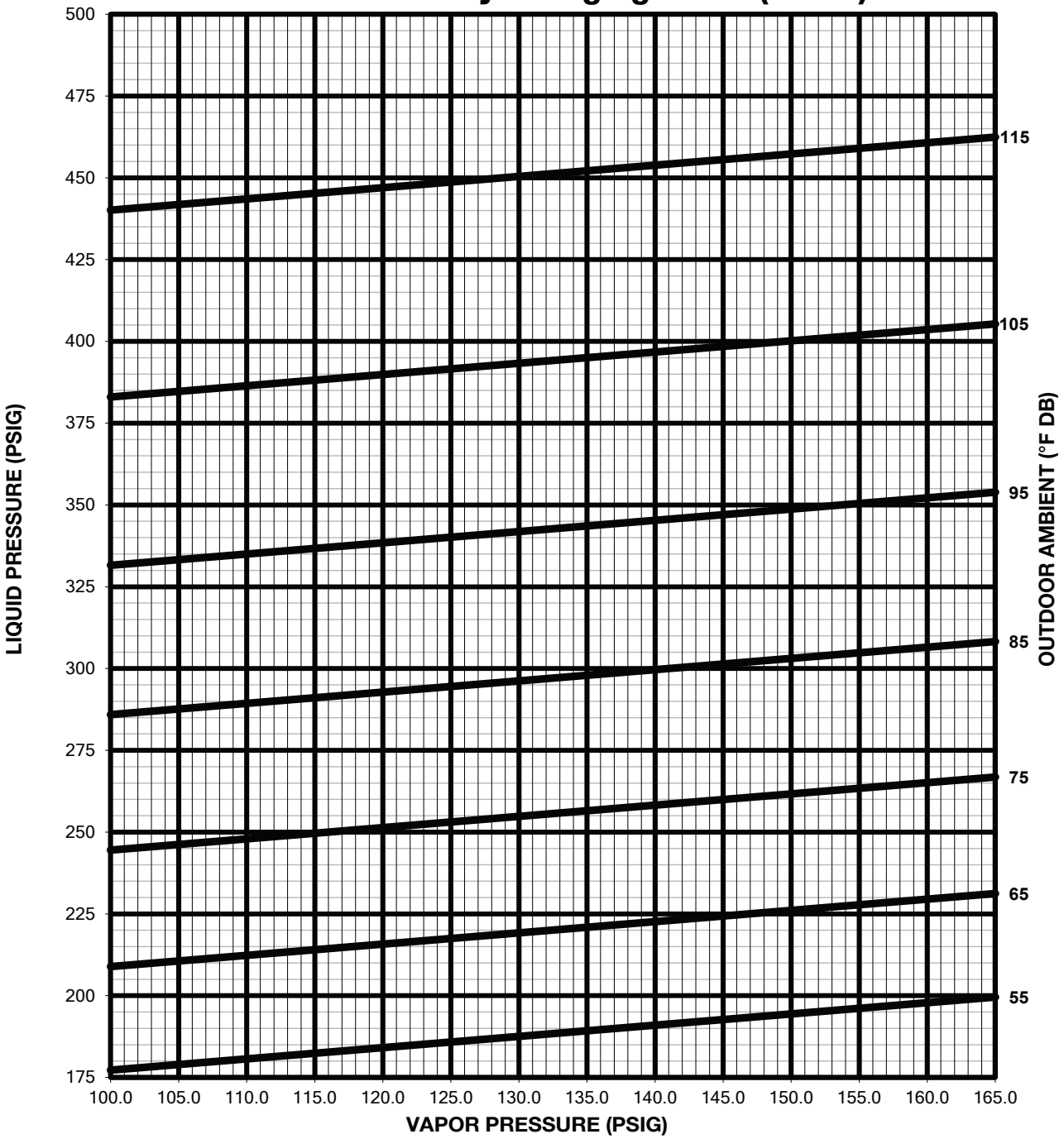

CAUTION INSTRUCTIONS:

1. RETURN AIR TEMPERATURE MUST BE WITHIN COMFORT CONDITIONS BEFORE FINAL REFRIGERANT CHECK!
1. MEASURE PRESSURE AT COMPRESSOR SUCTION AND L IOUID.
2. MEASURE OUTDOOR AMBIENT TO UNIT.
3. PLACE X ON CHART WHERE SUCTION AND LIOUID INTERSECT.
4. IF X IS BELOW OUTDOOR AMBIENT LINE, ADD CHARGE AND REPEAT STEPS 1-3.
5. IF X IS ABOVE OUTDOOR AMBIENT LINE, RECOVER EXCESS CHARGE AND REPEAT STEPS 1-3.

92-106140-05-00

Appendix F – Refrigerant Charging Charts (Cont.)

5.0 Ton GE Charging Chart

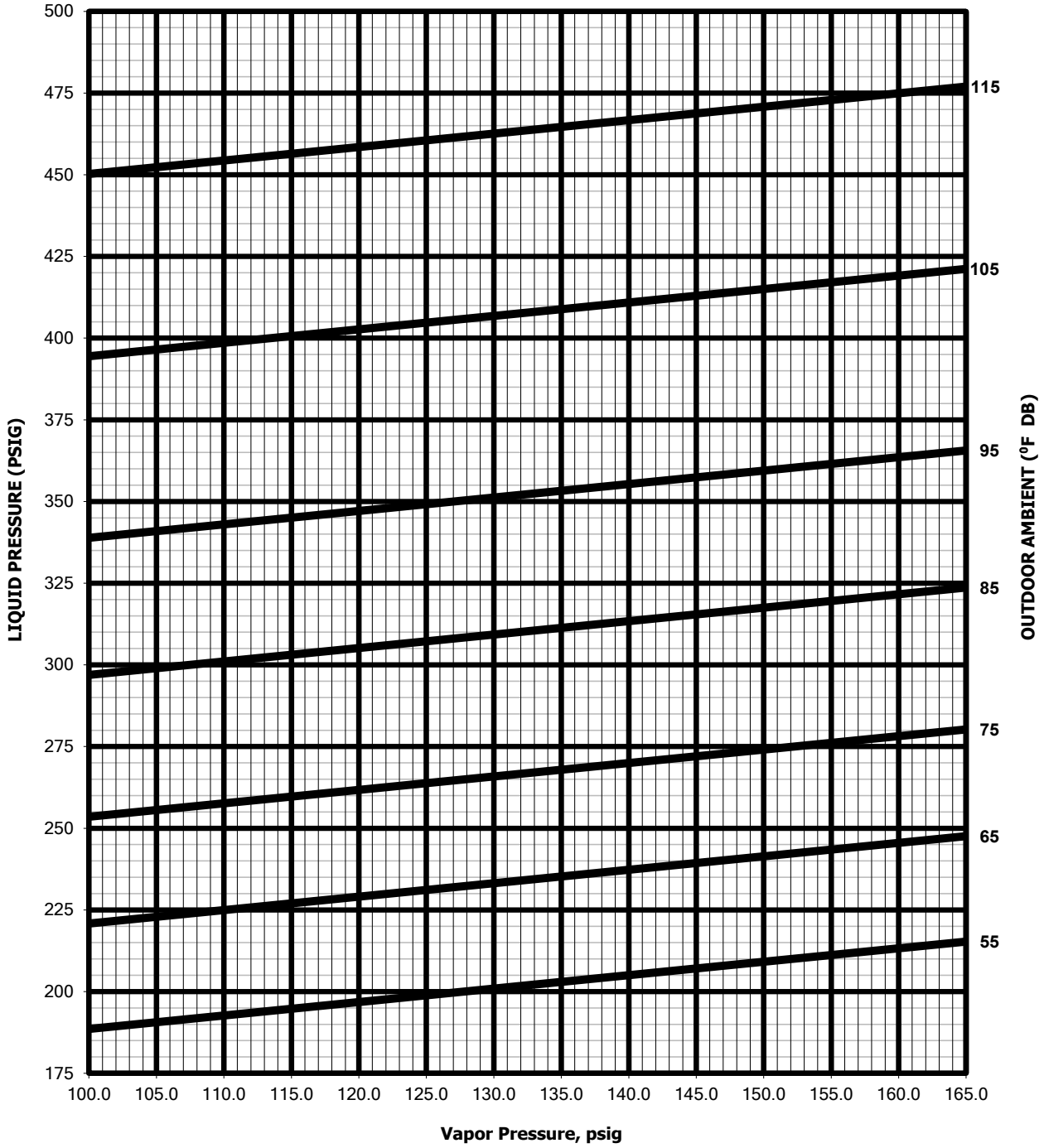

CAUTION: 1. RETURN AIR TEMPERATURE MUST BE WITHIN COMFORT CONDITIONS BEFORE FINAL REFRIGERANT CHECK!

INSTRUCTIONS:
1. MEASURE PRESSURE AT COMPRESSOR SUCTION AND LIQUID.
2. MEASURE OUTDOOR AMBIENT TO UNIT.
3. PLACE X ON CHART WHERE SUCTION AND LIQUID INTERSECT.
4. IF X IS BELOW OUTDOOR AMBIENT LINE, ADD CHARGE AND REPEAT STEPS 1-3.
5. IF X IS ABOVE OUTDOOR AMBIENT LINE, RECOVER EXCESS CHARGE AND REPEAT STEPS 1-3.

92-106696-03-00

Appendix F – Refrigerant Charging Charts (Cont.)

5.0 Ton HumidiDry Charging Chart (60 Hz)

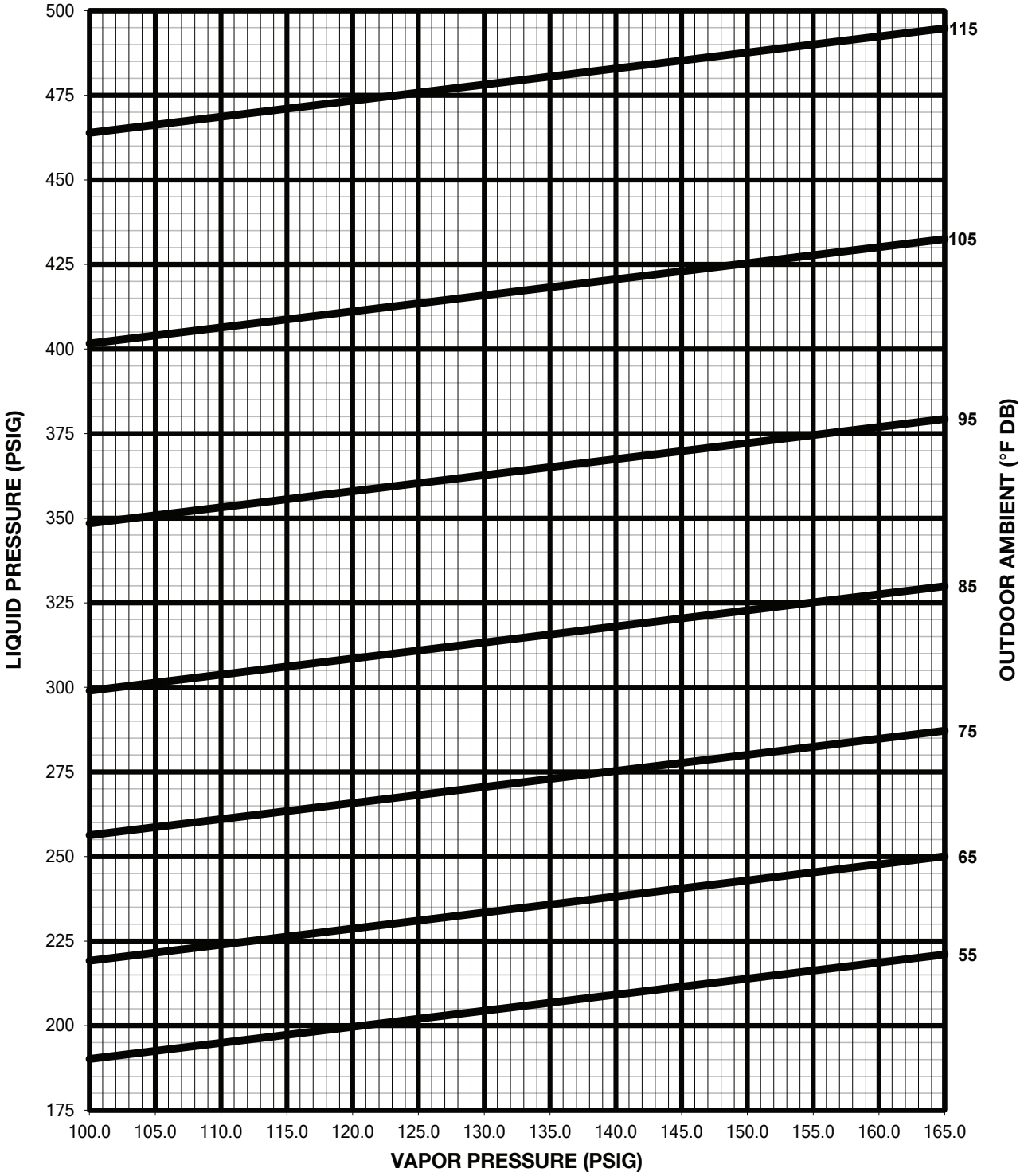

CAUTION INSTRUCTIONS:

1. RETURN AIR TEMPERATURE MUST BE WITHIN COMFORT CONDITIONS BEFORE FINAL REFRIGERANT CHECK!
1. MEASURE PRESSURE AT COMPRESSOR SUCTION AND L IOUID.
2. MEASURE OUTDOOR AMBIENT TO UNIT.
3. PLACE X ON CHART WHERE SUCTION AND LIOUID INTERSECT.
4. IF X IS BELOW OUTDOOR AMBIENT LINE, ADD CHARGE AND REPEAT STEPS 1-3.
5. IF X IS ABOVE OUTDOOR AMBIENT LINE, RECOVER EXCESS CHARGE AND REPEAT STEPS 1-3.

92-106140-06-00

Appendix F – Refrigerant Charging Charts (Cont.)

6.0-Ton Cooling Charging Chart

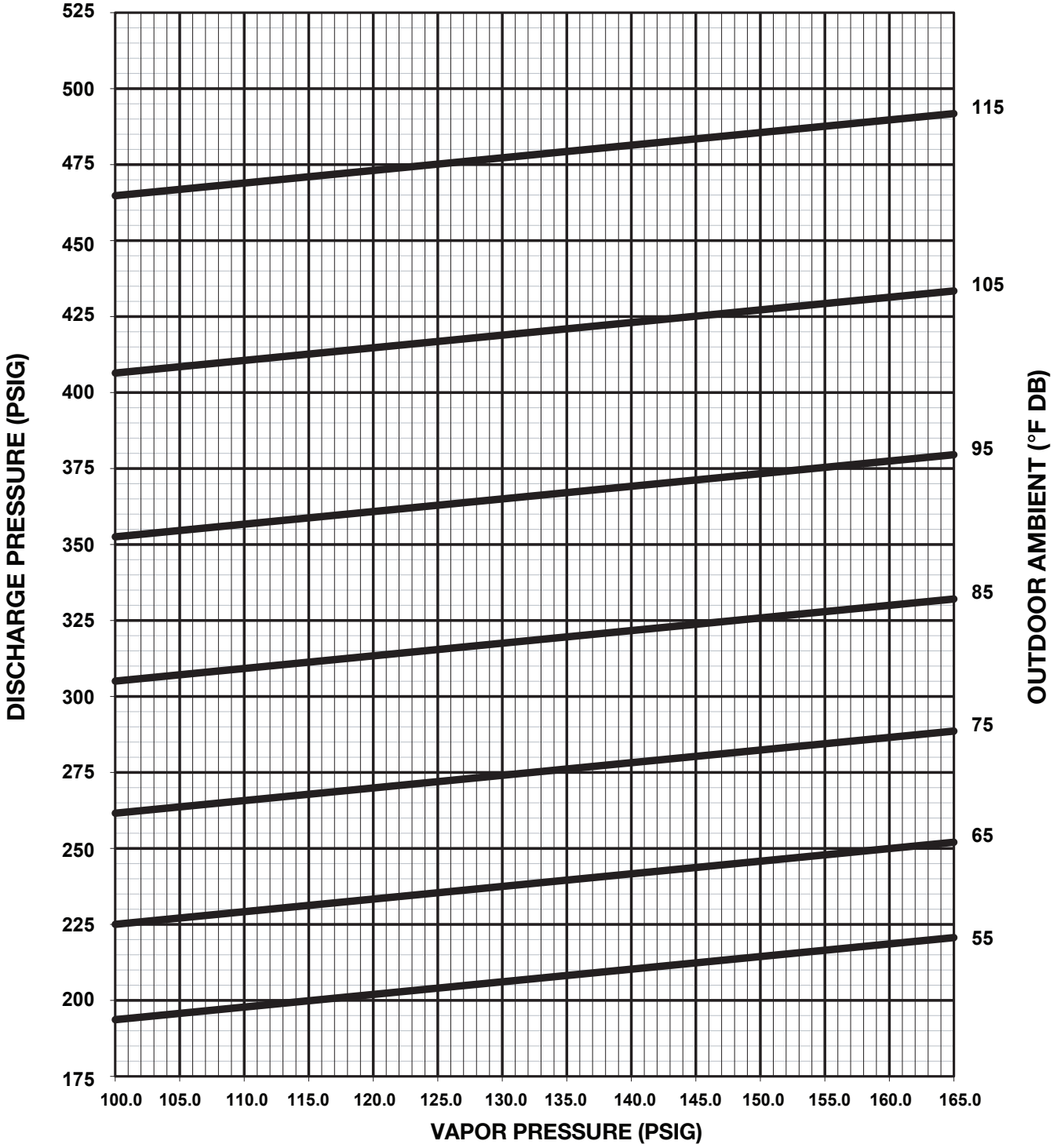

CAUTION 1. RETURN AIR TEMPERATURE MUST BE WITHIN COMFORT CONDITIONS BEFORE FINAL REFRIGERANT CHECK!

INSTRUCTIONS:
1. MEASURE PRESSURE AT COMPRESSOR SUCTION AND LIQUID.
2. MEASURE OUTDOOR AMBIENT TO UNIT.
3. PLACE X ON CHART WHERE SUCTION AND LIQUID INTERSECT.
4. IF X IS BELOW OUTDOOR AMBIENT LINE, ADD CHARGE AND REPEAT STEPS 1-3.
5. IF X IS ABOVE OUTDOOR AMBIENT LINE, RECOVER EXCESS CHARGE AND REPEAT STEPS 1-3.

92-106696-04-00

Appendix F – Refrigerant Charging Charts (Cont.)

6.0 Ton HumidiDry Charging Chart (60 Hz)

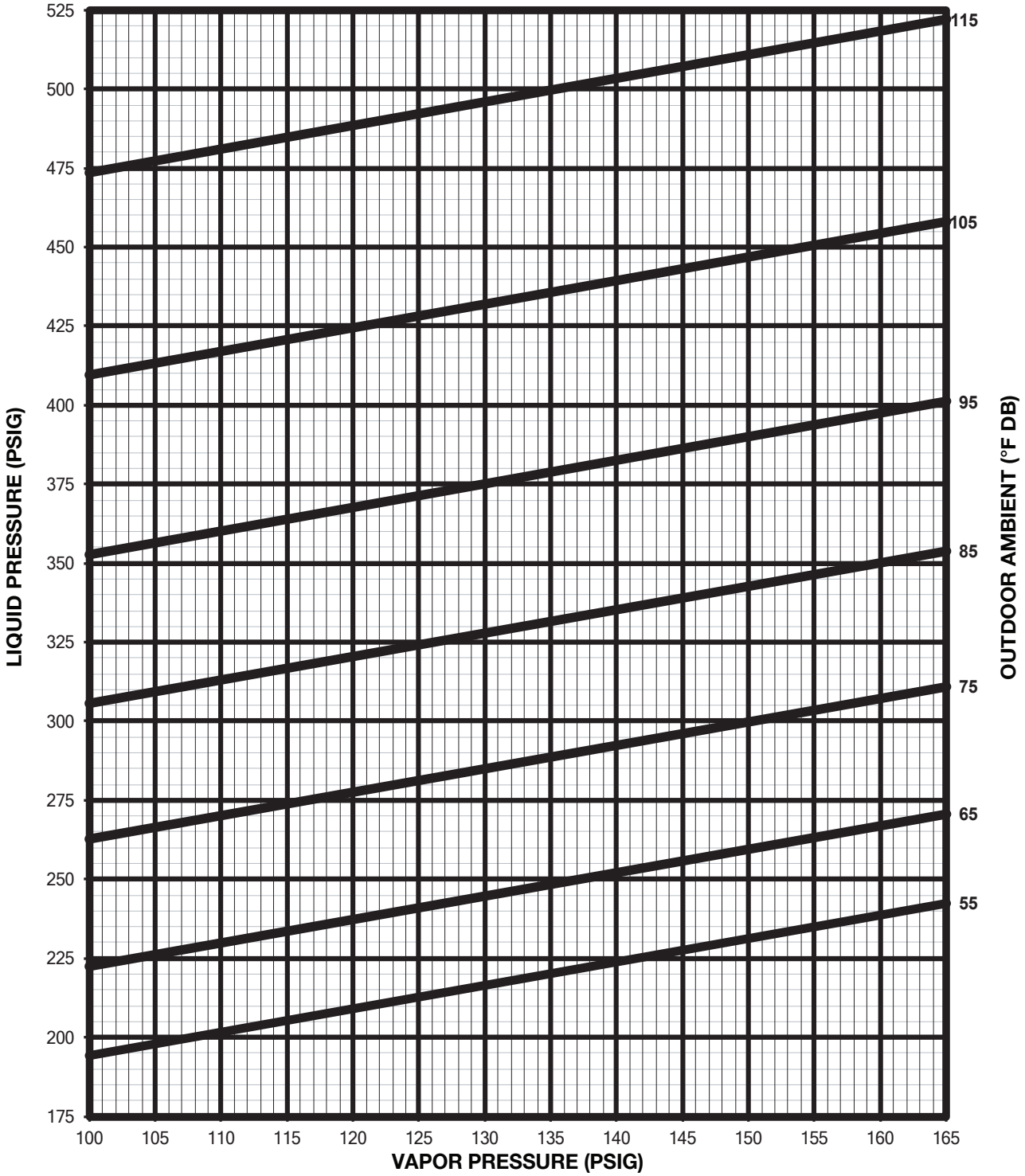

CAUTION INSTRUCTIONS:

1. RETURN AIR TEMPERATURE MUST BE WITHIN COMFORT CONDITIONS BEFORE FINAL REFRIGERANT CHECK!
1. MEASURE PRESSURE AT COMPRESSOR SUCTION AND L IOUID.
2. MEASURE OUTDOOR AMBIENT TO UNIT.
3. PLACE X ON CHART WHERE SUCTION AND LIOUID INTERSECT.
4. IF X IS BELOW OUTDOOR AMBIENT LINE, ADD CHARGE AND REPEAT STEPS 1-3.
5. IF X IS ABOVE OUTDOOR AMBIENT LINE, RECOVER EXCESS CHARGE AND REPEAT STEPS 1-3.

92-106140-07-00

Appendix F – Refrigerant Charging Charts (Cont.)

SYSTEM CHARGE CHART – REFRIGERANT 410 A

PRESSURE REQUIREMENTS – GROSS CHARGE CHECK (REFER CHARGE CHART)

OUTDOOR DRY BULB (°F)	3 -TON	4 -TON	5 -TON	6 -TON
	LIQUID /VAPOR PRESSURE (PSIG)			
115	464 / 156	470 / 153	478 / 150	484 / 147
105	408 / 154	411 / 151	422 / 148	425 / 145
95	358 / 152	361 / 149	366 / 146	371 / 145
85	312 / 150	313 / 148	324 / 143	322 / 140
75	272 / 148	271 / 146	279 / 140	277 / 138
65	238 / 147	237 / 145	245 / 138	239 / 134
55	205 / 145	204 / 142	213 / 133	205 / 126

SUB COOLING REQUIREMENTS – FINAL CHARGE VERIFICATION

OUTDOOR DRY BULB (°F)	3 -TON	4 -TON	5 -TON	6 -TON
	SUBCOOLING (°F)			
115	11	12	11	15
105	11	11	10	15
95	10	11	10	15
85	10	10	9	14
75	9	9	8	13
65	11	10	9	14
55	11	10	11	15

1. This is required to fine-tune unit charge.

2. The Indoor ambient temperature must be between 72 °F and 82 °F dry bulb at the indoor coil.

3. Confirm the indoor air supply is at the rated CFM listed in ***Appendix A.***

4. Allow the system to run long enough for temperatures and pressures to stabilize; at least fifteen minutes.

5. Measure liquid pressure and line temperature at the liquid line service port (refer to section J.4.2.1. for the liquid line temperature measurement location). BE SURE TO USE ZERO LOSS FITTINGS WHILE MEASURING PRESSURE; ANY LOSS OF CHARGE MAY IMPACT PERFORMANCE.

6. To find the saturation temperature at the measured pressure, subtract the measured liquid line temperature from the saturation pressure to get the sub-cooling.

7. Check if the Sub-Cooling is within +/- 2.0 °F tolerance.

8.If the sub-cooling values are significantly different (> 20 psig) from those listed on the table in ***Appendix F***, there may be an airflow or component issue. Refer to section M. Diagnostics for more information.

Appendix G. Wiring Diagrams & Schematics

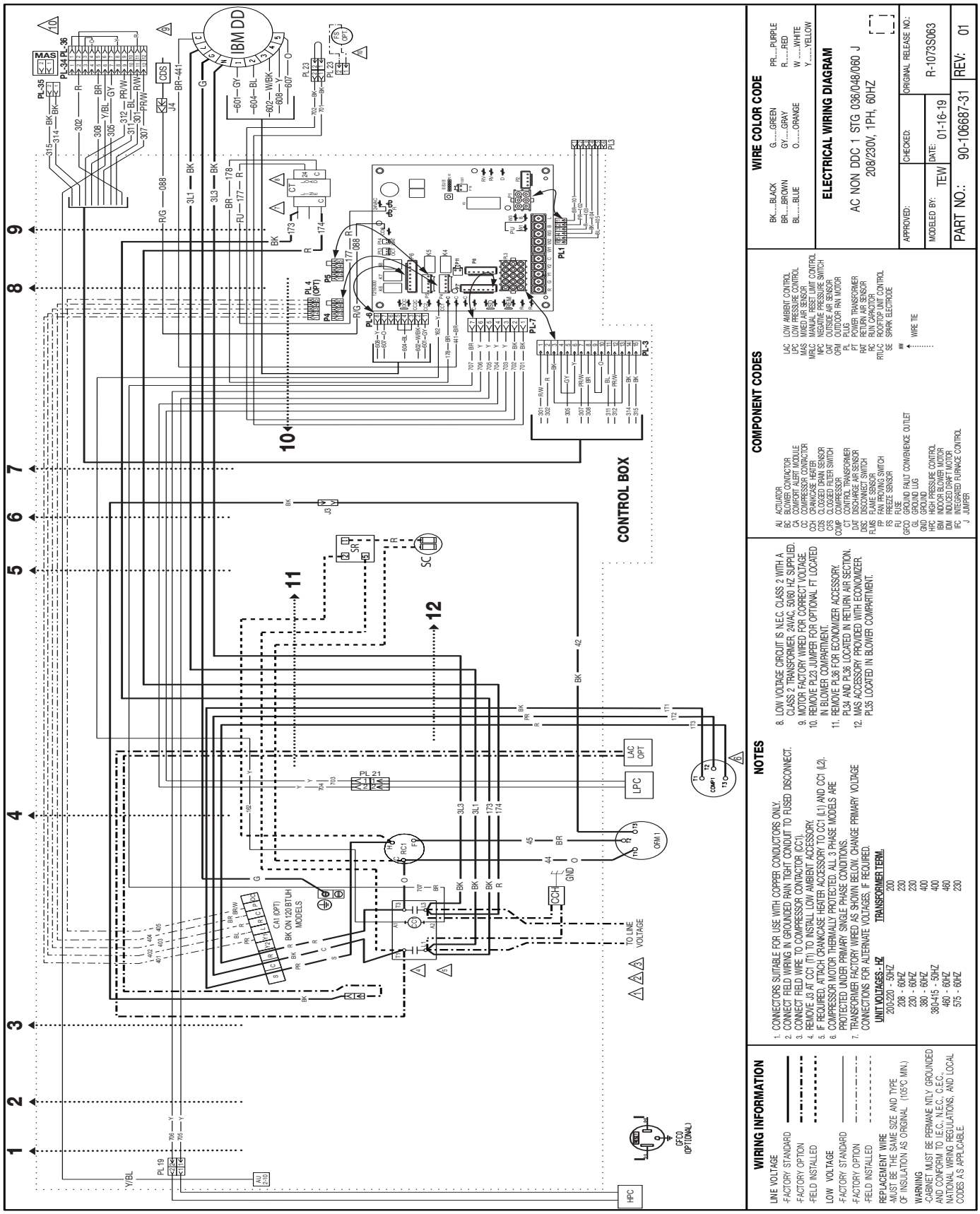

P. APPENDICES

Appendix G. Wiring Diagrams & Schematics (Cont.)

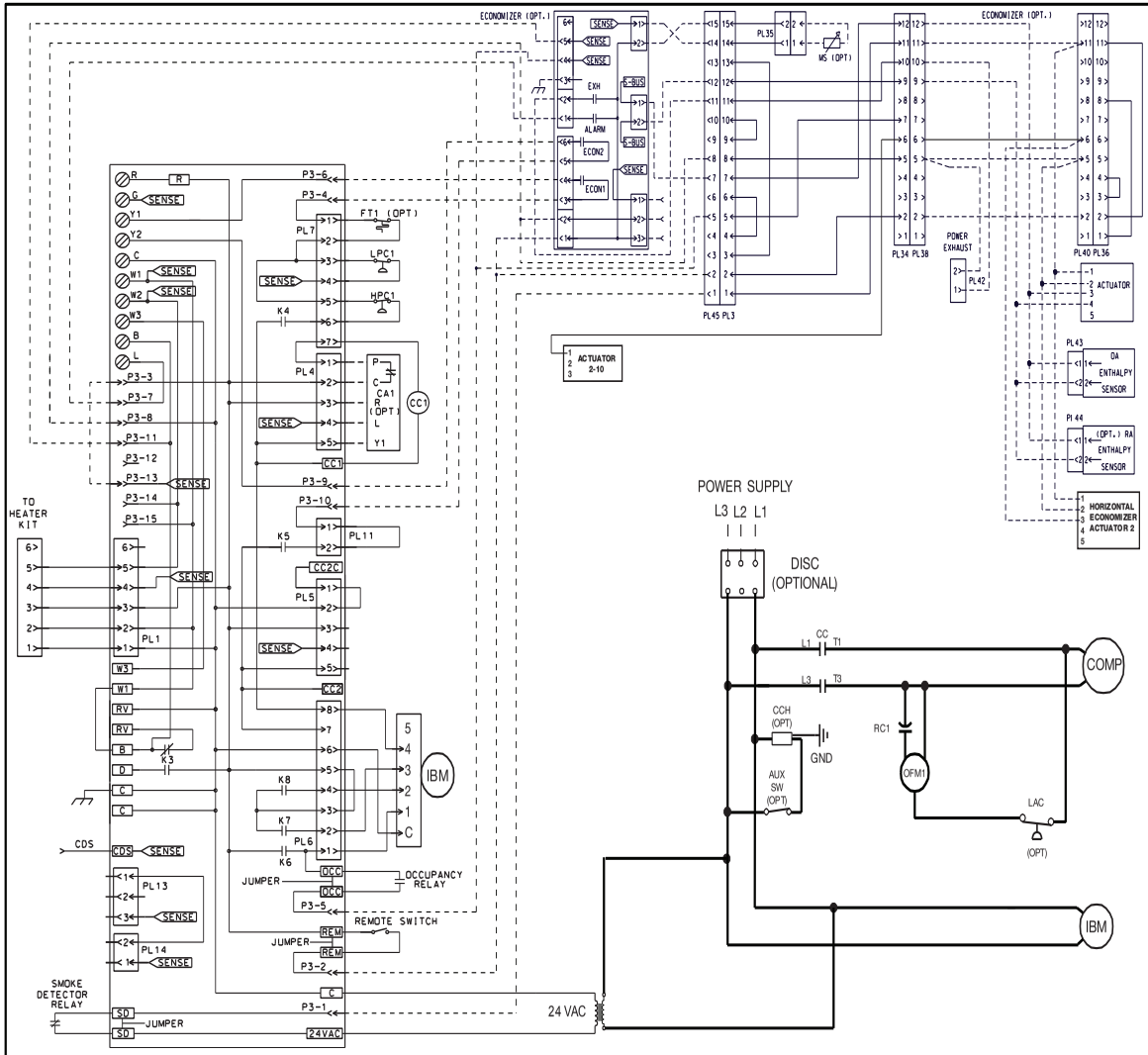

ALARM CODES

CODE	Description	FAULT LEVEL -0,1,2,3*
0	STANDBY	0
c	COMPRESSOR ON – Low (Flashing if in time delay)	0
C	COMPRESSOR ON – High (Flashing if in time delay)	0
E	Economizer Cooling – No Compressor	0
F	CONTINOUS FAN	0
h	HEAT ON – Low Stage	0
H	GAS HEAT ON – High Stage	0
4	Comfort Alert Code 4 for Compressor Circuit 1	3
5	Comfort Alert Code 5 for Compressor Circuit 1	3
6	Comfort Alert Code 6 for Compressor Circuit 1	3
7	Comfort Alert Code 7 for Compressor Circuit 1	3
8	Comfort Alert Code 8 for Compressor Circuit 1	3
9	Comfort Alert Code 9 for Compressor Circuit 1	3
10	One Hour Lockout	3
11	FAILED IGNITION	2
12	LO FLAME SENSE	1
13	FLAME LOST	2
14	UNEXPECTED FLAME	3
15	2nd Stage Gas valve improper voltage	2
20	REFRIGERANT LOW PRESSURE SWITCH OPEN – CIRCUIT 1	2
21	REFRIGERANT LOW PRESSURE SWITCH OPEN – CIRCUIT 2	2
22	MAIN LIMIT OPEN	2
29	REFRIGERANT HIGH PRESSURE SWITCH OPEN – CIRCUIT 1	2
30	REFRIGERANT HIGH PRESSURE SWITCH OPEN – CIRCUIT 2	2
33	MRLC (Rollout Limit) OPEN	2
34	Comfort Alert Code 4 for Compressor Circuit 2	3
35	Comfort Alert Code 5 for Compressor Circuit 2	3
36	Comfort Alert Code 6 for Compressor Circuit 2	3
37	Comfort Alert Code 7 for Compressor Circuit 2	3
38	Comfort Alert Code 8 for Compressor Circuit 2	3
39	Comfort Alert Code 9 for Compressor Circuit 2	3
42	Invalid Thermostat Selection	1
44	1st Stage COMBUSTION PRESS SWITCH CLOSED	2
46	1st Stage COMBUSTION PRESS SWITCH OPEN	2
49	FREEZE SWITCH OPEN – CIRCUIT 1	2
50	FREEZE SWITCH OPEN -CIRCUIT 2	2
55	2nd Stage COMBUSTION PRESS SWITCH CLOSED	2
57	2nd Stage COMBUSTION PRESS SWITCH OPEN	2,3
59	Condensate Drain Plugged	3
61	Blower Fault – NO RUN	3
83	Condenser Coil Temp Sensor Fail-OCT	2
84	Outdoor Air Temperature Sensor Fail-OAT	2
88	Emergency Stop Fault	3
93	CONTROL Fault	3
97	Smoke Detection	3

*Fault levels: 0= none, 1=warning, 2= problem, 3=shutdown

WIRING INFORMATION

LINE VOLTAGE
- FACTORY STANDARD
- FACTORY OPTION
- FIELD INSTALLED

LOW VOLTAGE
- FACTORY STANDARD
- FACTORY OPTION
- FIELD INSTALLED

REPLACEMENT WIRE
MUST BE THE SAME SIZE AND TYPE OF INSULATION AS ORIGINAL (105°C MIN.)

WARNING
CABINET MUST BE PERMANENTLY GROUNDED AND CONFORM TO I.E.C., N.E.C., C.E.C., NATIONAL WIRING REGULATIONS, AND LOCAL CODES AS APPLICABLE.

NOTES

1. CONNECTORS SUITABLE FOR USE WITH COPPER CONDUCTORS ONLY.
2. CONNECT FIELD WIRING IN GROUNDED RAIN TIGHT CONDUIT TO FUSED DISCONNECT.
3. CONNECT FIELD WIRE TO COMPRESSOR CONTACTOR (CC1).
4. REMOVE J3 AT CC1 (T1) TO INSTALL LOW AMBIENT ACCESSORY.
5. IF REQUIRED, ATTACH CRANKCASE HEATER ACCESSORY TO CC1 (L1) AND CC1 (L2).
6. COMPRESSOR MOTOR THERMALLY PROTECTED. ALL 3 PHASE MODELS ARE PROTECTED UNDER PRIMARY SINGLE PHASE CONDITIONS.
7. TRANSFORMER FACTORY WIRED AS SHOWN BELOW. CHANGE PRIMARY VOLTAGE CONNECTIONS FOR ALTERNATE VOLTAGES, IF REQUIRED.

UNIT VOLTAGES - HZ	TRANSFORMER TERM.
200-220 - 50HZ	200
208 - 60HZ	230
230 - 60HZ	230
380 - 60HZ	400
380-415 - 50HZ	400
460 - 60HZ	460
575 - 60HZ	230

8. LOW VOLTAGE CIRCUIT IS N.E.C. CLASS 2 WITH A CLASS 2 TRANSFORMER, 24VAC, 50/60 HZ SUPPLIED.
9. MOTOR FACTORY WIRED FOR CORRECT VOLTAGE.
10. REMOVE PL23 JUMPER FOR OPTIONAL FT LOCATED IN BLOWER COMPARTMENT.
11. REMOVE PL36 FOR ECONOMIZER ACCESSORY. PL34 AND PL36 LOCATED IN RETURN AIR SECTION.
12. MAS ACCESSORY PROVIDED WITH ECONOMIZER. PL35 LOCATED IN BLOWER COMPARTMENT.

COMPONENT CODES

BC	BLOWER CONTACTOR
CA	COMFORT ALERT MODULE
CC	COMPRESSOR CONTACTOR
CCH	CRANKCASE HEATER
CDS	CLOGGED DRAIN SENSOR
CFS	CLOGGED FILTER SWITCH
COMP	COMPRESSOR
CT	CONTROL TRANSFORMER
DAT	DISCHARGE AIR SENSOR
DISC	DISCONNECT SWITCH
FLMS	FLAME SENSOR
FP	FAN PROVING SWITCH
FS	FREEZE SENSOR
FU	FUSE
GFCI	GROUND FAULT CONVENIENCE OUTLET
GL	GROUND LUG
GND	GROUND
HPC	HIGH PRESSURE CONTROL
IBM	INDOOR BLOWER MOTOR
IDM	INDUCED DRAFT MOTOR
IFC	INTEGRATED FURNACE CONTROL
J	JUMPER
LAC	LOW AMBIENT CONTROL
LPC	LOW PRESSURE CONTROL
MAS	MIXED AIR SENSOR
MRLC	MANUAL RESET LIMIT CONTROL
NPC	NEGATIVE PRESSURE SWITCH
OAT	OUTSIDE AIR SENSOR
OFM	OUTDOOR FAN MOTOR
PL	PLUG
PT	POWER TRANSFORMER
RAT	RETURN AIR SENSOR
RC	RUN CAPACITOR
RTU-C	ROOFTOP UNIT CONTROL
SE	SPARK ELECTRODE
##	WIRE TIE

WIRE COLOR CODE

BK.....BLACK	G.....GREEN	PR.....PURPLE
BR.....BROWN	GY.....GRAY	R.....RED
BL.....BLUE	O.....ORANGE	W .....WHITE
		Y.....YELLOW

ELECTRICAL WIRING SCHEMATIC

AC NON DDC 1 STG 036/048/060 J
208/230V, 1PH, 60HZ

APPROVED:	CHECKED:	ORIGINAL RELEASE NO.:
MODELED BY: TEW	DATE: 01-28-19	R-1073S063
PART NO.: 90-106688-31		REV: 00

Appendix G. Wiring Diagrams & Schematics (Cont.)

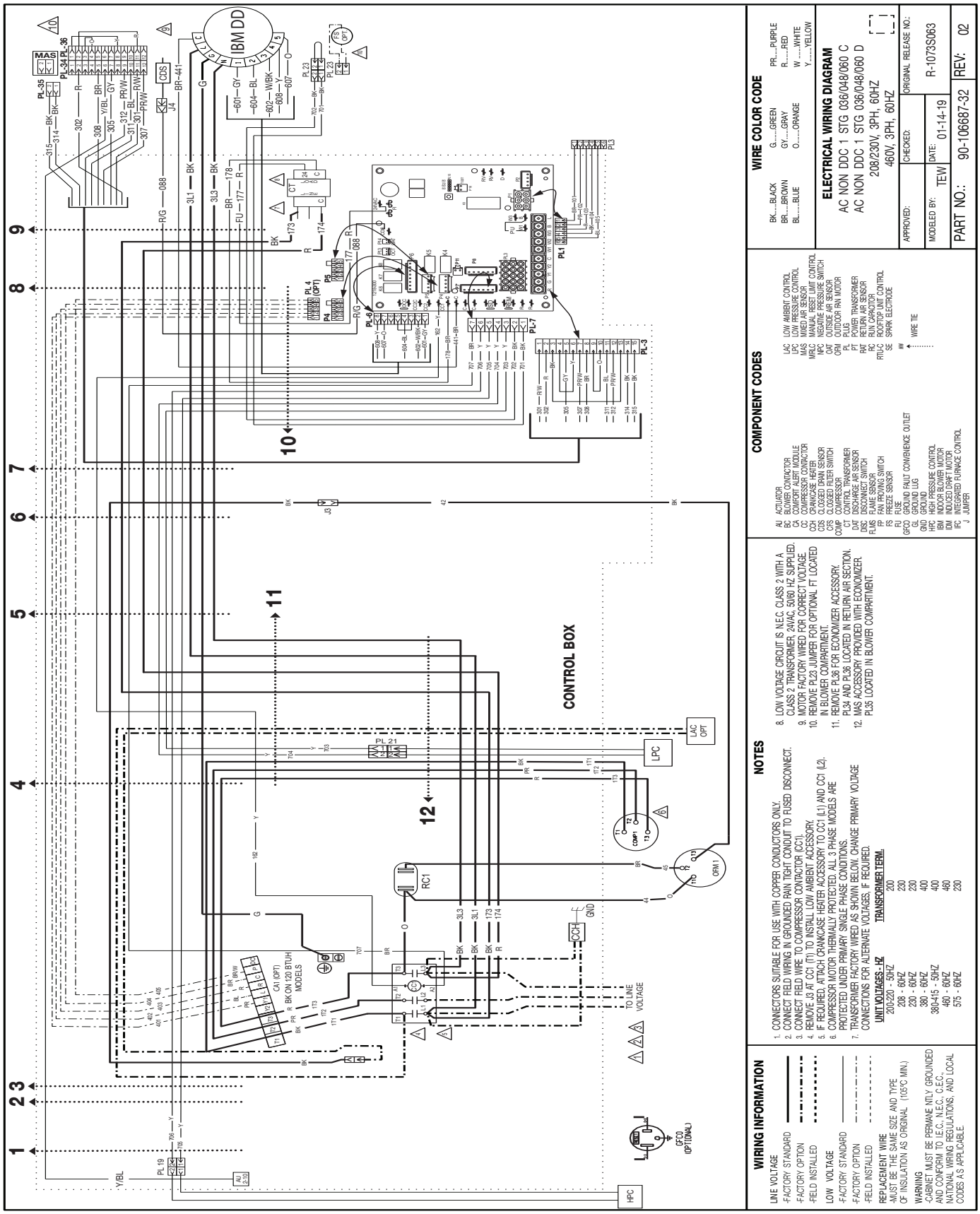

Appendix G. Wiring Diagrams & Schematics (Cont.)

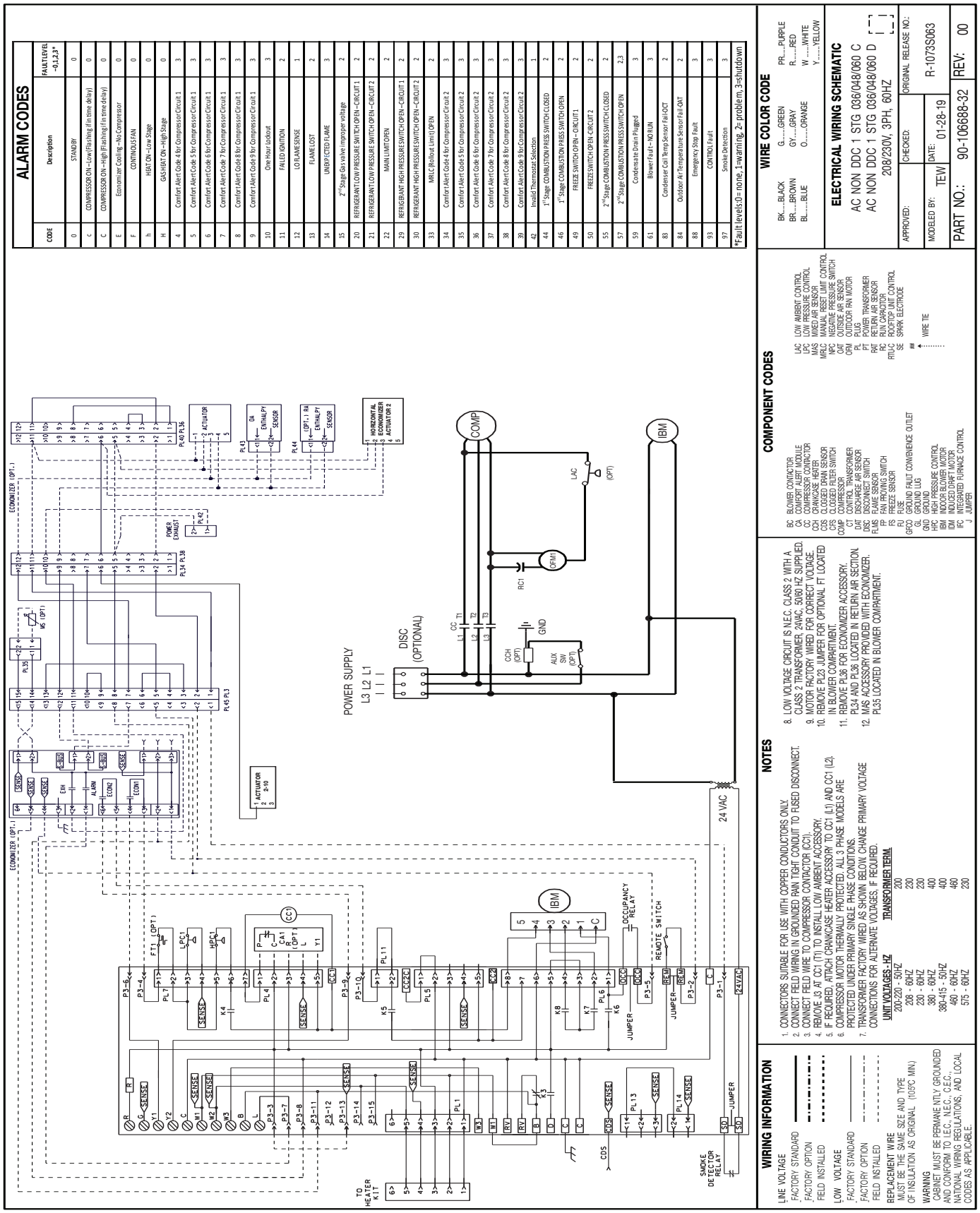

Appendix G. Wiring Diagrams & Schematics (Cont.)

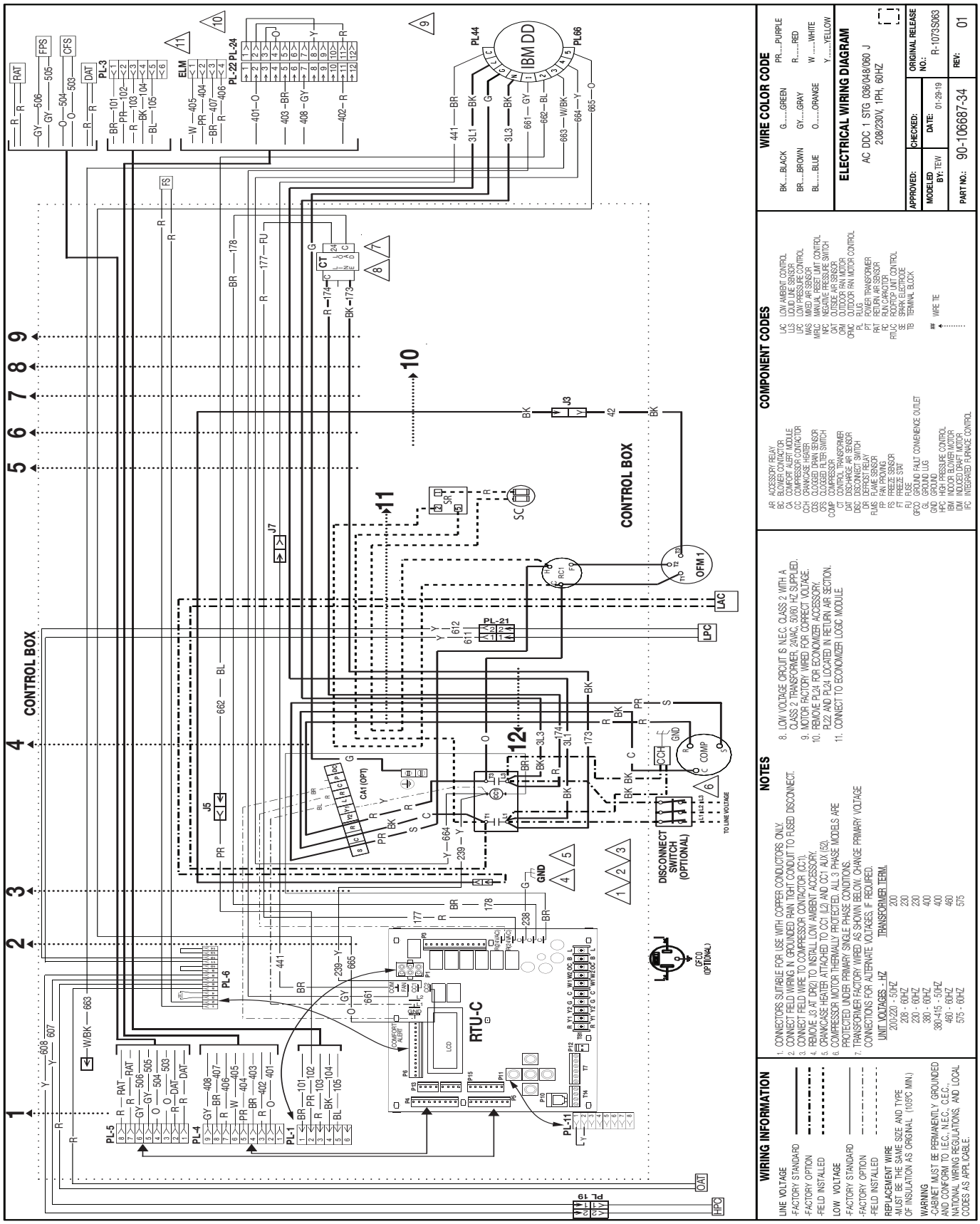

Appendix G. Wiring Diagrams & Schematics (Cont.)

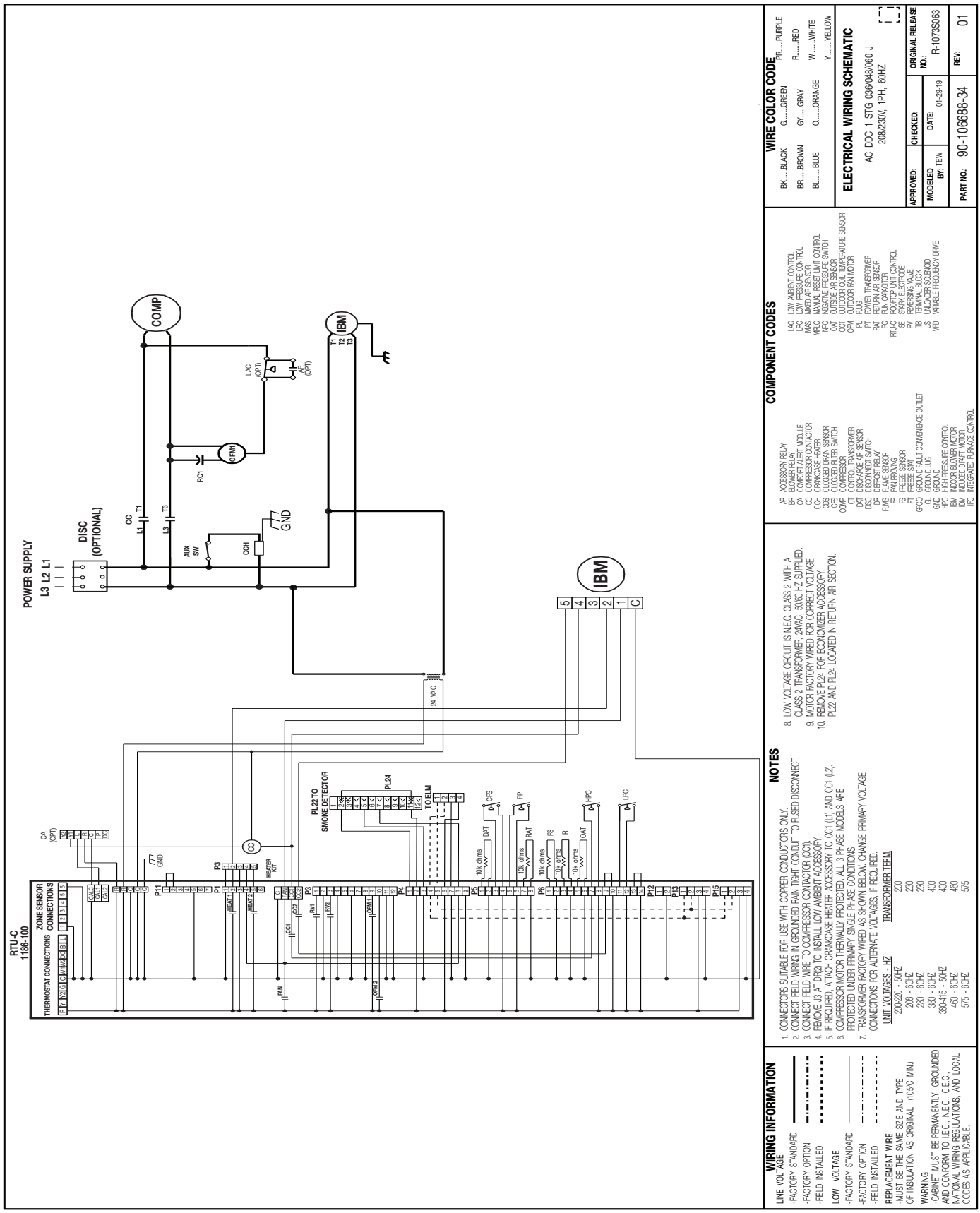

WIRING INFORMATION

LINE VOLTAGE
-FACTORY STANDARD
-FACTORY OPTION
-FELD INSTALLED

LOW VOLTAGE
-FACTORY STANDARD
-FACTORY OPTION
-FELD INSTALLED

REPLACEMENT WIRE
-MUST BE THE SAME SIZE AND TYPE OF INSULATION AS ORIGINAL (105°C MIN.)

WARNING
-CABINET MUST BE PERMANENTLY GROUNDED AND CONFORM TO I.E.C., N.E.C., C.E.C., NATIONAL WIRING REGULATIONS, AND LOCAL CODES AS APPLICABLE.

NOTES

1. CONNECTORS SUITABLE FOR USE WITH COPPER CONDUCTORS ONLY.
2. CONNECT FIELD WIRING IN GROUNDED RAIN TIGHT CONDUIT TO FUSED DISCONNECT.
3. CONNECT FIELD WIRE TO COMPRESSOR CONTACTOR (CC1).
4. REMOVE J3 AT DR2) TO INSTALL LOW AMBIENT ACCESSORY.
5. IF REQUIRED, ATTACH CRANKCASE HEATER ACCESSORY TO CC1 (L1) AND CC1 (L2), PROTECTED UNDER PRIMARY SINGLE PHASE CONDITIONS.
6. COMPRESSOR MOTOR THERMALLY PROTECTED. ALL 3 PHASE MODELS ARE
7. TRANSFORMER FACTORY WIRED AS SHOWN BELOW. CHANGE PRIMARY VOLTAGE CONNECTIONS FOR ALTERNATE VOLTAGES, IF REQUIRED.

UNIT VOLTAGES - HZ	TRANSFORMER TERM.
200/220 - 50HZ	200
208 - 60HZ	230
230 - 60HZ	230
330 - 60HZ	400
380/415 - 50HZ	400
460 - 60HZ	460
575 - 60HZ	575

8. LOW VOLTAGE CIRCUIT IS N.E.C. CLASS 2 WITH A CLASS 2 TRANSFORMER, 24VAC, 50/60 HZ SUPPLIED.
9. MOTOR FACTORY WIRED FOR CORRECT VOLTAGE.
10. REMOVE PL24 FOR ECONOMIZER ACCESSORY. PL22 AND PL24 LOCATED IN RETURN AIR SECTION.

COMPONENT CODES

AR	ACCESSORY RELAY
BR	BLOWER RELAY
CA	COMFORT ALERT MODULE
CC	COMPRESSOR CONTACTOR
CCH	CRANKCASE HEATER
CDS	CLOGGED DRAIN SENSOR
CFS	CLOGGED FILTER SWITCH
COMP	COMPRESSOR
CT	CONTROL TRANSFORMER
DAT	DISCHARGE AIR SENSOR
DSC	DISCONNECT SWITCH
DR	DEFROST RELAY
FLAS	FLAME SENSOR
FP	FAN PROVING
FS	FREEZE SENSOR
GFCI	GROUND FAULT CONVENIENCE OUTLET
GL	GROUND LUG
GND	GROUND
HPC	HIGH PRESSURE CONTROL
IBM	INDOOR BLOWER MOTOR
IDM	INDUCED DRAFT MOTOR
IFC	INTEGRATED FURNACE CONTROL
LAC	LOW AMBIENT CONTROL
LPC	LOW PRESSURE CONTROL
MAS	MIXED AIR SENSOR
MRLC	MANUAL RESET LIMIT CONTROL
NPC	NEGATIVE PRESSURE SWITCH
OAT	OUTSIDE AIR SENSOR
OCT	OUTDOOR COIL TEMPERATURE SENSOR
OFM	OUTDOOR FAN MOTOR
PL	PLUG
PT	POWER TRANSFORMER
RAT	RETURN AIR SENSOR
RC	RUN CAPACITOR
RTU-C	ROOFTOP UNIT CONTROL
SE	SPARK ELECTRODE
RS	REFRIGERANT SENSOR
TB	TERMINAL BLOCK
US	UNLOADER SOLENOID
VFD	VARIABLE FREQUENCY DRIVE

WIRE COLOR CODE

BK....BLACK	G.....GREEN	PR....PURPLE
BR....BROWN	GY.....GRAY	R.....RED
BL.....BLUE	O.....ORANGE	W .....WHITE
		Y.....YELLOW

ELECTRICAL WIRING SCHEMATIC

AC DDC 1 STG 036/048/060 J
208/230V, 1PH, 60HZ

APPROVED:	CHECKED:	ORIGINAL RELEASE NO.:
MODELED BY: TEW	DATE: 01-29-19	R-1073S063
PART NO.: 90-106688-34		REV: 01

Appendix G. Wiring Diagrams & Schematics (Cont.)

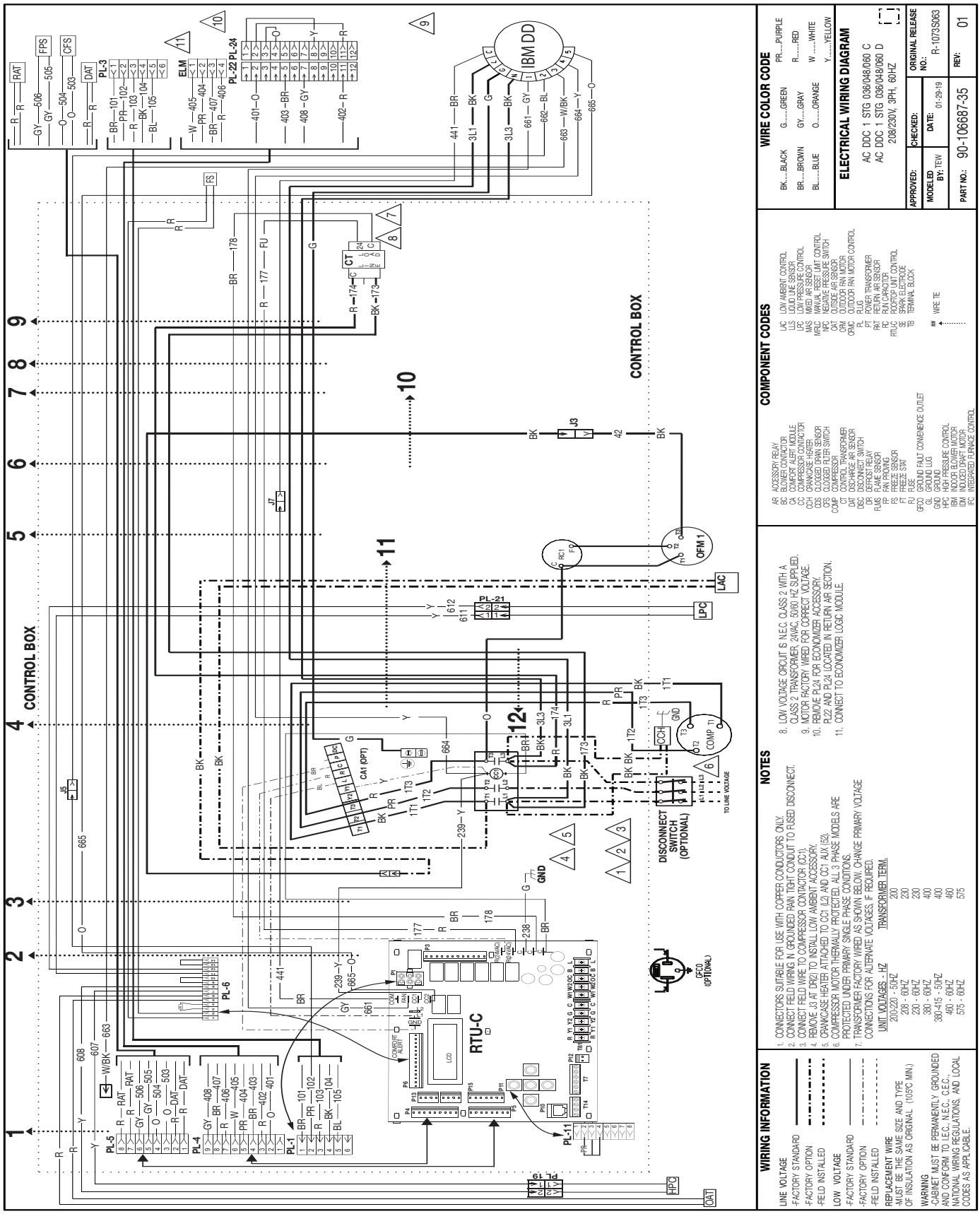

Appendix G. Wiring Diagrams & Schematics (Cont.)

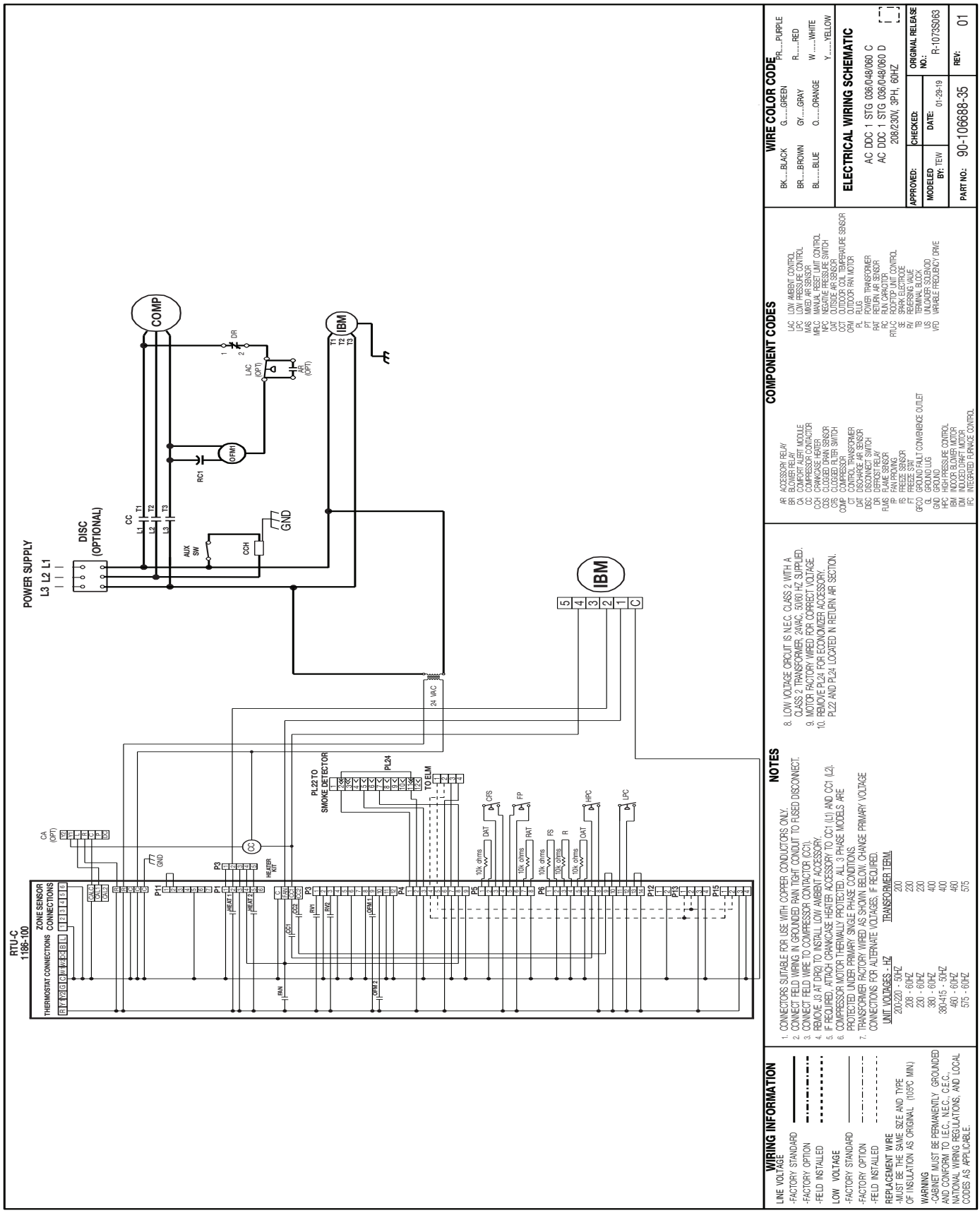

Appendix G. Wiring Diagrams & Schematics (Cont.)

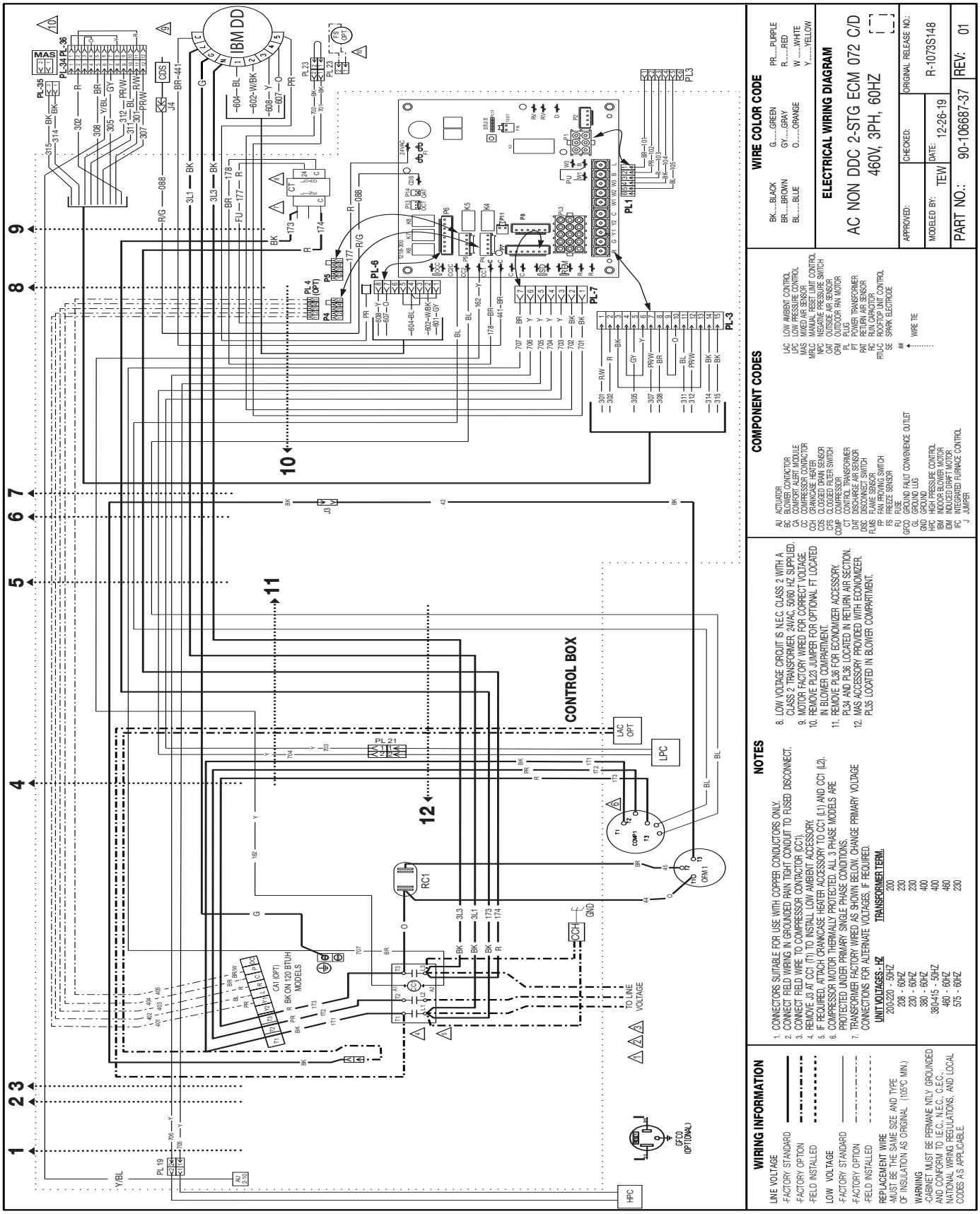

P. APPENDICES

Appendix G. Wiring Diagrams & Schematics (Cont.)

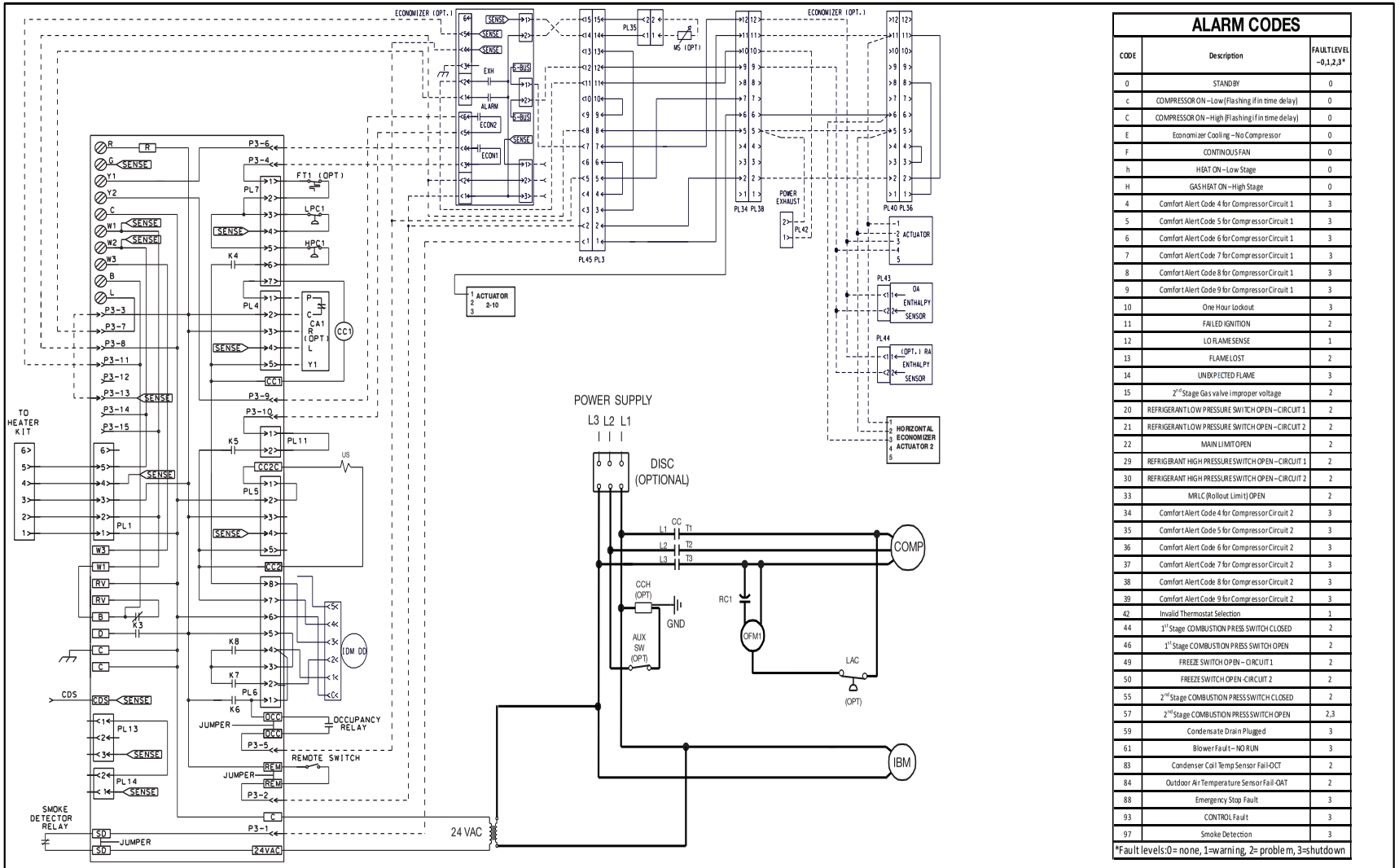

ALARM CODES

CODE	Description	FAULT LEVEL -0,1,2,3*
0	STANDBY	0
c	COMPRESSOR ON – Low (Flashing if in time delay)	0
C	COMPRESSOR ON – High (Flashing if in time delay)	0
E	Economizer Cooling – No Compressor	0
F	CONTINOUS FAN	0
h	HEAT ON – Low Stage	0
H	GAS HEAT ON – High Stage	0
4	Comfort Alert Code 4 for Compressor Circuit 1	3
5	Comfort Alert Code 5 for Compressor Circuit 1	3
6	Comfort Alert Code 6 for Compressor Circuit 1	3
7	Comfort Alert Code 7 for Compressor Circuit 1	3
8	Comfort Alert Code 8 for Compressor Circuit 1	3
9	Comfort Alert Code 9 for Compressor Circuit 1	3
10	One Hour Lockout	3
11	FAILED IGNITION	2
12	LO FLAME SENSE	1
13	FLAME LOST	2
14	UNEXPECTED FLAME	3
15	2nd Stage Gas valve improper voltage	2
20	REFRIGERANT LOW PRESSURE SWITCH OPEN – CIRCUIT 1	2
21	REFRIGERANT LOW PRESSURE SWITCH OPEN – CIRCUIT 2	2
22	MAIN LIMIT OPEN	2
29	REFRIGERANT HIGH PRESSURE SWITCH OPEN – CIRCUIT 1	2
30	REFRIGERANT HIGH PRESSURE SWITCH OPEN – CIRCUIT 2	2
33	MRLC (Rollout Limit) OPEN	2
34	Comfort Alert Code 4 for Compressor Circuit 2	3
35	Comfort Alert Code 5 for Compressor Circuit 2	3
36	Comfort Alert Code 6 for Compressor Circuit 2	3
37	Comfort Alert Code 7 for Compressor Circuit 2	3
38	Comfort Alert Code 8 for Compressor Circuit 2	3
39	Comfort Alert Code 9 for Compressor Circuit 2	3
42	Invalid Thermostat Selection	1
44	1st Stage COMBUSTION PRESS SWITCH CLOSED	2
46	1st Stage COMBUSTION PRESS SWITCH OPEN	2
49	FREEZE SWITCH OPEN – CIRCUIT 1	2
50	FREEZE SWITCH OPEN -CIRCUIT 2	2
55	2nd Stage COMBUSTION PRESS SWITCH CLOSED	2
57	2nd Stage COMBUSTION PRESS SWITCH OPEN	2,3
59	Condensate Drain Plugged	3
61	Blower Fault – NO RUN	3
83	Condenser Coil Temp Sensor Fail-OCT	2
84	Outdoor Air Temperature Sensor Fail-OAT	2
88	Emergency Stop Fault	3
93	CONTROL Fault	3
97	Smoke Detection	3

*Fault levels:0= none, 1=warning, 2= problem, 3=shutdown

WIRING INFORMATION

LINE VOLTAGE
- FACTORY STANDARD
- FACTORY OPTION
- FIELD INSTALLED

LOW VOLTAGE
- FACTORY STANDARD
- FACTORY OPTION
- FIELD INSTALLED

REPLACEMENT WIRE
MUST BE THE SAME SIZE AND TYPE OF INSULATION AS ORIGINAL (105°C MIN.)

WARNING
CABINET MUST BE PERMANENTLY GROUNDED AND CONFORM TO I.E.C., N.E.C., C.E.C., NATIONAL WIRING REGULATIONS, AND LOCAL CODES AS APPLICABLE.

NOTES

1. CONNECTORS SUITABLE FOR USE WITH COPPER CONDUCTORS ONLY.
2. CONNECT FIELD WIRING IN GROUNDED RAIN TIGHT CONDUIT TO FUSED DISCONNECT.
3. CONNECT FIELD WIRE TO COMPRESSOR CONTACTOR (CC1).
4. REMOVE J3 AT CC1 (T1) TO INSTALL LOW AMBIENT ACCESSORY.
5. IF REQUIRED, ATTACH CRANKCASE HEATER ACCESSORY TO CC1 (L1) AND CC1 (L2).
6. COMPRESSOR MOTOR THERMALLY PROTECTED. ALL 3 PHASE MODELS ARE PROTECTED UNDER PRIMARY SINGLE PHASE CONDITIONS.
7. TRANSFORMER FACTORY WIRED AS SHOWN BELOW. CHANGE PRIMARY VOLTAGE CONNECTIONS FOR ALTERNATE VOLTAGES, IF REQUIRED.

UNIT VOLTAGES - HZ	TRANSFORMER TERM.
200-220 - 50HZ	200
208 - 60HZ	230
230 - 60HZ	230
380 - 60HZ	400
380-415 - 50HZ	400
460 - 60HZ	460
575 - 60HZ	230

8. LOW VOLTAGE CIRCUIT IS N.E.C. CLASS 2 WITH A CLASS 2 TRANSFORMER, 24VAC, 50/60 HZ SUPPLIED.
9. MOTOR FACTORY WIRED FOR CORRECT VOLTAGE.
10. REMOVE PL23 JUMPER FOR OPTIONAL FT LOCATED IN BLOWER COMPARTMENT.
11. REMOVE PL36 FOR ECONOMIZER ACCESSORY. PL34 AND PL36 LOCATED IN RETURN AIR SECTION.
12. MAS ACCESSORY PROVIDED WITH ECONOMIZER. PL35 LOCATED IN BLOWER COMPARTMENT.

COMPONENT CODES

BC	BLOWER CONTACTOR	LAC	LOW AMBIENT CONTROL
CA	COMFORT ALERT MODULE	LPC	LOW PRESSURE CONTROL
CC	COMPRESSOR CONTACTOR	MAS	MIXED AIR SENSOR
CCH	CRANKCASE HEATER	MRLC	MANUAL RESET LIMIT CONTROL
CDS	CLOGGED DRAIN SENSOR	NPC	NEGATIVE PRESSURE SWITCH
CFS	CLOGGED FILTER SWITCH	OAT	OUTSIDE AIR SENSOR
COMP	COMPRESSOR	OFM	OUTDOOR FAN MOTOR
CT	CONTROL TRANSFORMER	PL	PLUG
DAT	DISCHARGE AIR SENSOR	PT	POWER TRANSFORMER
DISC	DISCONNECT SWITCH	RAT	RETURN AIR SENSOR
FLMS	FLAME SENSOR	RC	RUN CAPACITOR
FP	FAN PROVING SWITCH	RTU-C	ROOFTOP UNIT CONTROL
FS	FREEZE SENSOR	SE	SPARK ELECTRODE
FU	FUSE	US	UNLOADER SOLENOID
GFCI	GROUND FAULT CONVENIENCE OUTLET		
GL	GROUND LUG		
GND	GROUND		
HPC	HIGH PRESSURE CONTROL		
IBM	INDOOR BLOWER MOTOR		
IDM	INDUCED DRAFT MOTOR		
IFC	INTEGRATED FURNACE CONTROL		
J	JUMPER		

WIRE COLOR CODE

BK.....BLACK	G.....GREEN	PR.....PURPLE
BR.....BROWN	GY.....GRAY	R.....RED
BL.....BLUE	O.....ORANGE	W .....WHITE
		Y.....YELLOW

ELECTRICAL WIRING SCHEMATIC

AC NON DDC 2 STG 072 C
AC NON DDC 2 STG 072 D
208/230V, 3PH, 60HZ

APPROVED:	CHECKED:	ORIGINAL RELEASE NO.:
MODELED BY: TEW	DATE: 01-30-20	R-1073S148
PART NO.: 90-106688-37		REV: 01

Appendix G. Wiring Diagrams & Schematics (Cont.)

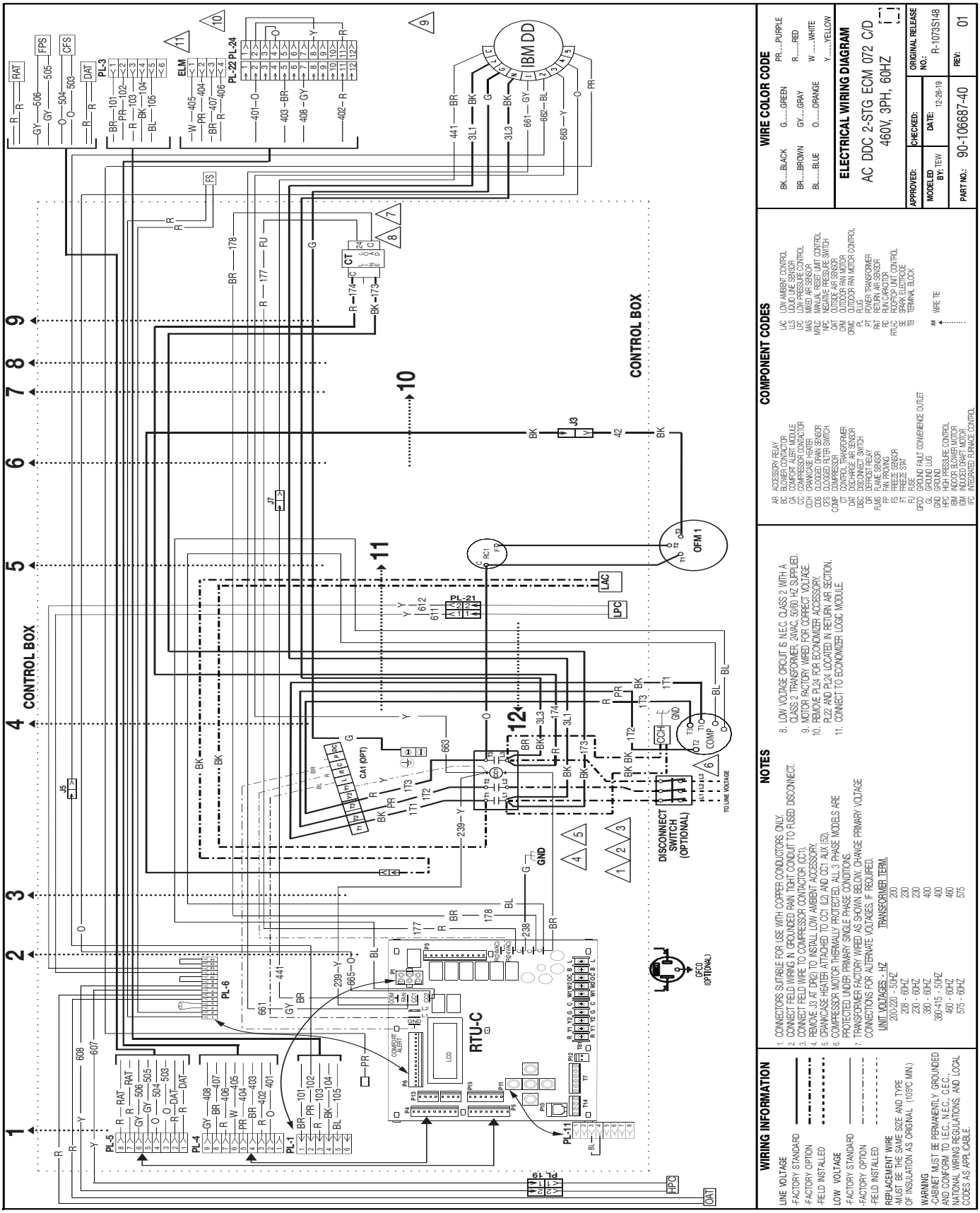

Appendix G. Wiring Diagrams & Schematics (Cont.)

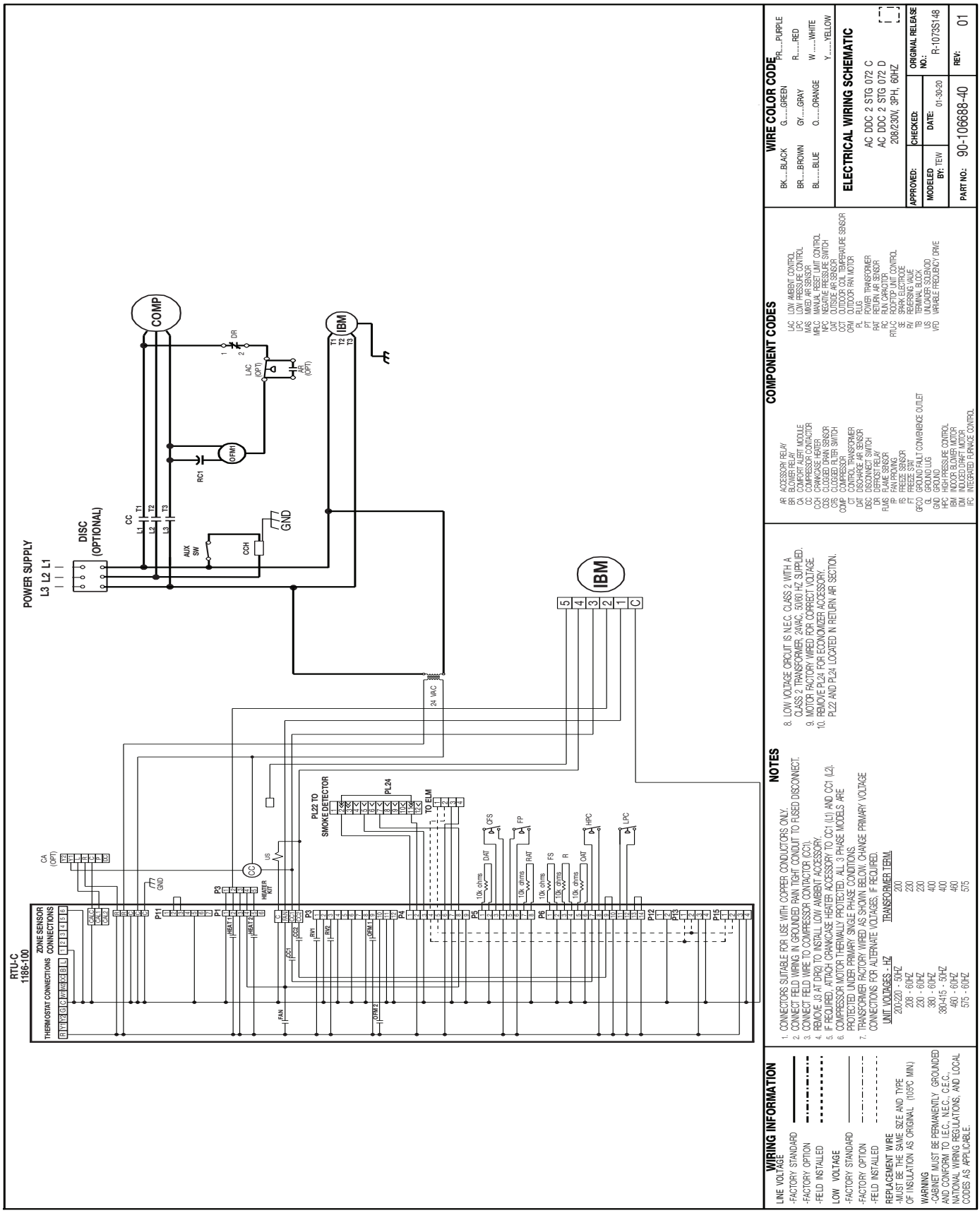

Appendix G. Wiring Diagrams & Schematics (Cont.)

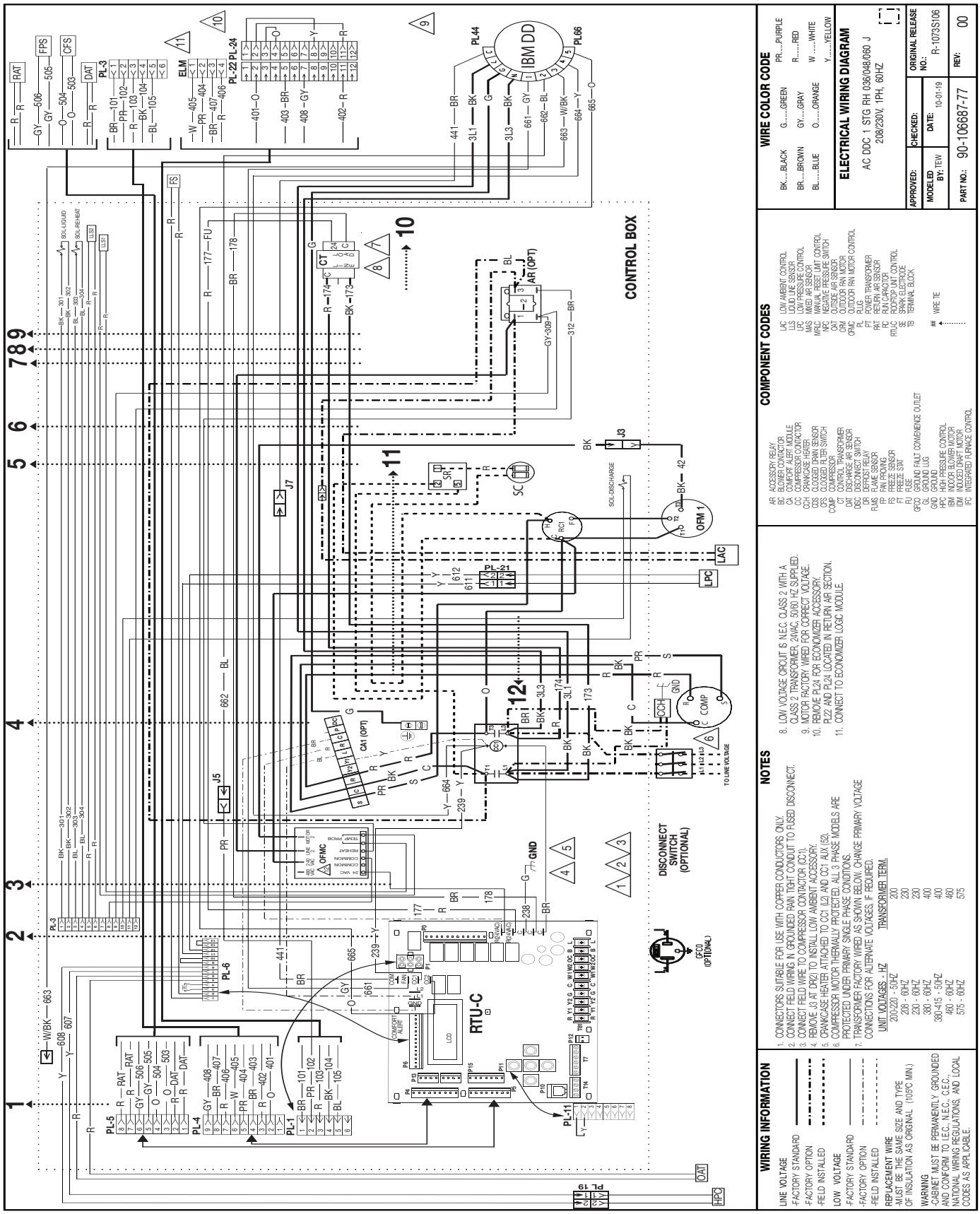

Appendix G. Wiring Diagrams & Schematics (Cont.)

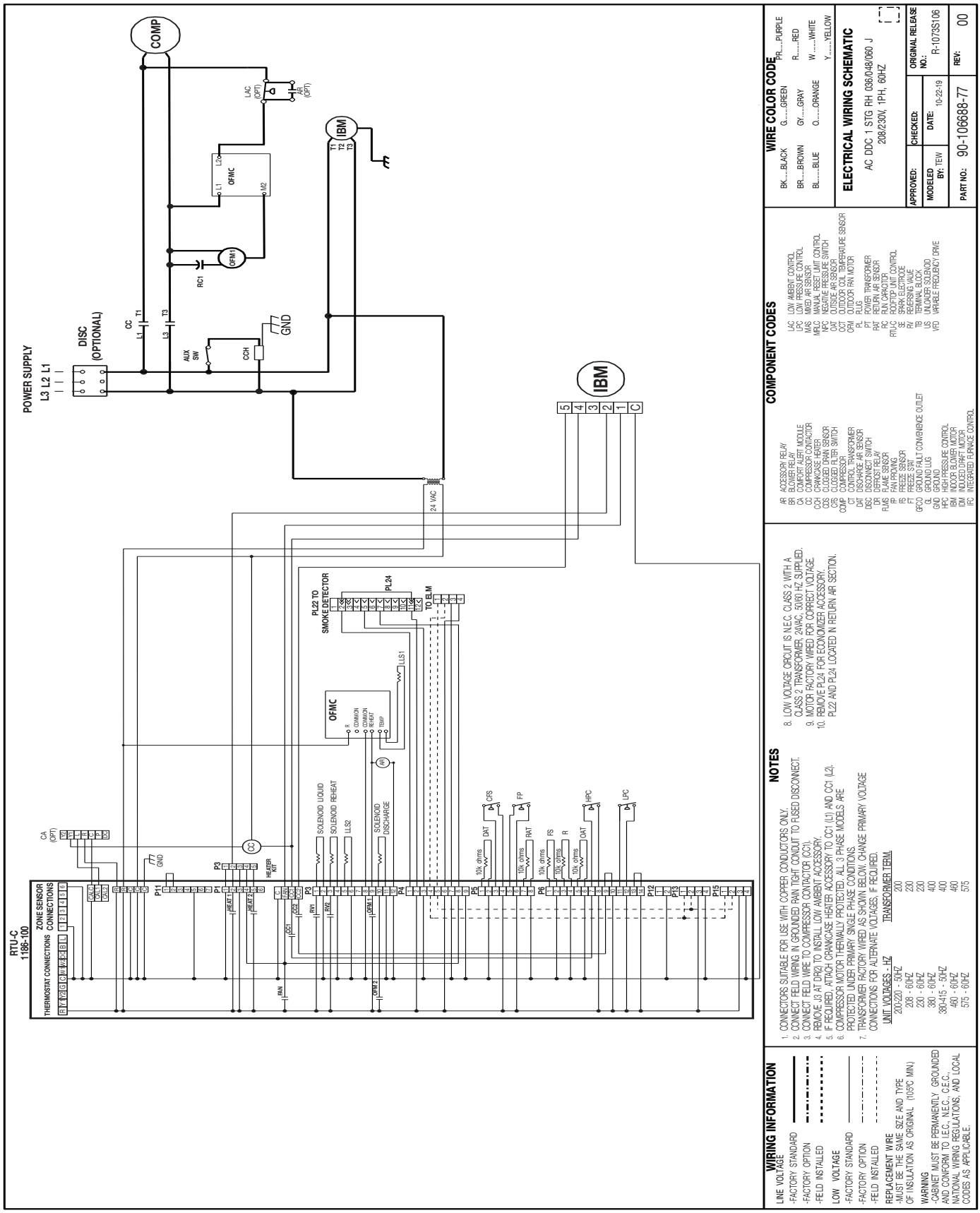

Appendix G. Wiring Diagrams & Schematics (Cont.)

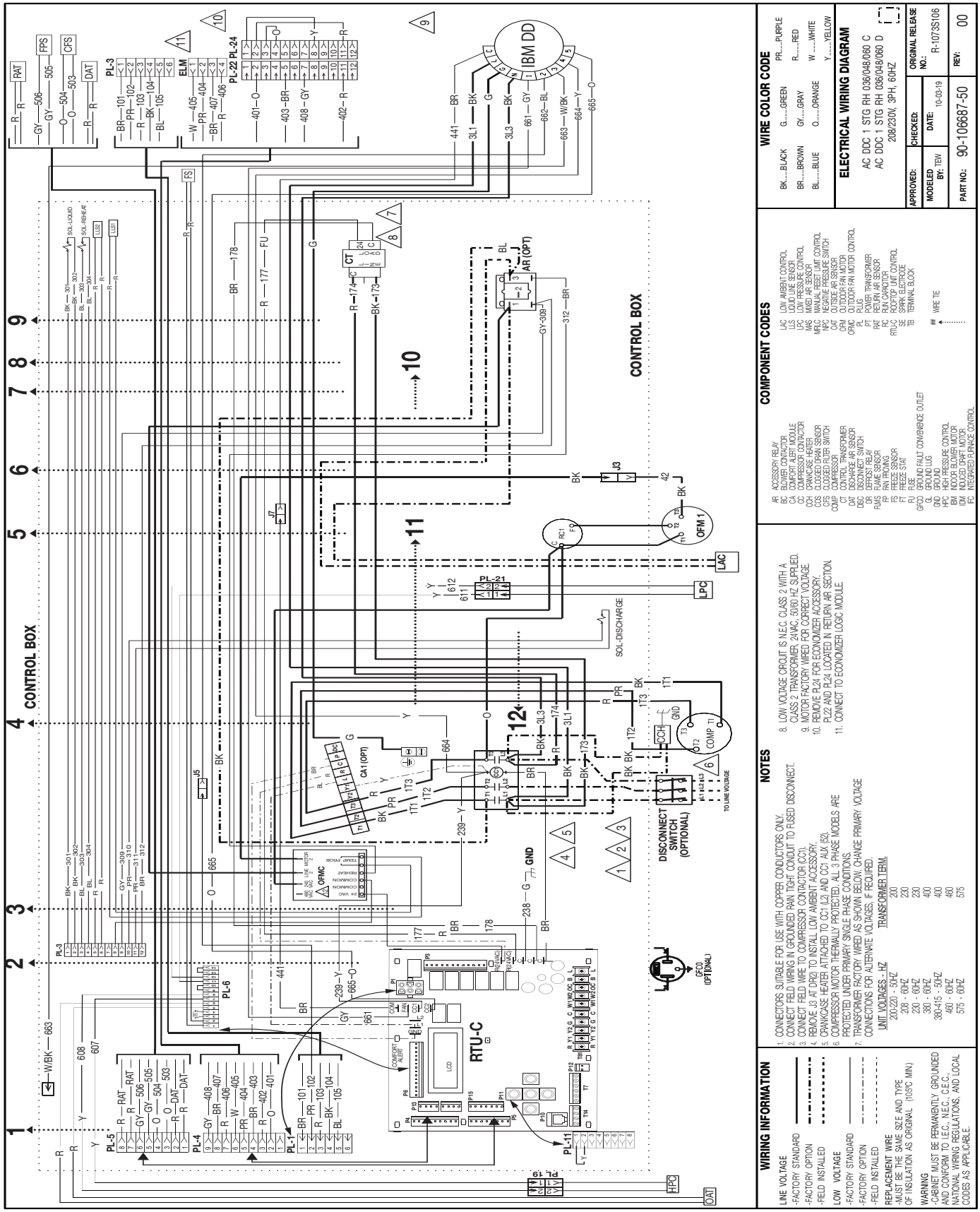

Appendix G. Wiring Diagrams & Schematics (Cont.)

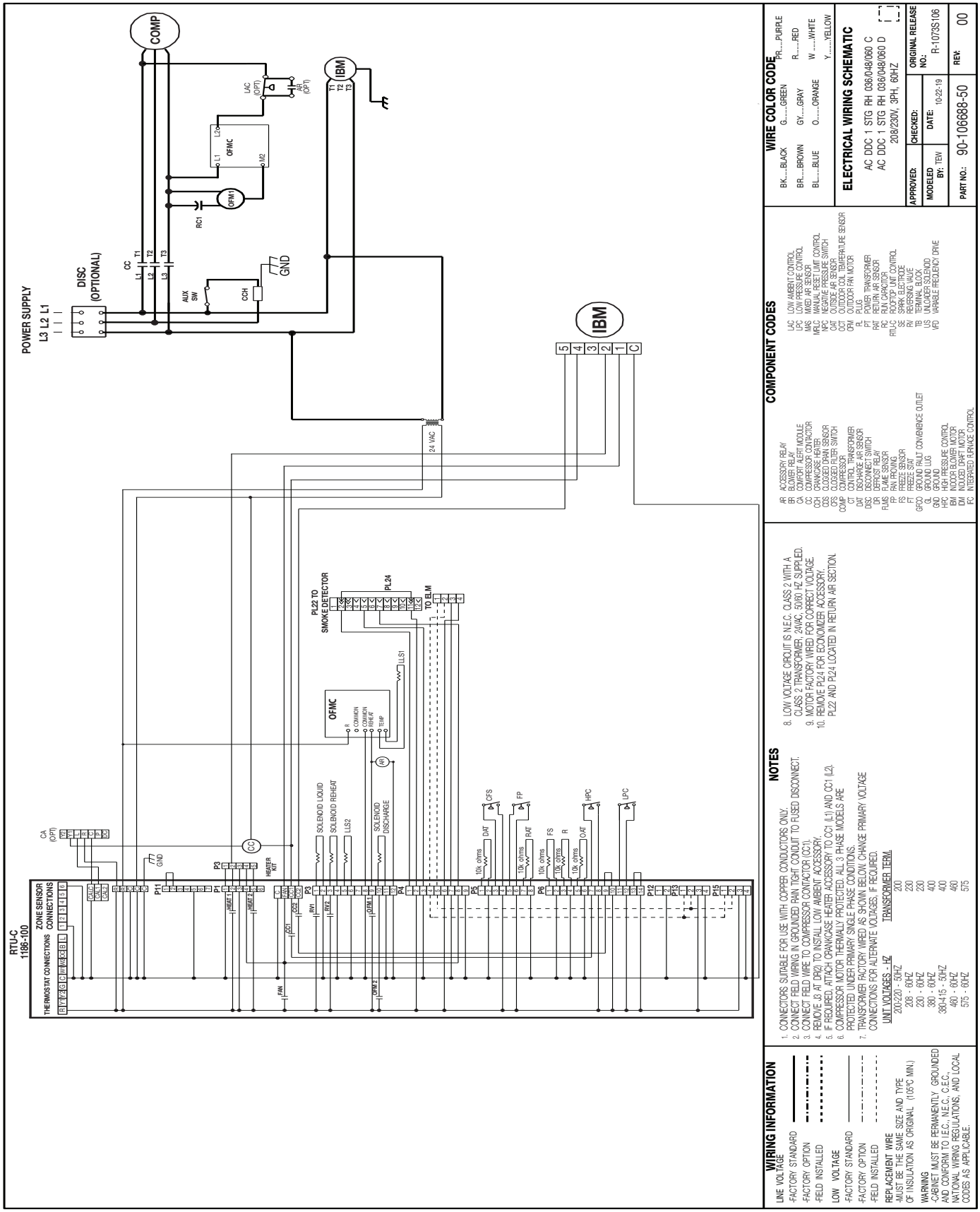

Appendix G. Wiring Diagrams & Schematics (Cont.)

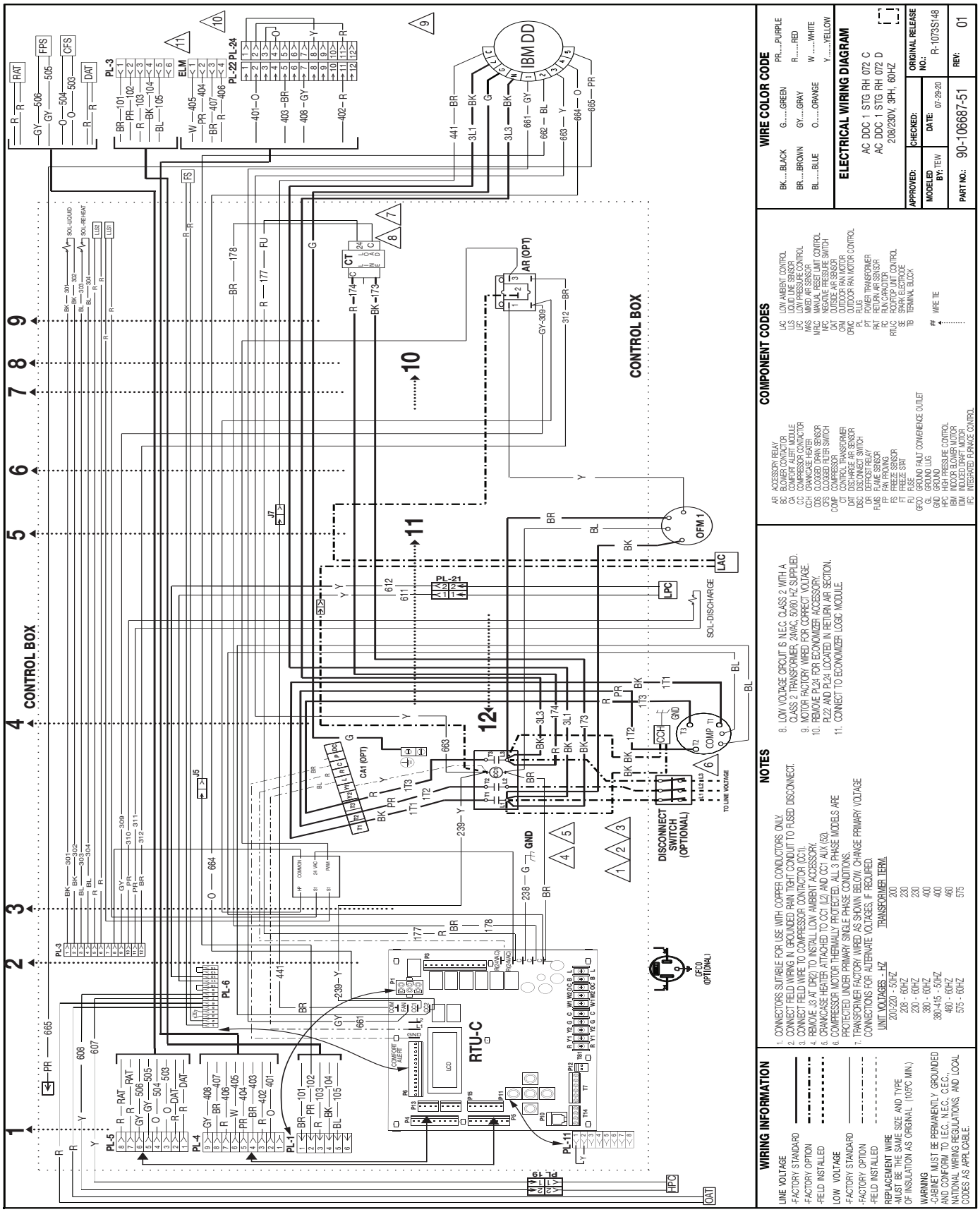

Appendix G. Wiring Diagrams & Schematics (Cont.)

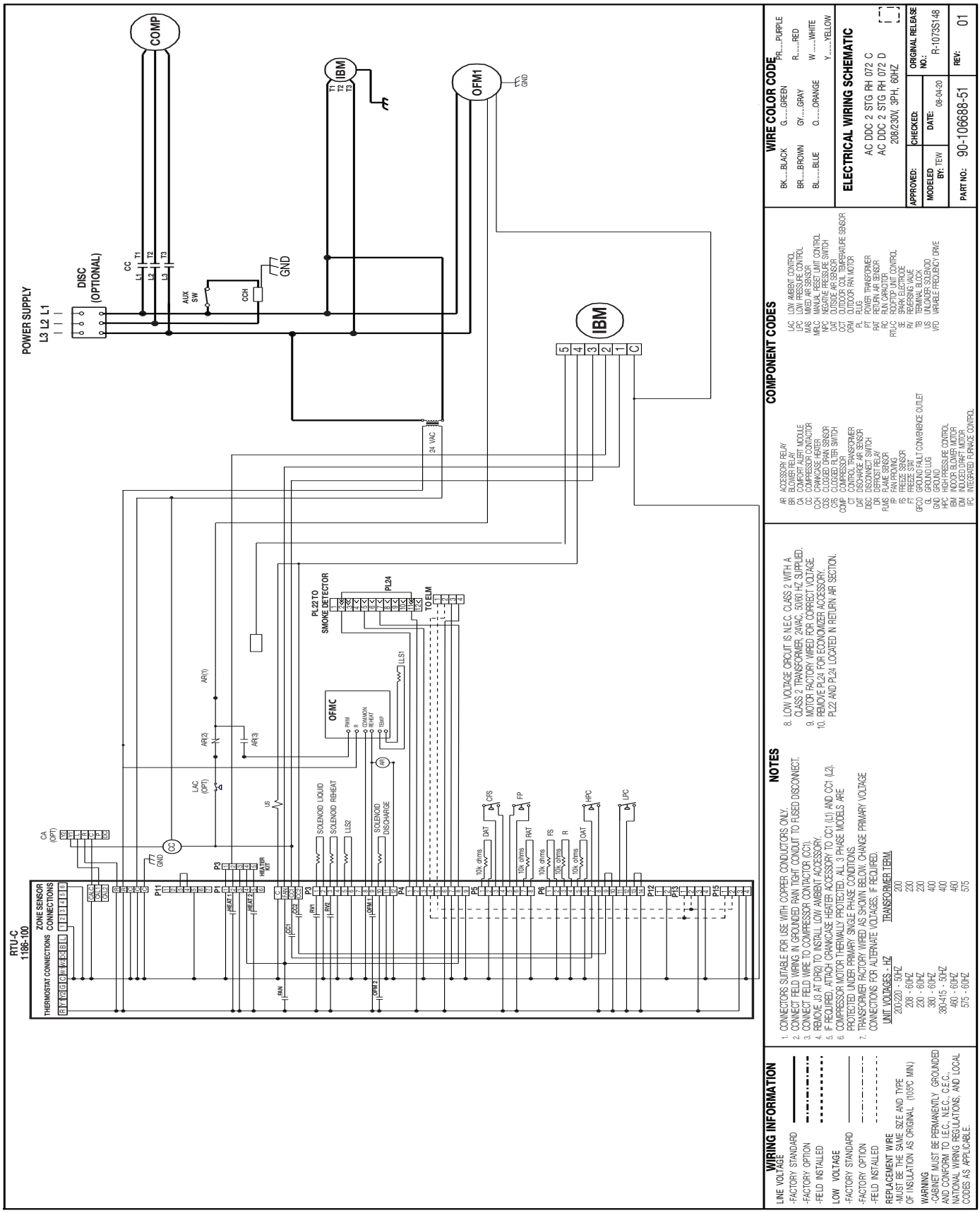

J. Unit Tie-Down

ENGINEERING EXPRESS®

160 SW 12TH AVE SUITE 106, DEERFIELD BEACH, FL 33442
(954) 354-0660 | ENGINEERINGEXPRESS.COM

Technical Evaluation Report

DIVISION: 23 08 00–COMMISSIONING OF HVAC

FL 26981.1
THIS DOCUMENT CONTAINS (5) PAGES

EVALUATION SUBJECT: **RHEEM PACKAGED UNITS** 17-4893

REPORT HOLDER:
RHEEM MANUFACTURING COMPANY, INC.
1100 ABERNATHY ROAD SUITE 1400
ATLANTA, GA, USA
770-351-3000 | RHEEM.COM

SCOPE OF EVALUATION (compliance with the following codes):

THIS IS A STRUCTURAL (WIND) PERFORMANCE EVALUATION ONLY. NO ELECTRICAL OR TEMPERATURE PERFORMANCE RATINGS OR CERTIFICATIONS ARE OFFERED OR IMPLIED HEREIN.

This Product Evaluation Report is being issued in accordance with the requirements of the **Florida Building Code Sixth Edition (2017)** per FBC Section 104.11, FMC 301.15, FBC Building Ch. 16, ASCE-7-10, FBC Existing Building sections 707.1, 707.2, FBC Building 1522.2, FBC Residential M1202.1, M1301.1, & FS 471.025. The product noted on this report has been tested and evaluated as summarized herein.

SUBSTANTIATING DATA:

• Product Evaluation Documents Test Reports
Substantiating documentation has been submitted to provide this TER and is summarized in the sections below.
Test Report: 0320.01-18 (American Test Lab of South FL)

• Structural Engineering Calculations
Structural engineering calculations have been prepared which evaluate the product based on comparative and/or rational analysis to qualify the following design criteria:

- Maximum allowable uplift, sliding, & overturning moment for ground and roof applications
- Maximum unit anchorage to steel curb

NOTE: No 33% increase in allowable stress has been used in the design of this product.

INSTALLATION:
The product(s) listed above shall be installed in strict compliance with this product evaluation & manufacturer-provided model specifications.
The product components shall be of the material specified in the manufacturer-provided product specifications. All screws must be installed in accordance with the applicable provisions & anchor manufacturer's published installation instructions.

LIMITATIONS & CONDITIONS OF USE:
Use of this product shall be in strict accordance with this product evaluation as noted herein. The supporting host structure shall be designed to resist all superimposed loads as determined by others on a site-specific basis as may be required by the Authority Having Jurisdiction. Host structure conditions which are not accounted for in this product's respective anchor schedule shall be designed for on a site-specific basis by a registered professional engineer. No evaluation is offered for the host supporting structure by use of this document; Adjustment factors noted herein and the applicable codes must be considered, where applicable.
All supporting components which are permanently installed shall be protected against corrosion, contamination, and other such damage at all times.

OPTIONS:
This evaluation is valid for models shown in the last page

FINISH:
Baked Enamel

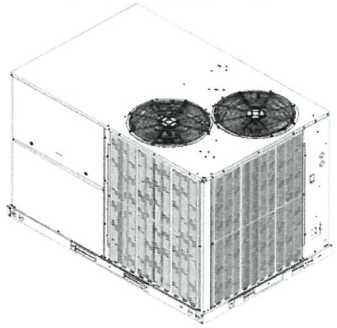

NOTE: GRAPHICAL DEPICTIONS IN THIS REPORT ARE FOR ILLUSTRATIVE PURPOSES ONLY AND MAY DIFFER IN APPEARANCE

UNIT CASING MATERIAL:
20ga galv. sheet steel ASTM A653 Type B.
Removable Top & side covers secured with #10 Sheet metal Hex Head Screws
Knockouts provided for utility & control connections.

INSTALLATION:
Shall follow manufacturer specifications as well as information provided herein

STRUCTURAL PERFORMANCE:
Models referenced herein are subject to the following design limitations:
ASCE-710 Exposure Categories C & D (HVHZ)
Maximum Mean Roof Height (MRH) = 400ft
Up to and including 175mph (Vult) for the following Design Pressures:

Maximum Rated Wind Pressure:

200psf Lateral 133psf Uplift (ASD)

Site specific wind analysis may produce alternate limitations provided maximum rated wind pressure is not exceeded.

For more information and deviations to this evaluation visit ecalc.io/197799 or scan the QR code

ECALC.IO/197799

FRANK L. BENNARDO LICENSE No PE0046549 STATE OF FLORIDA PROFESSIONAL ENGINEER

Engineer Signature & Seal:

February 12, 2020

Frank L. Bennardo, P.E., SECB
ENGINEERING EXPRESS®
PE #0046549 CA #9885

J. Unit Tie-Down

SECTION 2 PRODUCT INSTALLATION

GROUND MOUNT APPLICATIONS
CONFIGURATION A
Note: Design & installation of ground host is by others per site specific conditions

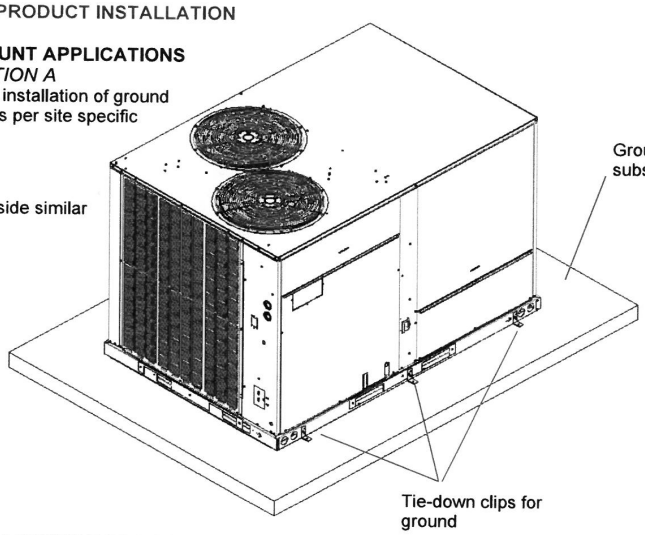

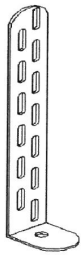

TIE-DOWN CLIP
(GROUND APPLICATION)

Miami Tech CUTD 1" wide ASTM A653 galvanized steel 0.07" thick of varying length (FL19731.2) or *equivalent* for all cabinets tied down to a ground structure; fasten clip to structure using anchor from Anchor Schedule A to Host Structure Table and (3) #12 SAE Gr 2 self-drilling screw to fasten clip to unit base rail. Install in unit with quantities shown ((3) per side). Locate clips at 8.5" min away from the appropriate corner using three clips per side and three clips opposite side in the same configuration.

ANCHOR SCHEDULE TO HOST STRUCTURE

Pressure Lateral (Uplift) (psf)	Concrete	Steel Curb With Clip	Steel Curb Screw
Ground	A	-	-
Up to 81 (64)	-	-	C
Up to 200 (133)	-	B	-

A. – 5/16" ELCO ULTRACON Anchor embedded 2" in 3,515 psi concrete. 3 1/8" from edge minimum & 5" spacing minimum. NOA No. 17-1227.22

B. – #12 TEK Screws, (14) screws per clip, (5) top front side, (4) top back side and (5) bottom front side.

C. – 3/8" SAE Grade 5 Self-Drilling Screw at 6" O.C, (15) per long side and (10) per short side.

STEEL CURB
(ROOF APPLICATION)

Steel curb to be a minimum of 16ga ASTM A653 steel

Curb Clip to be 14ga ASTM A653 steel min (Microhold)

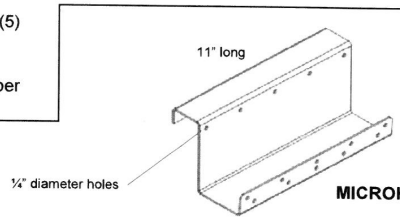

MICROHOLDS

CURB MOUNT APPLICATIONS
CONFIGURATION B
Note: Design & installation of curb to host by others per site specific conditions

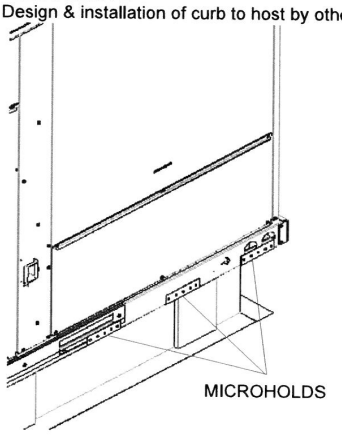

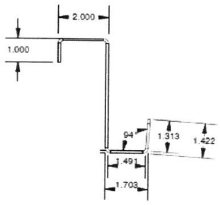

Curb Clip A

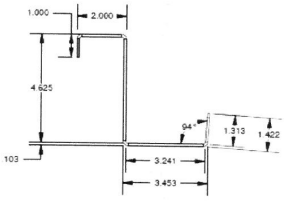

Curb Clip C

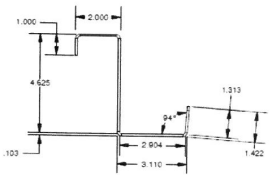

Curb Clip B

IN ALL CONDITIONS IT IS THE RESPONSIBILITY OF THE PERMIT HOLDER TO ENSURE THE HOST STRUCTURE IS CAPABLE OF WITHSTANDING FORCES BY SITE-SPECIFIC DESIGN. NO WARRANTY OF ANY KIND, EXPRESSED OR IMPLIED, IS OFFERED BY RHEEM MANUFACTURING COMPANY, OR ENGINEERING EXPRESS AS TO THE INTEGRITY OF THE HOST STRUCTURE TO CARRY LOADS INCURRED BY THIS UNIT.

J. Unit Tie-Down

CURB CLIP LOCATION

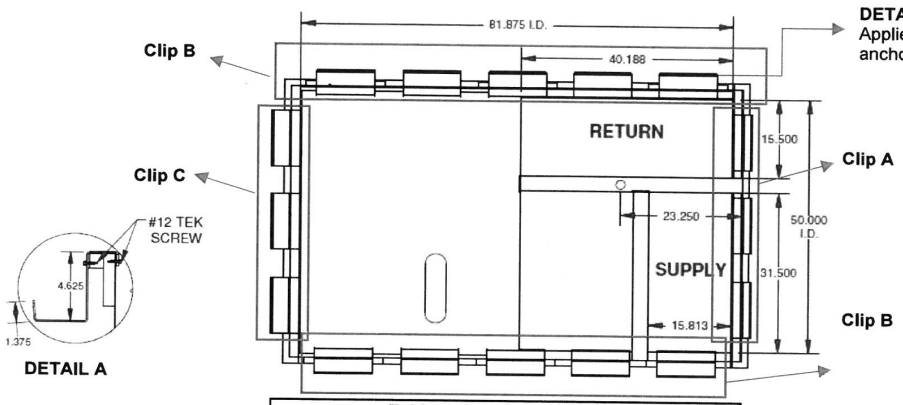

DETAIL A:
Applies for all clips and anchors type B

RGEDZR – 150 Clip Configuration:
(5) clips to each long side, 3" away from corners, spaced at 5.22".

(3) clips to each short side, 3" away from corners. Spaced at 5.50"

See note (3) page (4)

Table 1: Clip Curb Schedule

Unit Model			Number of Clips (Pcs)
(-)GEC - 036	(-)ACC - 036	(-)HPC - 036	4 LS - 2 SS
(-)GEC - 048	(-)ACC - 048	(-)HPC - 048	4 LS - 2 SS
(-)GEC - 060	(-)ACC - 060	(-)HPC - 060	4 LS - 2 SS
(-)GEC - 072	(-)ACC - 072	(-)HPC - 072	4 LS - 2 SS
(-)GED - 090	(-)ACD - 090	(-)HPD - 090	5 LS - 3 SS
(-)GED - 102	(-)ACD - 102	(-)HPD - 102	5 LS - 3 SS
(-)GED - 120	(-)ACD - 120	(-)HPD - 120	5 LS - 3 SS
(-)GED - 150	(-)ACD - 150		5 LS - 3 SS

#Clip Designation (5 LS= 5 clips each Long Side; 3 SS= 3 clips each Short Side) equally spaced

Unit Model Note: '(-)' designates equivalent trade brands with similar cabinetry and may vary depending on brand

See pressures on page (2) for alternative anchor limitations

ALTERNATIVE ANCHORAGE TO CURB

STEEL CURB WITH SCREW
CONFIGURATION C

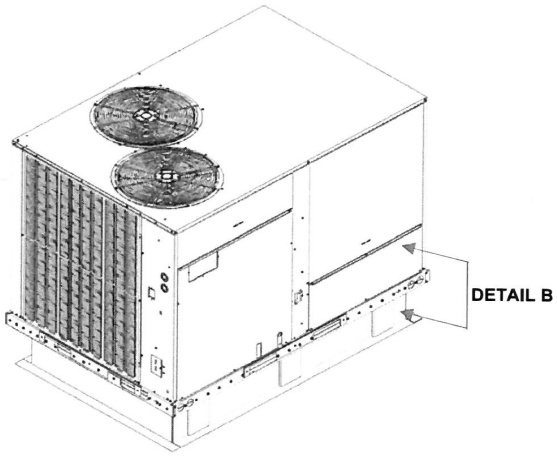

Mechanical Unit Curb Mounted

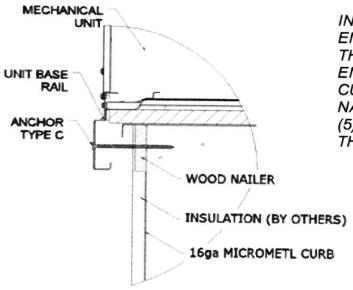

INSTALLER TO ENSURE THAT THREADED PORTION ENGAGES STEEL CURB BEYOND WOOD NAILER WITH MINIMUM (5) PITCHES PAST THE THREAD PLANE

DETAIL B

SECTION 3 MODELS SUMMARY, DIMENSION & NOTES

TABLE 2: Qualified Tested Unit Construction Metal Cabinetry				
Unit Model	Operating Dimensions w/ screw heads			Operating Weight (lbs)
	Width (in)	Length (in)	Height (in)	
RGEDZR - 150	59 1/2	90 1/10	59 7/10	1070

TESTED UNIT LIMITATIONS

1. The unit model listed above was tested and designed as worst-case configurations of model units listed in *Evaluation Model Series Matrix,* remaining unit models are certified by this approval as long as they have identical construction as those listed above and are of equal or lesser dimensions (length, width, height).
2. Dimensions shown are measured from outermost points of unit, including screw heads.
3. Curb clips shall be as close as possible from the shown locations; installers shall verify any interference between clip attachment and internal components of the unit and move clip within the tolerance allowed.

REQUIRED WIND PRESSURES

Design pressures calculated for use with these units shall be determined by others on a job-specific basis in accordance with the governing code. Site specific load requirements for wind load shall be determined in accordance with ASCE 7 and the codes referenced herein by separate engineering certification and shall be less or equal to design pressures capacity values listed herein for any assembly as shown.

TEST REPORTS UTILIZED

Design and certification of the unit cabinetry is approved through *American Test Lab of South Florida*
Report #: 0320.01-18
Tested according ASTM E330-05 and TAS 202-94.

TABLE 3: Evaluation Model Sereis Matrix (Unit Construction Metal Cabinetry)				
Unit Model	Operating Dimensions w/ screw heads			Operating Weight (lbs)
	Width (in)	Length (in)	Height (in)	
(-)ACC - 036	46 3/4	78 3/8	41 3/8	453
(-)ACC - 048	46 3/4	78 3/8	41 3/8	477
(-)ACC - 060	46 3/4	78 3/8	41 3/8	482
(-)ACC - 072	46 3/4	78 3/8	41 3/8	689
(-)ACD - 090	59 15/32	89 5/16	49 1/4	722
(-)ACD - 102	59 15/32	89 5/16	49 1/4	748
(-)ACD - 120	59 15/32	89 5/16	49 1/4	777
(-)ACD - 150	59 1/2	90 1/10	59 7/10	946

TABLE 3.1: Evaluation Model Sereis Matrix (Unit Construction Metal Cabinetry)				
Unit Model	Operating Dimensions w/ screw heads			Operating Weight (lbs)
	Width (in)	Length (in)	Height (in)	
(-)GEC - 036	46 3/4	78 3/8	41 3/8	453
(-)GEC - 048	46 3/4	78 3/8	41 3/8	477
(-)GEC - 060	46 3/4	78 3/8	41 3/8	482
(-)GEC - 072	46 3/4	78 3/8	41 3/8	689
(-)GED - 090	59 15/32	89 5/16	49 1/4	846
(-)GED - 102	59 15/32	89 5/16	49 1/4	872
(-)GED - 120	59 15/32	89 5/16	49 1/4	901

TABLE 3.2: Evaluation Model Series Matrix (Unit Construction Metal Cabinetry)				
Unit Model	Operating Dimensions w/ screw heads			Operating Weight (lbs)
	Width (in)	Length (in)	Height (in)	
(-)HPC - 036	78 3/8	46 3/4	41 3/8	528
(-)HPC - 048	78 3/8	46 3/4	41 3/8	551
(-)HPC - 060	78 3/8	46 3/4	41 3/8	553
(-)HPC - 072	78 3/8	46 3/4	41 3/8	553
(-)HPD - 090	89 5/16	59 1/2	49 1/4	786
(-)HPD - 102	89 5/16	59 1/2	49 1/4	822
(-)HPD - 120	89 5/16	59 1/2	59 7/10	874

Unit Model Note: '(-)' designates equivalent trade brands with similar cabinetry and may vary depending on brand

J. Unit Tie-Down

UNIT VIEWS & ELEVATIONS

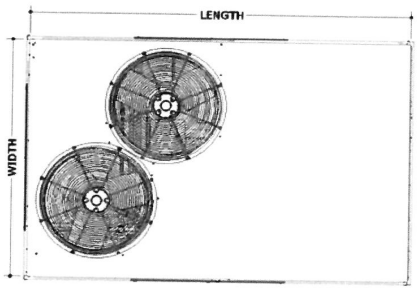

TOP VIEW

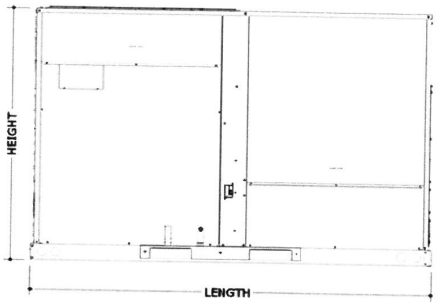

ELEVATION VIEW

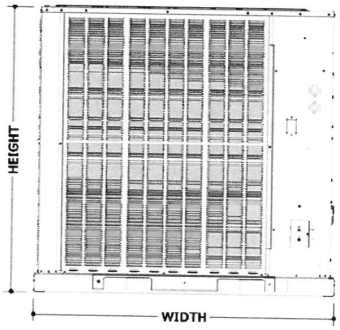

SIDE VIEW

Note: RGEDZR-150 illustration selected for dimensional purposes

R. INFORMATION FOR THE OWNER

R.1. Information for the Owner: Maintenance and service

For routine maintenance, general diagnostics for cooling and heating, and other generalized information regarding filter changing, cleaning the condensate pan, cleaning the coils, and general inspections, refer to the included User's Information Manual for the owner.

Manufacturer Part number: 92-106692-01

R.2. Product Model and Serial Number

The product model and serial number are both located on the rating plate found on the supply/return panel of the unit. Refer to section ***B.1. Model Number*** for the breakdown of each character in the model number.

R.3. Warranty Information

The below image of the warranty card is for **REFERENCE ONLY.** The warranty card for the unit will come separately in the parts bag.

Limited Warranty -- Parts

SCOPE of WARRANTY and EQUIPMENT COVERED: The products covered by this Limited Warranty are specified below (the "Covered Equipment"). RHEEM SALES COMPANY, INC. AIR CONDITIONING DIVISION (Manufacturer of Rheem®-, Ruud®-, Sure Comfort®-, WeatherKing®- Mainline®-, Fujitsu®- and Climate Master-branded Covered Equipment), warrants the Covered Equipment to be free from defects in materials and workmanship, and will repair or replace, at its option, ANY PART of Covered Equipment installed in residential or commercial applications which fails in normal use and service within the Applicable Warranty Periods specified below in accordance with the terms, including, but not limited to, the specific exclusions set forth below, of this Limited Warranty and subject to the Manufacturer's right to inspect and validate the warranty claim as set forth below. None of the residential application warranties apply to WeatherKing®-branded Covered Equipment. If an exact replacement is not available, an equivalent unit or credit will be provided at the Manufacturer's option. The exact replacement will be warranted for only the unexpired portion of the original Applicable Warranty Period. If government regulations, industry certification or similar standards require the replacement unit to have features not found in the defective unit, you will be charged for the difference in price represented by those required features. If you pay the price difference for those required features you will also receive a complete new Limited Warranty (with the full Applicable Warranty Period) for the new replacement unit. The Manufacturer does not authorize or warranty any online/internet sale of equipment through auction websites or, unless expressly authorized by written policy of Manufacturer, any other method of online sales direct to the consumer.

THE EFFECTIVE DATE OF WARRANTY COVERAGE IS DETERMINED AS FOLLOWS: (a) If the original installation date can be verified by the installer's invoice, then the Effective Date of warranty coverage is the original installation date as shown on the installer's invoice. **For residential new construction installations, the final occupancy permit, or proof of purchase from the builder can be substituted for the installer's invoice.**

(b) If the original installation date cannot be verified by the installer's invoice, **or proof of purchase in residential new construction applications,** then the Effective Date of warranty coverage is the product's manufacture date plus ninety (90) days.

The Applicable Warranty Periods for the Manufacturer's various models and parts are specified below.

APPLICABLE WARRANTY PERIODS:

A Ten (10) year Limited Parts Warranty applies to the following Manufacturer's single-phase heating and cooling models and component parts installed in RESIDENTIAL* applications (a FIVE year Limited Warranty applies to COMMERCIAL applications) except for certain models, heat exchangers, compressors, installation locations and non-matching coils whose Applicable Warranty Periods are listed below under "Exceptions".

Package Gas Electric Units: RGEA16

A Five (5) year Limited Warranty applies to the following Manufacturer's single-phase heating and cooling models and component parts installed in RESIDENTIAL* (not commercial) applications except for certain models, heat exchangers, compressors, installation locations and non-matching coils whose applicable Warranty Periods are listed below under "Exceptions".

Package Gas Electric Units: RKPN, RKQN, RGEA14, RGEA15, RGECZR, RGECZT
Package Heat Pumps: RJPL, RQPL, RQPM, RQRM
Package Air Conditioners: RLPN, RLQN, RSPM, RACA13, RACA14, RACA15, A One (1) year Limited Warranty applies to the following Manufacturer's single-phase and three-phase heating and cooling models and components installed in COMMERCIAL applications except for certain models, heat exchangers, compressors, installation locations and non-matching coils whose applicable Warranty Periods are listed below under "Exceptions".
Commercial Coils: RCCL, RCCU
Integrated Systems: RLHL, RKHL
Package Dual Fuel: RQPW
Package Gas Electric Units: RKPN, RKQN, RKKL, RKKN, RKNL, RKRL, RKRL-C, RGEA14, RGEA15, RGEA16, RGEDZT, RGEDZS, RGECZR, RGECZT
Package Air Conditioners: RLPN, RLQN, RLKL, RLKN, RLNL, RLRL, RSPM, RACA13, RACA14, RACA15, RACDZT, RACDZS, RACDZR
Package Heat Pumps: RJNL, RJPL, RQPL, RQPM, RQRM, RHPDZT, RHPDZS
Split-System Condensing Units: RAWL
Split-System Heat Pumps: RPWL
Electric Furnace/Air Handlers: RHGL, RHGM, RHGN

EXCEPTIONS:

COMPRESSORS:

TEN (10) YEARS: Only for models: RJNL, RJPL, RKPN, RKQN, RKNL, RKRL, RLNL, RLPN, RLQN, RQPL, RQPM, RQPW, RQRM, RSPM, RACA13, RACA14, RACA15, RGEA14, RGEA15, RGEA16, RGECZR, RGECZT. The Applicable Warranty Period is TEN (10) YEARS after the Effective Date for compressors in all single and three-phase products installed in residential* applications.

For any subsequent owner (or the Original Owner where the above 10 Year Compressor Limited Warranty conditions are not met or cease being met), or if the unit is installed for non-residential use, the Manufacturer's Limited Warranty on the compressor is for an Applicable Warranty Period of FIVE (5) YEARS after the Effective Date.

FIVE (5) YEARS: The Applicable Warranty Period is FIVE (5) YEARS after the Effective Date for compressors in all single and three-phase products installed in commercial applications.

PARTS:

CONDITIONAL TEN (10) YEAR PARTS WARRANTY: Only for models: RJPL, RKPN, RKQN, RLPN, RLQN, RSPM, RQPL, RQPM, RQPW, RQRM, RACA13, RACA14, RACA15, RGEA14, RGEA15, RGECZR, RGECZT. A Conditional Parts Warranty of TEN (10) YEARS after the Effective Date applies if the following conditions are satisfied:

a) The unit is installed in a residential* application, is still owned by the original purchaser, in the original installation; AND
b) Warranty is registered with the Manufacturer within 90 days of original installation or closing of the purchase of your residence. Product registration is available online at www.RegisterMyUnit.com. Please refer to the Limited Warranty Coverage and Exclusions on this warranty card for additional information.

HEAT EXCHANGERS:

TEN (10) YEARS: The Applicable Warranty Period is TEN (10) YEARS after the Effective Date. If the factory standard heat exchanger fails during the Applicable Warranty Period, the Manufacturer will furnish a replacement factory standard heat exchanger. If a replacement is not available for any reason, the Manufacturer shall have the right instead to allow a credit in the amount of the distributor cost for an equivalent heat exchanger when applied to the purchase of any other unit from the Manufacturer.

TWENTY (20) YEARS: The Applicable Warranty Period is TWENTY (20) YEARS after the Effective Date on stainless steel heat exchangers when installed in a commercial application only for Models: RKHL, RKPN, RKQN, RKKL, RKKN, RKNL, RKRL, RQPW, RGEA14, RGEA15, RGEA16, RGEDZT, RGEDZS, RGECZR, RGECZT.

CONDITIONAL LIFETIME LIMITED WARRANTY: Only for Models: RKPN, RKQN, RGEA14 (AJA or JHA option code), RGEA15 (AJA or JHA option code), RGEA16, RQPW. The Manufacturer warrants to the original purchaser for his or her lifetime the primary stainless steel heat exchanger when installed in a residential application, provided that the unit is installed and used in the original purchaser's principal residence, subject to proof of purchase and such installation, AND if the following additional conditions are satisfied:

a) The unit is installed in a residential* application, is still owned by the original purchaser, in the original installation; AND
b) Warranty is registered with the Manufacturer within 90 days of original installation or closing of the purchase of your residence. Product registration is available online at www.RegisterMyUnit.com. Please refer to the Limited Warranty Coverage and Exclusions on this warranty card for additional information.

For any subsequent owner (or the original purchaser where the above lifetime Limited Warranty conditions are not met or cease being met), or if the unit is installed for non-residential use, the Manufacturer's warranty on the primary stainless steel heat exchanger is for an Applicable Warranty Period of TWENTY (20) YEARS after the Effective Date.

EXCLUSIONS – In addition to the specific exclusions set forth in the other sections of this Limited Warranty document, THIS Limited Warranty WILL NOT APPLY TO:

a) damages, malfunctions, or failures resulting from failure to properly install, operate or maintain Covered Equipment in accordance with the Manufacturer's instructions;
b) damages, malfunctions, or failures caused by misuse, abuse, accident, contaminated or corrosive atmosphere, vandalism, freight damage, fire, flood, freeze, lightning, acts of war, acts of God and the like;
c) damages, malfunctions, or failures caused by improper conversion from natural gas to LP gas or LP gas to natural gas fuel source;
d) parts installed with Covered Equipment or used in connection with normal maintenance, such as cleaning or replacing air filters, refrigerant, thermostats, tubing, or concrete pads;
e) Covered Equipment which is not installed in the United States or Canada;
f) Covered Equipment which is not installed by a qualified, trained HVAC professional in accordance with applicable codes, ordinances and good trade practices;
g) damages, malfunctions, or failures caused by the use of any attachment, accessory or component not authorized by the Manufacturer;
h) Covered Equipment moved from the original installation location;
i) Covered Equipment when operated with system components (indoor unit, outdoor unit, coil and refrigerant control devices) or accessories which do not match or meet the specifications recommended by the Manufacturer;
j) any Covered Equipment manufactured by the Manufacturer that has been sold to the consumer via the internet or auction website, and has not been installed by a trained, qualified HVAC professional;
k) Covered condensing units that are not part of a properly matched system as specified by the Air Conditioning, Heating & Refrigeration Institute (AHRI);
l) Covered heat pumps that are not part of a properly matched system as specified by the Air Conditioning, Heating & Refrigeration Institute (AHRI).

KEEP THIS WARRANTY FOR YOUR RECORDS DO NOT MAIL!

R.3. Warranty Information

Limited Warranty – Parts

SCOPE of WARRANTY and EQUIPMENT COVERED: The products covered by this Limited Warranty are specified below (the "Covered Equipment"). RHEEM SALES COMPANY, INC. AIR CONDITIONING DIVISION (Manufacturer of Rheem®-, Ruud®-, Sure Comfort®-, WeatherKing®- Mainline®-, Fujitsu®- and Climate Master-branded Covered Equipment), warrants the Covered Equipment to be free from defects in materials and workmanship, and will repair or replace, at its option, ANY PART of Covered Equipment installed in residential or commercial applications which fails in normal use and service within the Applicable Warranty Periods specified below in accordance with the terms, including, but not limited to, the specific exclusions set forth below, of this Limited Warranty and subject to the Manufacturer's right to inspect and validate the warranty claim as set forth below. None of the residential application warranties apply to WeatherKing®-branded Covered Equipment. If an exact replacement is not available, an equivalent unit or credit will be provided at the Manufacturer's option. The exact replacement will be warranted for only the unexpired portion of the original Applicable Warranty Period. If government regulations, industry certification or similar standards require the replacement unit to have features not found in the defective unit, you will be charged for the difference in price represented by those required features. If you pay the price difference for those required features you will also receive a complete new Limited Warranty (with the full Applicable Warranty Period) for the new replacement unit. The Manufacturer does not authorize or warranty any online/internet sale of equipment through auction websites or, unless expressly authorized by written policy of Manufacturer, any other method of online sales direct to the consumer.

THE EFFECTIVE DATE OF WARRANTY COVERAGE IS DETERMINED AS FOLLOWS: (a) If the original installation date can be verified by the installer's invoice, then the Effective Date of warranty coverage is the original installation date as shown on the installer's invoice. **For residential new construction installations, the final occupancy permit, or proof of purchase from the builder can be substituted for the installer's invoice.**

(b) If the original installation date cannot be verified by the installer's invoice, **or proof of purchase in residential new construction applications,** then the Effective Date of warranty coverage is the product's manufacture date plus ninety (90) days.

The Applicable Warranty Periods for the Manufacturer's various models and parts are specified below.

APPLICABLE WARRANTY PERIODS:

A Ten (10) year Limited Parts Warranty applies to the following Manufacturer's single-phase heating and cooling models and component parts installed in RESIDENTIAL* applications (a FIVE year Limited Warranty applies to COMMERCIAL applications) except for certain models, heat exchangers, compressors, installation locations and non-matching coils whose Applicable Warranty Periods are listed below under "Exceptions".

Package Gas Electric Units: RGEA16

A Five (5) year Limited Warranty applies to the following Manufacturer's single-phase heating and cooling models and component parts installed in RESIDENTIAL* (not commercial) applications except for certain models, heat exchangers, compressors, installation locations and non-matching coils whose applicable Warranty Periods are listed below under "Exceptions".

Package Gas Electric Units: RKPN, RKQN, RGEA14, RGEA15, RGECZR, RGECZT
Package Heat Pumps: RJPL, RQPL, RQPM, RQRM
Package Air Conditioners: RLPN, RLQN, RSPM, RACA13, RACA14, RACA15, A One (1) year Limited Warranty applies to the following Manufacturer's single-phase and three-phase heating and cooling models and components installed in COMMERCIAL applications except for certain models, heat exchangers, compressors, installation locations and non-matching coils whose applicable Warranty Periods are listed below under "Exceptions".
Commercial Coils: RCCL, RCCU
Integrated Systems: RLHL, RKHL
Package Dual Fuel: RQPW
Package Gas Electric Units: RKPN, RKQN, RKKL, RKKN, RKNL, RKRL, RKRL-C, RGEA14, RGEA15, RGEA16, RGEDZT, RGEDZS, RGECZR, RGECZT
Package Air Conditioners: RLPN, RLQN, RLKL, RLKN, RLNL, RLRL, RSPM, RACA13, RACA14, RACA15, RACDZT, RACDZS, RACDZR
Package Heat Pumps: RJNL, RJPL, RQPL, RQPM, RQRM, RHPDZT, RHPDZS
Split-System Condensing Units: RAWL
Split-System Heat Pumps: RPWL
Electric Furnace/Air Handlers: RHGL, RHGM, RHGN

EXCEPTIONS:

COMPRESSORS:
TEN (10) YEARS: Only for models: RJNL, RJPL, RKPN, RKQN, RKNL, RKRL, RLNL, RLPN, RLQN, RQPL, RQPM, RQPW, RQRM, RSPM, RACA13, RACA14, RACA15, RGEA14, RGEA15, RGEA16, RGECZR, RGECZT. The Applicable Warranty Period is TEN (10) YEARS after the Effective Date for compressors in all single and three-phase products installed in residential* applications.
For any subsequent owner (or the Original Owner where the above 10 Year Compressor Limited Warranty conditions are not met or cease being met), or if the unit is installed for non-residential use, the Manufacturer's Limited Warranty on the compressor is for an Applicable Warranty Period of FIVE (5) YEARS after the Effective Date.

FIVE (5) YEARS: The Applicable Warranty Period is FIVE (5) YEARS after the Effective Date for compressors in all single and three-phase products installed in commercial applications.

PARTS:
CONDITIONAL TEN (10) YEAR PARTS WARRANTY: Only for models: RJPL, RKPN, RKQN, RLPN, RLQN, RSPM, RQPL, RQPM, RQPW, RQRM, RACA13, RACA14, RACA15, RGEA14, RGEA15, RGECZR, RGECZT. A Conditional Parts Warranty of TEN (10) YEARS after the Effective Date applies if the following conditions are satisfied:

a) The unit is installed in a residential* application, is still owned by the original purchaser, in the original installation; AND
b) Warranty is registered with the Manufacturer within 90 days of original installation or closing of the purchase of your residence. Product registration is available online at www.RegisterMyUnit.com. Please refer to the Limited Warranty Coverage and Exclusions on this warranty card for additional information.

HEAT EXCHANGERS:
TEN (10) YEARS: The Applicable Warranty Period is TEN (10) YEARS after the Effective Date. If the factory standard heat exchanger fails during the Applicable Warranty Period, the Manufacturer will furnish a replacement factory standard heat exchanger. If a replacement is not available for any reason, the Manufacturer shall have the right instead to allow a credit in the amount of the distributor cost for an equivalent heat exchanger when applied to the purchase of any other unit from the Manufacturer.

TWENTY (20) YEARS: The Applicable Warranty Period is TWENTY (20) YEARS after the Effective Date on stainless steel heat exchangers when installed in a commercial application only for Models: RKHL, RKPN, RKQN, RKKL, RKKN, RKNL, RKRL, RQPW, RGEA14, RGEA15, RGEA16, RGEDZT, RGEDZS, RGECZR, RGECZT.

CONDITIONAL LIFETIME LIMITED WARRANTY: Only for Models: RKPN, RKQN, RGEA14 (AJA or JHA option code), RGEA15 (AJA or JHA option code), RGEA16, RQPW. The Manufacturer warrants to the original purchaser for his or her lifetime the primary stainless steel heat exchanger when installed in a residential application, provided that the unit is installed and used in the original purchaser's principal residence, subject to proof of purchase and such installation, AND if the following additional conditions are satisfied:

a) The unit is installed in a residential* application, is still owned by the original purchaser, in the original installation; AND
b) Warranty is registered with the Manufacturer within 90 days of original installation or closing of the purchase of your residence. Product registration is available online at www.RegisterMyUnit.com. Please refer to the Limited Warranty Coverage and Exclusions on this warranty card for additional information.

For any subsequent owner (or the original purchaser where the above lifetime Limited Warranty conditions are not met or cease being met), or if the unit is installed for non-residential use, the Manufacturer's warranty on the primary stainless steel heat exchanger is for an Applicable Warranty Period of TWENTY (20) YEARS after the Effective Date.

EXCLUSIONS – In addition to the specific exclusions set forth in the other sections of this Limited Warranty document, THIS Limited Warranty WILL NOT APPLY TO:

a) damages, malfunctions, or failures resulting from failure to properly install, operate or maintain Covered Equipment in accordance with the Manufacturer's instructions;
b) damages, malfunctions, or failures caused by misuse, abuse, accident, contaminated or corrosive atmosphere, vandalism, freight damage, fire, flood, freeze, lightning, acts of war, acts of God and the like;
c) damages, malfunctions, or failures caused by improper conversion from natural gas to LP gas or LP gas to natural gas fuel source;
d) parts installed with Covered Equipment or used in connection with normal maintenance, such as cleaning or replacing air filters, refrigerant, thermostats, tubing, or concrete pads;
e) Covered Equipment which is not installed in the United States or Canada;
f) Covered Equipment which is not installed by a qualified, trained HVAC professional in accordance with applicable codes, ordinances and good trade practices;
g) damages, malfunctions, or failures caused by the use of any attachment, accessory or component not authorized by the Manufacturer;
h) Covered Equipment moved from the original installation location;
i) Covered Equipment when operated with system components (indoor unit, outdoor unit, coil and refrigerant control devices) or accessories which do not match or meet the specifications recommended by the Manufacturer;
j) any Covered Equipment manufactured by the Manufacturer that has been sold to the consumer via the internet or auction website, and has not been installed by a trained, qualified HVAC professional;
k) Covered condensing units that are not part of a properly matched system as specified by the Air Conditioning, Heating & Refrigeration Institute (AHRI);
l) Covered heat pumps that are not part of a properly matched system as specified by the Air Conditioning, Heating & Refrigeration Institute (AHRI).

KEEP THIS WARRANTY FOR YOUR RECORDS DO NOT MAIL!

S. INSTALLATION CHECK LIST AND JOB SITE SHEET

Commercial Job Site Information

Site Information and Application Details:

Business Name : _____

Address : _____

City : _____ State : _____ Zip : _____

Site Contact : _____

Phone : _____ Mobile : _____

Email : _____

Model Number : _____
(Please include all letters and digits of the model number)

Serial Number : _____
(Please include all letters and digits of the serial number)

Date of Install : _____
(When was the unit installed, month, day, and year)

Dealer/Contractor Information:

Business Name : _____

Address : _____

City : _____ State : _____ Zip : _____

Site Contact : _____

Phone : _____ Mobile : _____

Email : _____

Technician Name : _____

Visit Date: _____

Technician Name : _____

Visit Date: _____

Technician Name : _____

Visit Date: _____

Distributor and Support Details:

Distributor Name : _____

City : _____ State : _____

Rep Name : _____

Visit Date: _____

Unit Setup and Operational Information

Voltage and Amperage Information :

Line Voltage Measurements :

Base Voltage : 208 240 460 (Circle one)

Phase : 1 3 (Circle one)

Measured Line Voltage :

Phase A to B : _____ Phase A to Ground : _____

Phase B to C : _____ Phase B to Ground : _____

Phase C to A : _____ Phase C to Ground : _____

Breaker Size : _____ Conductor Size: _____

24VAC Low Voltage Measurements :

Transformer Tap : 208 240 460 (Circle one)

24VAC Measured Voltage : R to C : _____

24VAC Measured Amp Load :

Transformer Load: _____

T-stat Load: _____

Amperage and Power Measurements :

	Full Running Load	Blower	Compressor 1	Compressor 2	Outdoor Fans
Phase A :					
Phase B :					
Phase C :					

Refrigerant Circuit Information :

Circuit 1 :

Suction Line	Liquid Line
Pressure (PSI) :	Pressure (PSI) :
Temperature (°F) :	Temperature (°F) :
Superheat (°F) :	Sub-cooling (°F) :

Circuit 2 :

Suction Line	Liquid Line
Pressure (PSI) :	Pressure (PSI) :
Temperature (°F) :	Temperature (°F) :
Sub-cooling (°F) :	Sub-cooling (°F) :

Outdoor Air Temperature (°F) : _____ Return Air Temperature (°F) : _____ Supply Air Temperature (°F) : _____

Outdoor Air Wet Bulb (°F) : _____ Return Air Wet Bulb (°F) : _____ Supply Air Wet Bulb (°F) : _____

S. INSTALLATION CHECK LIST AND JOB SITE SHEET

Commercial Job Site Information

Site Information and Application Details:

Business Name : _____

Address : _____

City : _____ State : _____ Zip : _____

Site Contact : _____

Phone : _____ Mobile : _____

Email : _____

Model Number : _____
(Please include all letters and digits of the model number)

Serial Number : _____
(Please include all letters and digits of the serial number)

Date of Install : _____
(When was the unit installed, month, day, and year)

Dealer/Contractor Information:

Business Name : _____

Address : _____

City : _____ State : _____ Zip : _____

Site Contact : _____

Phone : _____ Mobile : _____

Email : _____

Technician Name : _____
Visit Date: _____
Technician Name : _____
Visit Date: _____
Technician Name : _____
Visit Date: _____

Distributor and Support Details:

Distributor Name : _____

City : _____ State : _____

Rep Name : _____

Visit Date: _____

Unit Setup and Operational Information

Voltage and Amperage Information :

Line Voltage Measurements :

Base Voltage : 208 240 460 (Circle one) Phase : 1 3 (Circle one)

Measured Line Voltage :

Phase A to B : _____ Phase A to Ground : _____

Phase B to C : _____ Phase B to Ground : _____

Phase C to A : _____ Phase C to Ground : _____

Breaker Size : _____ Conductor Size: _____

24VAC Low Voltage Measurements :

Transformer Tap : 208 240 460 (Circle one)

24VAC Measured Voltage : R to C : _____

24VAC Measured Amp Load :

Transformer Load: _____

T-stat Load: _____

Amperage and Power Measurements :

	Full Running Load	Blower	Compressor 1	Compressor 2	Outdoor Fans					
Phase A :										
Phase B :										
Phase C :										

Refrigerant Circuit Information :

Circuit 1 :

Suction Line	Liquid Line
Pressure (PSI) : _____	Pressure (PSI) : _____
Temperature (°F) : _____	Temperature (°F) : _____
Superheat (°F) : _____	Sub-cooling (°F) : _____

Circuit 2 :

Suction Line	Liquid Line
Pressure (PSI) : _____	Pressure (PSI) : _____
Temperature (°F) : _____	Temperature (°F) : _____
Sub-cooling (°F) : _____	Sub-cooling (°F) : _____

Outdoor Air Temperature (°F) : _____ Return Air Temperature (°F) : _____ Supply Air Temperature (°F) : _____

Outdoor Air Wet Bulb (°F) : _____ Return Air Wet Bulb (°F) : _____ Supply Air Wet Bulb (°F) : _____