SMITH® JAY R. SMITH MFG. CO.®
CUSTOMER DRIVEN
DIVISION OF SMITH INDUSTRIES, INC.
POST OFFICE BOX 3237
MONTGOMERY, ALABAMA 36109-0237 (USA)
TEL: 334-277-8520 FAX: 334-272-7396 www.jrsmith.com

MEMBER OF:

LOCATION

SANI-CEPTOR® ACID RESISTANT COATED FLOOR & INDIRECT WASTE DRAINS

SQUARE NICKEL BRONZE TOP
16 1/2" (420) TOP - EXTRA DEEP RECEPTORS

FUNCTION: Used in kitchens, schools, laundries and other commercial installations where a large volume of waste is anticipated and the ultimate in sanitation is desirable.

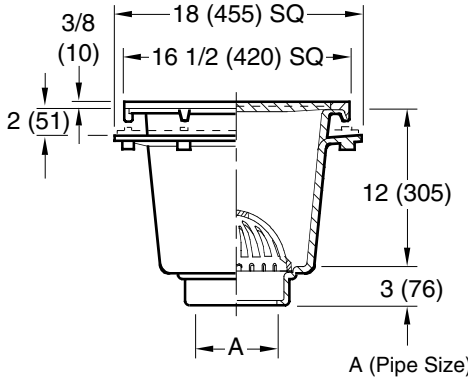

WITH DOME BOTTOM STRAINER

Free Area
77 SQ IN
(497) SQ CM

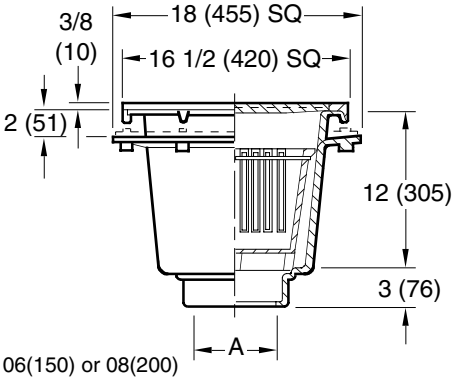

WITH SEDIMENT BUCKET

A (Pipe Size) = 02(50), 03(80), 04(100), 05(125), 06(150) or 08(200)

☐ **Fig. 3200C . . . . CAULK OUTLET . . . . . Fig. 3201C** ☐
☐ **Fig. 3200Y . . . . .NO-HUB OUTLET . . . . .Fig. 3201Y** ☐

FEATURES, OPTIONS & ORDERING INFORMATION

REGULARLY FURNISHED: Cast Iron Flanged Receptor with Seepage Holes, Acid Resistant Coated Interior, Nickel Bronze Rim and Secured Grate. Aluminum Dome Bottom Strainer or Sediment Bucket as Indicated by Figure Number.

VARIATIONS:
- ☐ Aluminum Flat Bottom Strainer -FBS
- ☐ Flashing Clamp -C
- ☐ Polished Aluminum Dome Bottom Strainer -PDBS
- ☐ Vandal Proof Screws -U

OPTIONAL MATERIALS:
- ☐ All Duco Cast Iron Receptor -CI
- ☐ All Galvanized Receptor -G

NOTE: Dimensions shown in parentheses are in millimeters.

SUFFIX NUMBER SQUARE RIM	DESCRIPTION
-10	Less NB Rim and Grate
-11	Less Grate w/NB Rim
-12	With NB Rim and 1/2 Grate
-13	With NB Rim and 3/4 Grate
-14	With NB Rim and Grate with 7" (180) SQ Center Hole
-21	With NB Rim and Grate with 4" (100) DIA NB Funnel
-22	With NB Rim and Grate with 6" (150) DIA NB Funnel
-25	With NB Rim and Grate with 8 1/4(210) x 3 1/4(83) x 4 1/2"(115) High Oval NB Funnel
-26	With NB Rim and Grate with 6(150) x 2 1/2(64) x 1"(25) High Oval NB Funnel
-41	With NB Rim and Solid Cover
-42	With NB Rim and 1/2 Solid Cover
-43	With NB Rim and 3/4 Solid Cover
-44	With NB Rim and Solid Cover with 2 1/2" (64) DIA Center Hole

REV.	DATE	DESCRIPTION	BY	CKD. BY
K	10-1-03	Rev Variations	TBW	BW
J	4-8-96	Rev Rim Description	EMB	BS
H	2-8-96	Revised	EMB	BS
G	6-27-95	Added Millimeters	EMB	BS

WEIGHT POUNDS | VOLUME CUBIC FEET

FIGURE NUMBER **3200, 3201**

K | DRAWING NUMBER S3200 | SIZE A | SCALE: NONE | DATE: 9-19-85 | APPROVED BY: SJM | CHECKED BY: JD | DRAWN BY: CM | FIGURE NUMBER 3200, 3201

WE CAN ASSUME NO RESPONSIBILITY FOR USE OF SUPERSEDED OR VOID DATA
DIMENSIONS ARE SUBJECT TO MANUFACTURERS TOLERANCE AND CHANGE WITHOUT NOTICE