MOEN

Buy it for looks. Buy it for life.®

Specifications

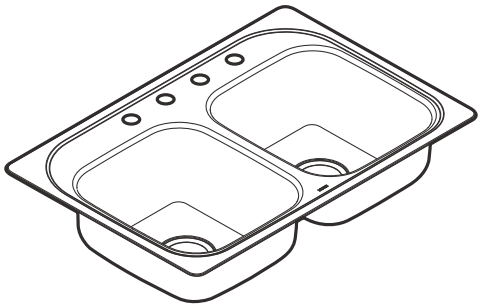

Model Number	Faucet Holes	Depth-Inches	Drain Placement	Quantity	Model Specified
G222171	1	6.5	Center	1	
G222173	3	6.5	Center	1	
G222174	4	6.5	Center	1	
BG222173	3	6.5	Center	25	
BG222174	4	6.5	Center	25	
G222171B	1	6.5	Rear	1	
G222173B	3	6.5	Rear	1	
G222174B	4	6.5	Rear	1	
G222154	4	7	Center	1	

SINK DESCRIPTION

- 2200 Series double bowl drop-in sink
- 22 gauge stainless steel, Matte finish
- Center or rear drain, 1 to 4 faucet holes as indicated
- Integrated mounting system, hardware included
- Hardware can accomodate up to 1-1/8" counter thickness
- Includes SoundShield sound absorbing system

CUT OUT DIMENSIONS

- 32 3/8" x 21 3/8" with 3/8" corner radius. Tolerance of plus or minus 1/16" is acceptable

STANDARDS

- Third party certified by IAPMO to meet ASME A112.19.3 and all applicable specifications referenced therein
- Rear drain configurations compliant with ADA installation requirements

WARRANTY

- Limited lifetime warranty against material or manufacturing defects to the original consumer purchaser

Faucet Hole Configurations

1-3/8" (35mm) diameter faucet holes
4" (102mm) Center

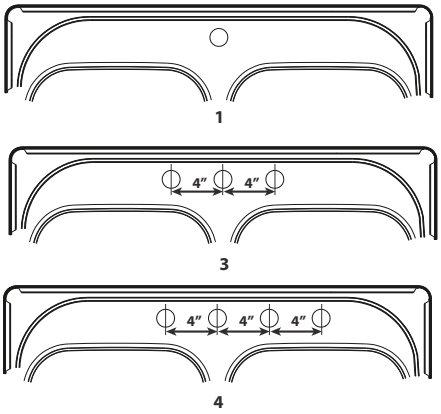

Rear Drain Configuration

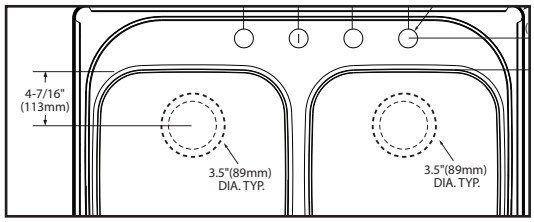

CRITICAL DIMENSIONS

(DO NOT SCALE)

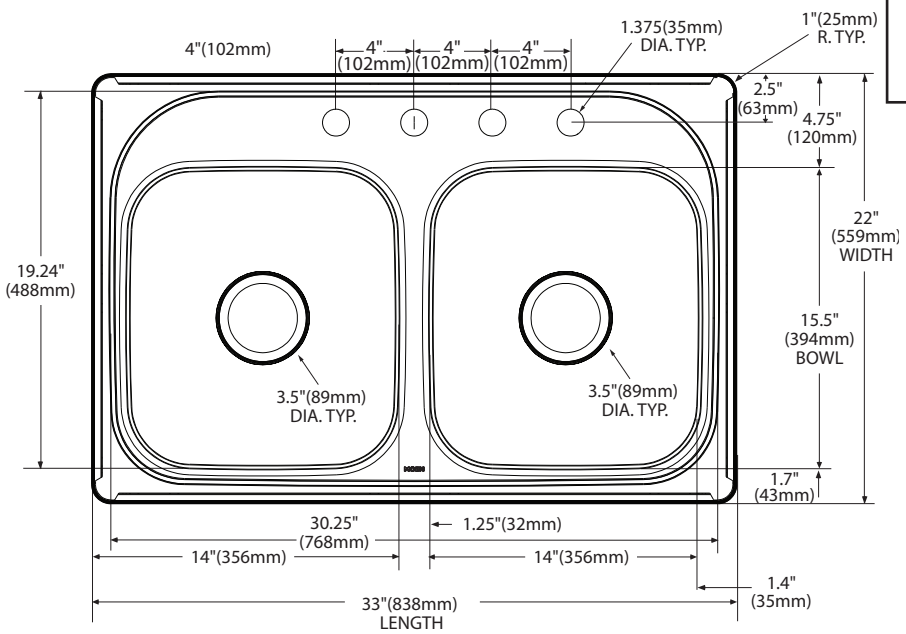

MADE IN THE USA

Installation Detail

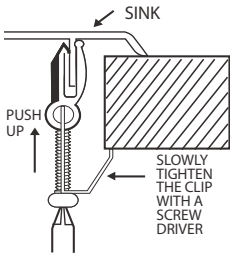

Rev. 2/14

FOR MORE INFORMATION CALL: 1-800-BUY-MOEN
www.moen.com

07/17/2014 SPC13853 500001460R1
Released 01