MOEN

Buy it for looks. Buy it for life.®

Specifications

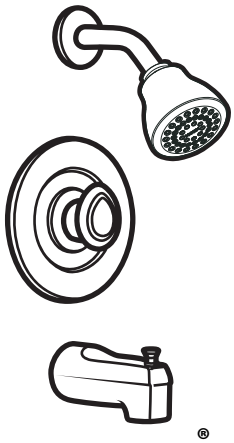

CHATEAU®
Single-Handle Tub/Shower Trim Kit

Models: T471, T471EP
(Bulk Packed 12 per carton)

DESCRIPTION
- Chrome plated metal construction
- Includes showerhead, arm, flange and a slip fit diverter tub spout

OPERATION
- Acrylic knob style handle
- Pull-on/push-off design
- Allows control of both temperature selection and volume with a single handle

FLOW
- Showerhead is limited to 2.5 gpm (9.5L/min) max.
- EP suffix models are limited to 1.75 gpm (6.6 L/min.) at 80 psi

CARTRIDGE
- 1225 cartridge design
- Nonmetallic/nonferrous and stainless steel materials
- Accommodates back to back installations

STANDARDS
- Third party certified to ASME A112.18.1/CSA B-125-1, and all applicable requirements referenced therein

WARRANTY
- Lifetime limited warranty against leaks, drips and finish defects to the original consumer purchaser
- 5 year warranty if used in commercial installations

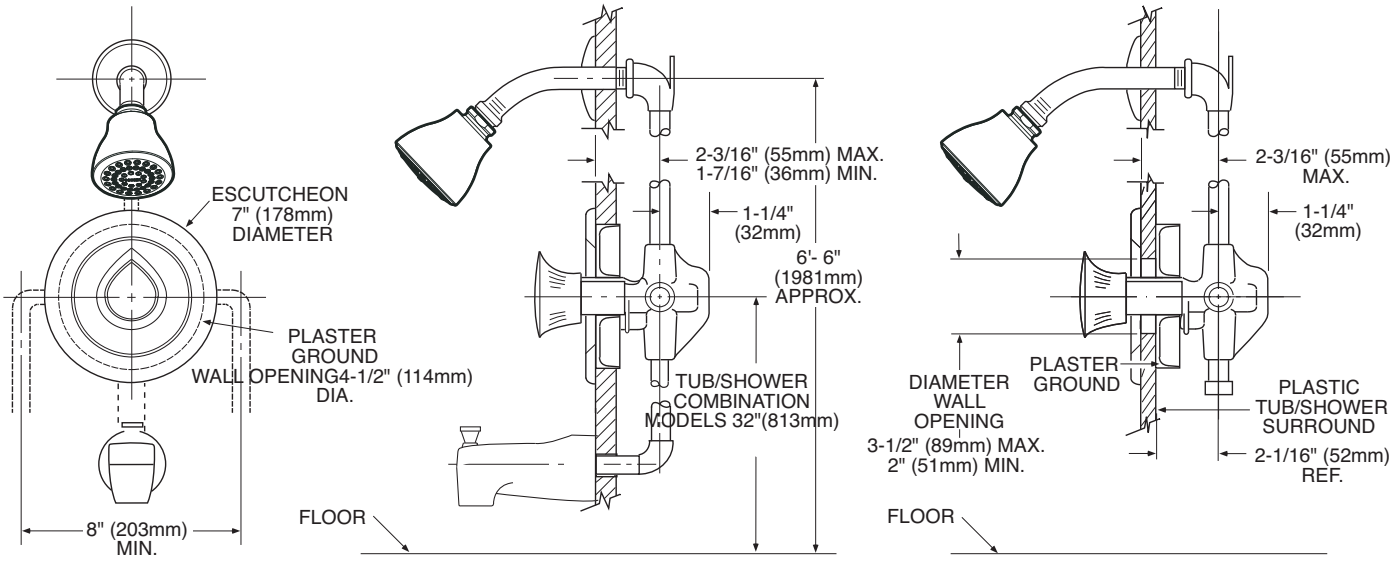

THICK WALL APPLICATION **THIN WALL APPLICATION**

CRITICAL DIMENSIONS

(DO NOT SCALE)

FOR MORE INFORMATION CALL: 1-800-BUY-MOEN
www.moen.com

Rev. 5/16

01CADTOS SPC120G 5000023690 Released 01