SPLIT TYPE
ROOM AIR CONDITIONER

Slim Duct / Compact Cassette
Compact Wall Mounted /
Wall Mounted / Floor

INVERTER MULTI

SERVICE INSTRUCTION

Models	Indoor unit	Outdoor unit
	ASU7RLF1 ASU9RLF1 ASU12RLF1 ASU15RLF1	AOU18RLXFZ AOU24RLXFZ AOU36RLXFZ
	ASUH07LPAS ASUH09LPAS ASUH12LPAS ASUH15LPAS	
	ASUH18LPAS ASUH24LPAS	
	ADUH07LUAS1 ADUH09LUAS1 ADUH12LUAS1	
	ADUH18LUAS1	
	ADUH24LUAS1	
	ACUH07LUAS1 ACUH09LUAS1 ACUH12LUAS1 ACUH18LUAS1 UTG-CCGFGA	
	AGU9RLF AGU12RLF AGU15RLF	

Refrigerant
R410A

FUJITSU GENERAL LIMITED

CONTENTS

1. DESCRIPTION OF EACH CONTROL OPERATION

1. CAPACITY CONTROL..... 01-01
2. AUTO CHANGEOVER OPERATION..... 01-01
3. INDOOR FAN CONTROL..... 01-03
4. LOUVER CONTROL..... 01-12
5. OUTDOOR FAN CONTROL..... 01-17
6. TIMER OPERATION CONTROL..... 01-18
7. COMPRESSOR CONTROL..... 01-21
8. ELECTRONIC EXPANSION VALVE CONTROL..... 01-22
9. TEST OPERATION CONTROL..... 01-22
10. PREVENT TO RESTART FOR 3 MINUTES (3 MINUTES ST)..... 01-22
11. 4-WAY VALVE EXTENSION SELECT..... 01-23
12. AUTO RESTART..... 01-23
13. MANUAL AUTO OPERATION..... 01-23
14. COMPRESSOR PREHEATING..... 01-24
15. POWERFUL OPERATION..... 01-24
16. MIN. HEAT OPERATIONEHEATING..... 01-24
17. ECONOMY OPERATION..... 01-24
18. FRESH AIR CONTROL..... 01-25
19. EXTERNAL ELECTRICAL HEATER CONTROL..... 01-25
20. DRAIN PUMP OPERATION..... 01-26
21. DEFROST OPERATION CONTROL..... 01-27
22. VARIOUS PROTECTIONS..... 01-30

2. TROUBLE SHOOTING

2-1 ERROR DISPLAY..... 02-01

2-1-1 INDOOR UNIT DISPLAY..... 02-01

2-1-2 WIRED REMOTE CONTROLLER DISPLAY..... 02-02

2-1-3 OUTDOOR UNIT DISPLAY..... 02-03

2-2 TROUBLE SHOOTING WITH ERROR CODE..... 02-04

2-3 TROUBLE SHOOTING WITH NO ERROR CODE..... 02-39

2-4 SERVICE PARTS INFORMATION..... 02-44

3. REPLACEMENT PARTS

Refrigerant
R410A

Slim Duct / Compact Cassette Compact Wall Mounted / Wall Mounted / Floor type

INVERTER (MULTI)

1 . DESCRIPTION OF EACH CONTROL OPERATION

1. CAPACITY CONTROL

1-1 COOLING, HEATING, DRY CAPACITY CONTROL

Compressor frequency decides by capacity of an indoor unit, operation number of an indoor unit, set temperature, room temperature and outside temperature.

2. AUTO CHANGEOVER OPERATION

When the air conditioner is set to the Auto mode by remote controller, operation starts in the optimum mode from among the Heating, Cooling, Dry and Monitoring mode. During operation, the optimum mode is automatically switched in accordance with temperature changes. The temperature can be set between 64°F(18°C) and 88°F(30°C) in 2°F(1°C) steps.

① When operation starts, indoor fan and outdoor fan are operated for around 3 minutes. Room temperature and outdoor temperature are sensed, and the operation mode is selected in accordance with the table below. **<Monitoring mode>**

(Table 1 : Operation mode selection table)

Room temperature (TR)	Operation mode
TR> Ts+4°F(+2°C)	Cooling (Autmatic dry)
Ts+4°F(+2°C) ≧ TR ≧ Ts -4°F(-2°C)	*Middle zone
TR < Ts -4°F(-2°C)	Heating

TR : Room temperature
Ts : Setting temperature

*If it's Middle zone, operation mode of indoor unit is selected as below.

(1). Same operation mode is selected as outdoor unit.
If outdoor unit is operating in Cooling, Dry, and Heating mode, indoor unit will be operated by the same operation mode.

(2). Selected by the outdoor temperature.
If outdoor unit is operating in other than Cooling, Dry, and Heating mode, indoor unit will be operated according to the outdoor temperature as below.

(Fig. 1 : Outdoor temperature zone selection)

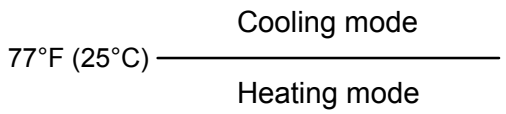

② When Cooling or Dry mode was selected at ① and air flow mode is Auto, the air conditioner operates as follow.
- The same operation as COOLING OPERATION AND DRY OPERATION.
- When the room temperature has remained at set temperature -3°F(-1.5°C), operation is automatically switched to Dry mode.
- If the room temperature reaches set temperature +4°F(+2°C) during Dry mode, operation returns to Cooling.

(Fig.2 : Auto changeover : Cooling - Dry)

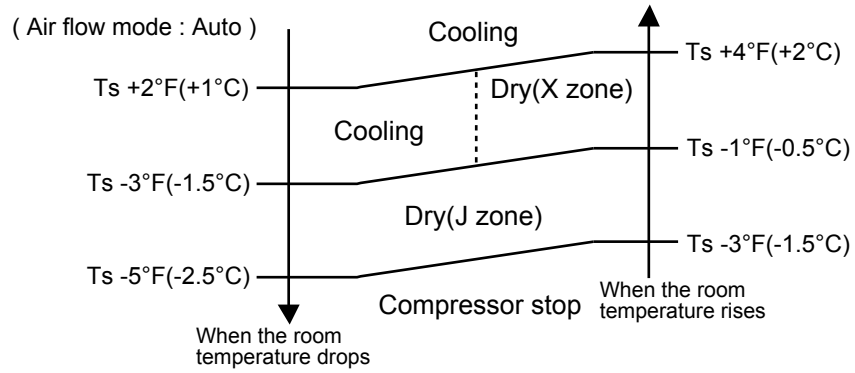

TR : Room temperature
Ts : Setting temperature

③ When Heating was selected at ①, the same operation as HEATING OPERATION of page 01-02 is performed.

④ When the compressor was stopped for 6 consecutive minutes by the temperature control function after the Cooling(Auto:Dry) or Heating mode was selected at ① above, operation is switched to Monitoring and the operation mode is selected again.

■ AUTO CHANGEOVER operation flow chart

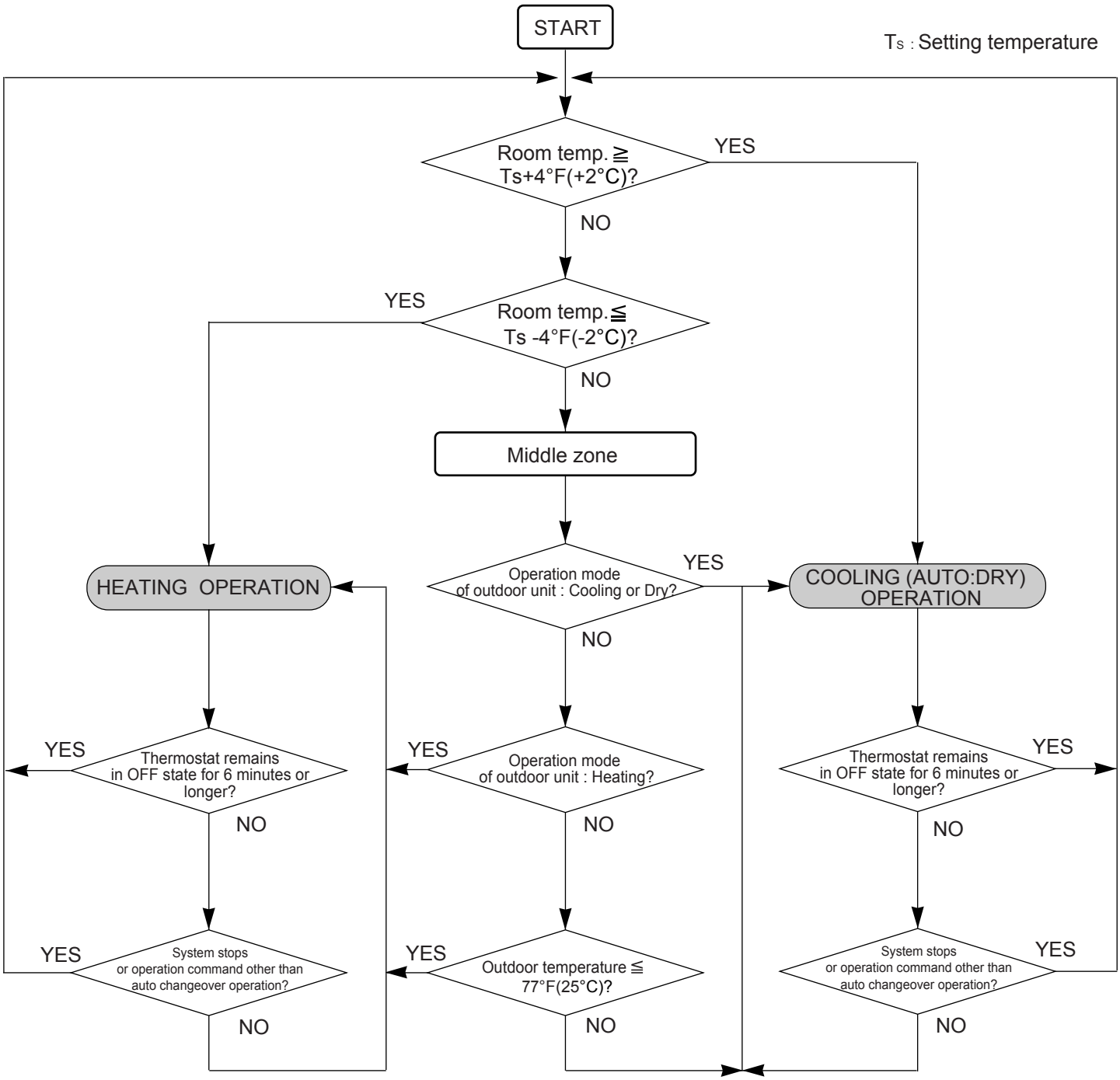

3. INDOOR FAN CONTROL

1. Fan speed

(Table2 : Indoor fan speed table)

ASU7RLF1 (rpm)

Operation mode	Air flow mode	Fan Speed
Heating	Poweful	1090
	Hi	1050
	Me+	1000
	Me	950
	Lo	850
	Quiet	710
	Cool Air Prevention	600
	S-Lo	480
Cooling / Fan	Poweful	1090
	Hi	1050
	Me	950
	Lo	850
	Quiet	680
	*Soft Quiet	600
	S-Lo	480
Dry	Auto	X, J zone:680

ASU9RLF1 (rpm)

Operation mode	Air flow mode	Fan Speed
Heating	Poweful	1140
	Hi	1090
	Me+	1040
	Me	980
	Lo	850
	Quiet	710
	Cool Air Prevention	600
	S-Lo	480
Cooling / Fan	Poweful	1140
	Hi	1090
	Me	980
	Lo	850
	Quiet	680
	*Soft Quiet	600
	S-Lo	480
Dry	Auto	X, J zone:680

ASU12RLF1 (rpm)

Operation mode	Air flow mode	Fan Speed
Heating	Poweful	1240
	Hi	1190
	Me+	1120
	Me	1050
	Lo	910
	Quiet	710
	Cool Air Prevention	600
	S-Lo	480
Cooling / Fan	Poweful	1240
	Hi	1190
	Me	1050
	Lo	880
	Quiet	680
	*Soft Quiet	600
	S-Lo	480
Dry	Auto	X, J zone:680

ASU15RLF1 (rpm)

Operation mode	Air flow mode	Fan Speed
Heating	Poweful	1320
	Hi	1280
	Me+	1190
	Me	1120
	Lo	1050
	Quiet	770
	Cool Air Prevention	600
	S-Lo	480
Cooling / Fan	Poweful	1320
	Hi	1280
	Me	1090
	Lo	1000
	Quiet	750
	*Soft Quiet	670
	S-Lo	480
Dry	Auto	X, J zone:750

*Note, during Economy operation and operation mode is Fan, air flow is 1 step downs.
(Hi > Me, Me > Lo, Quiet > Soft Quiet)

ASUH07LPTA (rpm)

Operation mode	Air flow mode	Fan Speed
Heating	Poweful	1200
	Hi	1130
	Me+	1040
	Me	950
	Lo	790
	Quiet	620
	Cool Air Prevention	550
	S-Lo	400
Cooling / Fan	Poweful	1110
	Hi	1040
	Me	890
	Lo	750
	Quiet	600
	*Soft Quiet	470
	S-Lo	400
Dry	Auto	X, J zone:600

ASUH09LPTA (rpm)

Operation mode	Air flow mode	Fan Speed
Heating	Poweful	1230
	Hi	1160
	Me+	1070
	Me	980
	Lo	800
	Quiet	620
	Cool Air Prevention	550
	S-Lo	400
Cooling / Fan	Poweful	1170
	Hi	1100
	Me	920
	Lo	750
	Quiet	600
	*Soft Quiet	470
	S-Lo	400
Dry	Auto	X, J zone:600

ASUH12LPTA (rpm)

Operation mode	Air flow mode	Fan Speed
Heating	Poweful	1290
	Hi	1220
	Me+	1140
	Me	1060
	Lo	900
	Quiet	630
	Cool Air Prevention	550
	S-Lo	470
Cooling / Fan	Poweful	1200
	Hi	1130
	Me	950
	Lo	790
	Quiet	630
	*Soft Quiet	490
	S-Lo	470
Dry	Auto	X, J zone:630

ASUH15LPTA (rpm)

Operation mode	Air flow mode	Fan Speed
Heating	Poweful	1330
	Hi	1260
	Me+	1160
	Me	1080
	Lo	900
	Quiet	670
	Cool Air Prevention	590
	S-Lo	470
Cooling / Fan	Poweful	1290
	Hi	1200
	Me	1000
	Lo	810
	Quiet	630
	*Soft Quiet	490
	S-Lo	470
Dry	Auto	X, J zone:630

*Note, during Economy operation and operation mode is Fan, air flow is 1 step downs.
(Hi > Me, Me > Lo, Quiet > Soft Quiet)

ASUH18LPTA (rpm)

Operation mode	Air flow mode	Fan Speed
Heating	Poweful	1310
	Hi	1210
	Me+	1130
	Me	1020
	Lo	860
	Quiet	700
	Cool Air Prevention	580
	S-Lo	540
Cooling / Fan	Poweful	1360
	Hi	1260
	Me	1140
	Lo	960
	Quiet	680
	*Soft Quiet	580
	S-Lo	540
Dry	Auto	X, J zone:680

ASUH24LPTA (rpm)

Operation mode	Air flow mode	Fan Speed
Heating	Poweful	1490
	Hi	1390
	Me+	1320
	Me	1210
	Lo	960
	Quiet	810
	Cool Air Prevention	680
	S-Lo	680
Cooling / Fan	Poweful	1590
	Hi	1490
	Me	1260
	Lo	1140
	Quiet	810
	*Soft Quiet	680
	S-Lo	540
Dry	Auto	X, J zone:810

*Note, during Economy operation and operation mode is Fan, air flow is 1 step downs.
(Hi > Me, Me > Lo, Quiet > Soft Quiet)

AGU9RLF (rpm)

Operation mode	Air flow mode		Speed	
			Upper & Lower air flow mode	Upper air flow mode
Heating	Powerful	(Upper/ Lower)	1230/ 1040	1300
	Hi		1120/ 950	1230
	Me		1000/ 850	1090
	Lo		860/ 730	940
	Quiet		660/ 560	750
	Cool air prevention		660/ 560	680
	S-Lo		660/ 560	680
Cooling/ Fan	Powerful	(Upper/ Lower)	1230/ 1040	1300
	Hi		1120/ 950	1230
	Me		960/ 820	1070
	Lo		820/ 700	910
	Quiet		660/ 560	750
	*Soft Quiet		570/ 480	680
	S-Lo		660/ 560	680
Dry	Auto	(Upper/ Lower)	---- / ----	X, J zone : 750

AGU12RLF (rpm)

Operation mode	Air flow mode		Speed	
			Upper & Lower air flow mode	Upper air flow mode
Heating	Powerful	(Upper/ Lower)	1350/ 1150	1370
	Hi		1240/ 1040	1300
	Me		1080/ 920	1140
	Lo		910/ 770	980
	Quiet		660/ 560	750
	Cool air prevention		660/ 560	680
	S-Lo		660/ 560	680
Cooling/ Fan	Powerful	(Upper/ Lower)	1350/ 1150	1370
	Hi		1240/ 1040	1300
	Me		1050/ 890	1120
	Lo		860/ 730	930
	Quiet		660/ 560	750
	*Soft Quiet		570/ 480	680
	S-Lo		660/ 560	680
Dry	Auto	(Upper/ Lower)	---- / ----	X, J zone : 750

AGU15RLF (rpm)

Operation mode	Air flow mode		Speed	
			Upper & Lower air flow mode	Upper air flow mode
Heating	Powerful	(Upper/ Lower)	1440/ 1230	1440
	Hi		1330/ 1120	1370
	Me		1140/ 970	1180
	Lo		940/ 800	1020
	Quiet		660/ 560	750
	Cool air prevention		660/ 560	680
	S-Lo		660/ 560	680
Cooling/ Fan	Powerful	(Upper/ Lower)	1440/ 1230	1440
	Hi		1330/ 1120	1370
	Me		1100/ 930	1160
	Lo		890/ 750	960
	Quiet		660/ 560	750
	*Soft Quiet		570/ 480	680
	S-Lo		660/ 560	680
Dry	Auto	(Upper/ Lower)	---- / ----	X, J zone : 750

*Note, during Economy operation and operation mode is Fan, air flow is 1 step downs.
(Hi > Me, Me > Lo, Quiet > Soft Quiet)

ACUH07LUAS1 (rpm)

Operation mode	Air flow mode	Fan Speed
Heating	Hi	590
	Me+	570
	Me	540
	Lo	490
	Quiet	440
	Cool Air Prevention	400
	S-Lo	300
Cooling / Fan	Hi	590
	Me	540
	Lo	490
	Quiet	440
	*Soft Quiet	400
	S-Lo	300
Dry	Auto	X, J zone : 440

ACUH09LUAS1 (rpm)

Operation mode	Air flow mode	Fan Speed
Heating	Hi	590
	Me+	570
	Me	540
	Lo	490
	Quiet	440
	Cool Air Prevention	400
	S-Lo	300
Cooling / Fan	Hi	590
	Me	540
	Lo	490
	Quiet	440
	*Soft Quiet	400
	S-Lo	300
Dry	Auto	X, J zone : 440

ACUH12LUAS1 (rpm)

Operation mode	Air flow mode	Fan Speed
Heating	Hi	650
	Me+	620
	Me	580
	Lo	520
	Quiet	460
	Cool Air Prevention	400
	S-Lo	300
Cooling / Fan	Hi	660
	Me	580
	Lo	520
	Quiet	460
	*Soft Quiet	400
	S-Lo	300
Dry	Auto	X, J zone : 460

ACUH18LUAS1 (rpm)

Operation mode	Air flow mode	Fan Speed
Heating	Hi	840
	Me+	800
	Me	750
	Lo	650
	Quiet	500
	Cool Air Prevention	400
	S-Lo	300
Cooling / Fan	Hi	790
	Me	660
	Lo	570
	Quiet	460
	*Soft Quiet	400
	S-Lo	300
Dry	Auto	X, J zone : 460

*Note, during Economy operation and operation mode is Fan, air flow is 1 step downs.
(Hi > Me, Me > Lo, Quiet > Soft Quiet)

ADUH07LUAS1 (Static pressure:12Pa) (rpm)

Operation mode	Air flow mode	Fan Speed
Heating	Hi	1160
	Me+	1000
	Me	1000
	Lo	940
	Quiet	880
	S-Lo	500
Cooling / Fan	Hi	1160
	Me	1000
	Lo	940
	Quiet	880
	*Soft Quiet	500
	S-Lo	500
Dry	Auto	X, J zone : 880

ADUH09LUAS1 (Static pressure:12Pa) (rpm)

Operation mode	Air flow mode	Fan Speed
Heating	Hi	1260
	Me+	1260
	Me	1160
	Lo	1060
	Quiet	960
	S-Lo	500
Cooling / Fan	Hi	1260
	Me	1160
	Lo	1060
	Quiet	960
	*Soft Quiet	500
	S-Lo	500
Dry	Auto	X, J zone : 960

ADUH12LUAS1 (Static pressure:12Pa) (rpm)

Operation mode	Air flow mode	Fan Speed
Heating	Hi	1340
	Me+	1340
	Me	1240
	Lo	1140
	Quiet	1030
	S-Lo	500
Cooling / Fan	Hi	1340
	Me	1240
	Lo	1140
	Quiet	1030
	*Soft Quiet	500
	S-Lo	500
Dry	Auto	X, J zone :1030

ADUH18LUAS1 (Static pressure:12Pa) (rpm)

Operation mode	Air flow mode	Fan Speed
Heating	Hi	1380
	Me+	1380
	Me	1300
	Lo	1220
	Quiet	1140
	S-Lo	600
Cooling / Fan	Hi	1380
	Me	1300
	Lo	1220
	Quiet	1140
	*Soft Quiet	600
	S-Lo	600
Dry	Auto	X, J zone :1140

ADUH24LUAS1 (Static pressure:12Pa) (rpm)

Operation mode	Air flow mode	Fan Speed
Heating	Hi	1460
	Me+	1460
	Me	1360
	Lo	1260
	Quiet	1180
	S-Lo	600
Cooling / Fan	Hi	1460
	Me	1360
	Lo	1260
	Quiet	1180
	*Soft Quiet	600
	S-Lo	600
Dry	Auto	X, J zone :1180

*Note, during Economy operation and operation mode is Fan, air flow is 1 step downs.
(Hi > Me, Me > Lo, Quiet > Soft Quiet)

2. FAN OPERATION

The airflow can be switched in 5 steps such as Auto, Quiet, Lo, Me, Hi, while the indoor fan only runs.
When Fan mode is set at (Auto), it operates on (Me) Fan Speed. < All models >

3. COOLING OPERATION (Auto : Cooling)

Switch the airflow [Auto], and the indoor fan will run according to a room temperature, as shown in Fig 3.
On the other hand, if switched in [Hi]～[Quiet], the indoor fan will run at a constant airflow of [Cooling] operation modes Quiet, Lo, Me, Hi.

(Fig.3 : Airflow change - over)

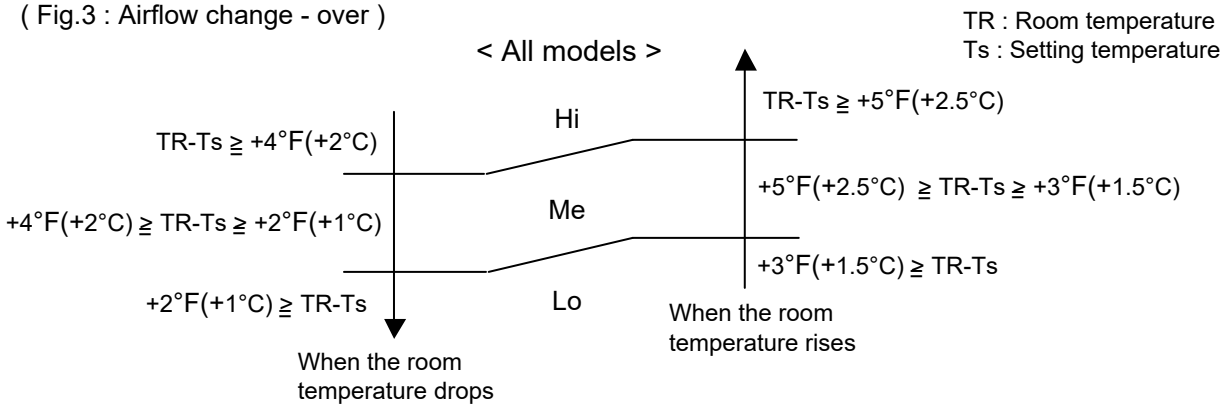

4. DRY OPERATION (Auto : Dry)

During the dry operation, the fan speed setting can not be changed,it operates automatically as shown in Fig. 4

Room temperature variation which the room temperature sensor of the indoor unit body has detected.

(Fig. 4 : Indoor fan control) < All models >

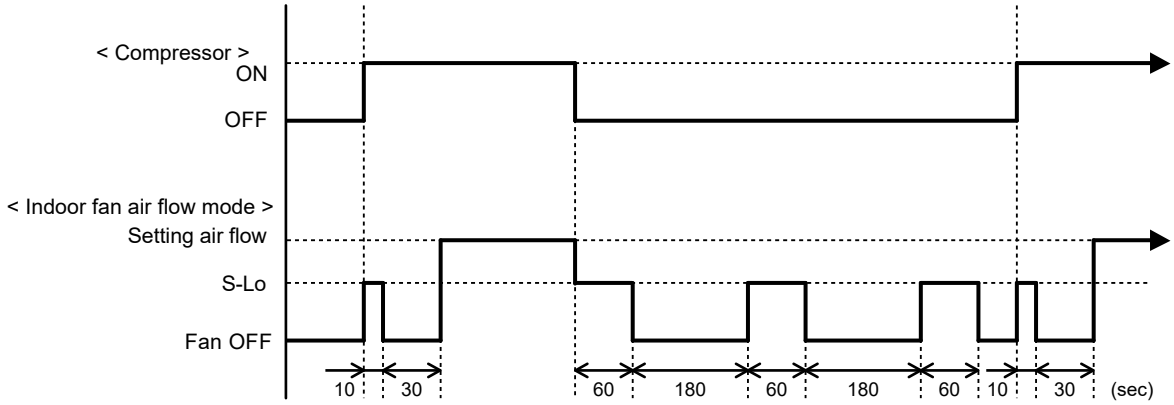

5. HEATING OPERATION

Switch the airflow [Auto], and the indoor fan will run according to a room temperature, as shown in Fig 5.
On the other hand, if switched in [Hi] ～ [Quiet], the indoor fan will run at a constant airflow of [Heat] operation modes Quiet, Lo, Me, Hi, as shown in Table 2.

(Fig.5 : Airflow change - over (Heating : Auto))

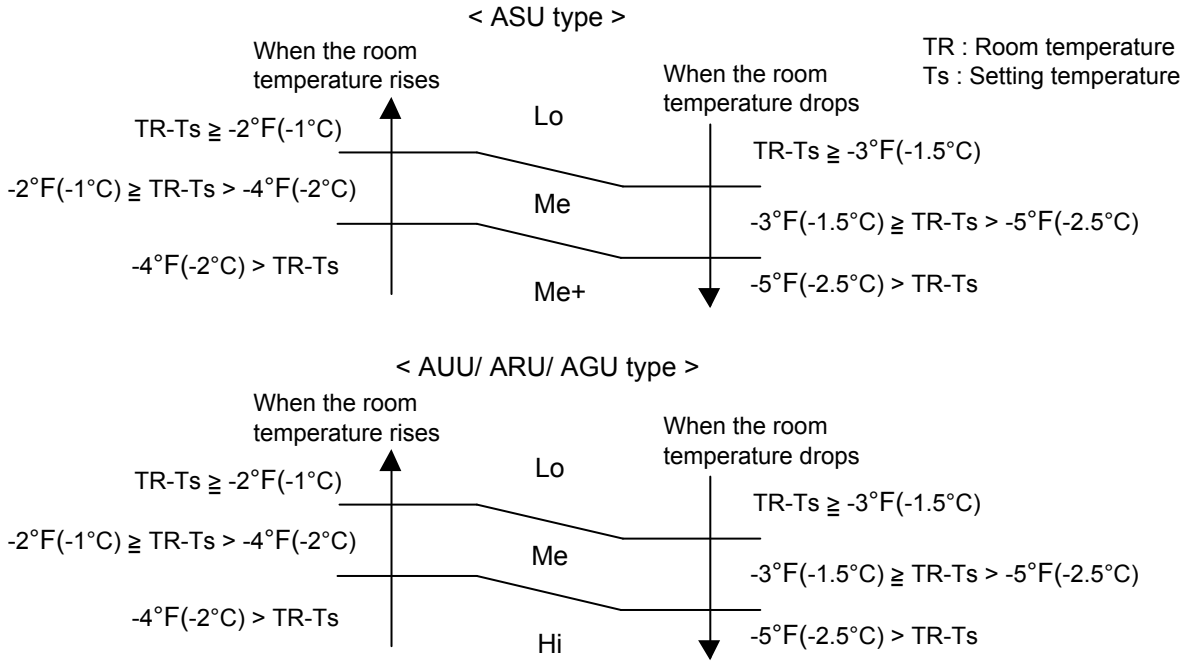

6. COOL AIR PREVENTION CONTROL (For Heating and Min. Heat operation)

The maximum value of the indoor fan speed is set as shown in Fig 6, based on the detected temperature by the indoor heat exchanger sensor in heating mode.
Field setting is necessary at AR and AU type as "Cool air prevention : effective"

(Fig.6 : Airflow change - over for cool air prevention)

During NORMAL HEATING OPERATION

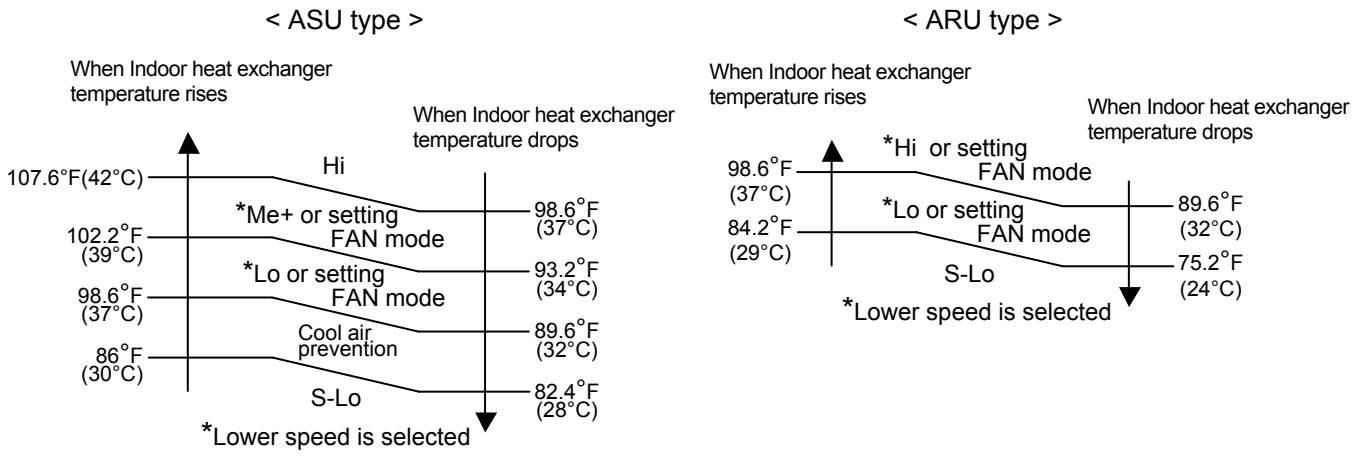

< AUU type >

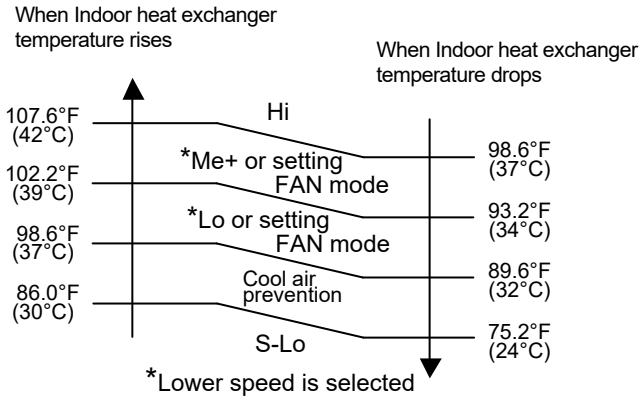

< AGU type >

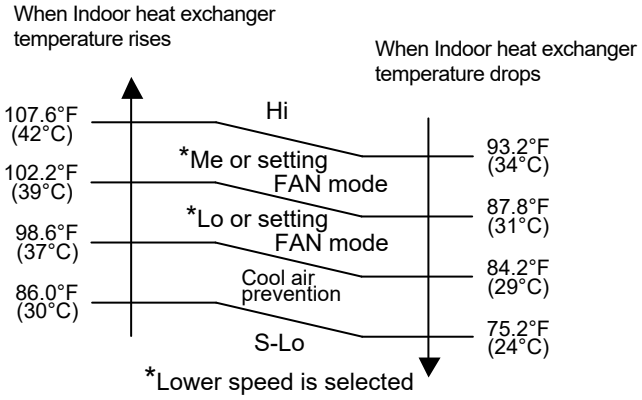

During MIN. HEAT OPERATION

< ASU / AUU type >

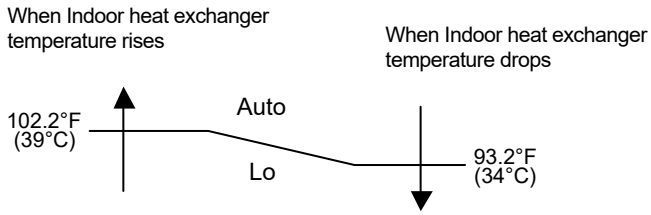

< ARU type >

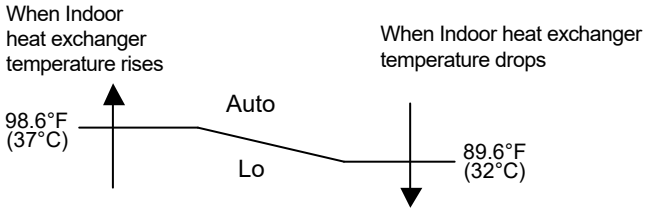

< AGU type >

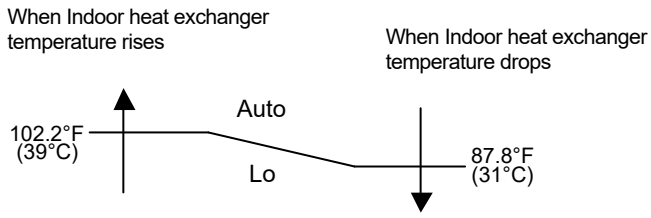

4. LOUVER CONTROL

For Compact Wall Mounted Type < ASU7/ 9/ 12/ 15RLF1 >

1. VERTICAL LOUVER CONTROL

(Function Range)

Each time the button is pressed, the air direction range will change as follow:

(Figure7 : Vertical air direction range)

①⇄②⇄③⇄④⇄⑤⇄⑥⇄⑦

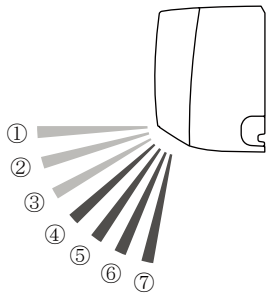

The Remote Controller's display does not change.

- If you set the angle to position ④～⑦ for more than 30 minutes in COOL or DRY mode, they automatically return to position ③ .
  In COOL or DRY mode, if the angle is set to position ④～⑦ for many hours, condensation may be formed, and the drips may wet your property.
- Use the air direction adjustments within the ranges shown above.
- The vertical airflow direction is set automatically as shown, in accordance with the type of operation selected.

  Cooling / Dry mode : Horizontal flow ①
  Heating mode : Downward flow ⑦

- During AUTO or Heating mode operation, for the first a few minutes after beginning operation, air-flow will be horizontal ① ; the air direction cannot be adjusted during this period.
  The air flow direction setting will temporarily become ① when the temperature of the air -flow is low at the start of the Heating mode.

2. SWING OPERATION

To select Vertical Airflow Swing Operation

When the swing signal is received from the remote controller, the vertical louver starts to swing.

(Table3 : Swinging range)

The type of operation	Range
Cooling / Dry mode Fan mode (①～③)	① ⇔ ③
Heating mode Fan mode (④～⑦)	④ ⇔ ⑦

- The SWING operation may stop temporarily when the air conditioner’s fan is not operating, or when operating at very low speeds.

To select Horizontal Airflow Swing Operation

(No function)

For Compact Wall Mounted Type < ASUH07/ 09/ 12/ 15LPAS >

1. VERTICAL LOUVER CONTROL

(Function Range)

(Figure8 : Vertical air direction range)

Each time the button is pressed, the air direction range will change as follow :

① ⇄ ② ⇄ ③ ⇄ ④ ⇄ ⑤ ⇄ ⑥

Cooling / Dry mode : ① ↔ ④
Heating mode : ③ ↔ ⑥
*Fan mode : ① ↔ ④ or ③ ↔ ⑥

*The Swing operation range depends on the airflow direction set before the Swing operation.

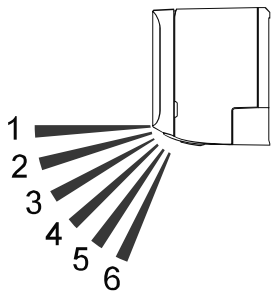

NOTES:

- Do not adjust the horizontal louver by hand.
- In the Auto or Heating mode, the airflow direction stay position ① for a while from the start of the operation.
- In the Cooling or Dry mode, position ①～③ is recommended to prevent condensation drips damaging your property. If position ④～⑥ keeps for 30 minutes or more in these modes, the airflow direction changes to position ③ automatically.
- When using the mobile app (optional WLAN adapter is necessary), the up/down airflow can be selected from ④ positions.

2. SWING OPERATION

To select Vertical Airflow Swing Operation

When the swing signal is received from the remote controller, the vertical louver starts to swing.

(Table4 : Swinging range)

The type of operation	Range
Cooling / Dry mode Fan mode (①～④)	① ⇔ ④
Heating mode Fan mode (③～⑥)	③ ⇔ ⑥

- The SWING operation may stop temporarily when the air conditioner's fan is not operating, or when operating at very low speeds.

To select Horizontal Airflow Swing Operation

(No function)

For Wall Mounted Type < ASUH18/ 24LPAS >

1. VERTICAL LOUVER CONTROL (Up/down airflow direction)

(Figure9 : Vertical air direction range)

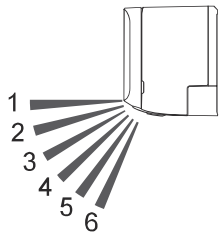

(Function Range)

Each time the button is pressed, the air direction range will change as follow :

① ⇄ ② ⇄ ③ ⇄ ④ ⇄ ⑤ ⇄ ⑥

Cooling / Dry mode : ① ↔ ④
Heating mode : ③ ↔ ⑥
*Fan mode : ① ↔ ④ or ③ ↔ ⑥

*The Swing operation range depends on the airflow direction set before the Swing operation.

NOTES:

- Do not adjust the horizontal louver by hand.
- In the Auto or Heating mode, the airflow direction stay position ① for a while from the start of the operation.
- In the Cooling or Dry mode, position ①～③ is recommended to prevent condensation drips damaging your property. If position ④～⑥ keeps for 30 minutes or more in these modes, the airflow direction changes to position ③ automatically.
- When using the mobile app (optional WLAN adapter is necessary), the up/down airflow can be selected from ④ positions.

2. HORIZONTAL LOUVER CONTROL (Left/right airflow direction)

(Function Range)

Each time the button is pressed, the air direction range will change as follow :

① ⇄ ② ⇄ ③ ⇄ ④ ⇄ ⑤

(Figure10 : Horizontal air direction range)

NOTES:

- In the Auto mode operation, you cannot change the airflow direction for a while from the start of the operation.

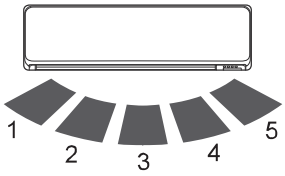

3. SWING OPERATION

Vertical Airflow Swing Operation

When the swing signal is received from the remote controller, the vertical louver starts to swing.

(Table5 : Swinging range)

The type of operation	Range
Cooling / Dry / Fan mode (①～③)	① ⇔ ④
Heating / Fan mode (④～⑦)	③ ⇔ ⑥

- When the indoor fan is S-Lo or Stop mode, the swing operation is interrupted and it stops at either upper end or bottom end.

Horizontal Airflow Swing Operation

When the swing signal is received from the remote controller, the horizontal louver starts to swing.

(Table6 : Swinging range)

The type of operation	Range
Cooling / Dry / Heating / Fan mode	① ⇔ ⑤

- When the indoor fan is S-Lo or Stop mode, the swing operation is interrupted and it stops at either upper end or bottom end.

Vertical and Horizontal Airflow Swing Operation

- When the horizontal swing signal is input from remote control, the combination of the vertical and horizontal swing operation is performed.

※ **Power Diffuser doesn't swing in any swing operation.**

For Floor Type < AGU9/ 12/ 15RLF >

1. VERTICAL LOUVER CONTROL

(Function Range)

Each time the button is pressed, the air direction range will change as follow : (Figure11 : Air direction range)

① ⇄ ② ⇄ ③ ⇄ ④ ⇄ ⑤

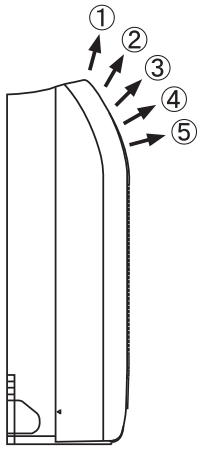

- The Remote Controller's display does not change.
- Use the air direction adjustments within the ranges shown above.

- The vertical airflow direction is set automatically as shown, in accordance with the type of operation selected.

Cooling / Dry / Fan mode : Horizontal flow ①
Heating mode : Downward flow ④

- When the temperature of the air being blown out is low at the start of heating operation or during defrosting, the airflow direction temporarily becomes ① to prevent cold air being blown onto the body.

- During Monitor operation in AUTO CHANGEOVER mode, the airflow direction automatically becomes ①, and it cannot be adjusted.

2. ADJUST THE RIGHT-LEFT LOUVERS

- Move the Right-Left louvers to adjust airfow in the direction you prefer.(Figure12 : Air direction range)

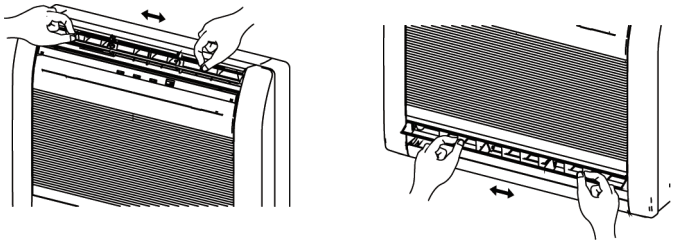

3. SWING OPERATION

To select Vertical Airflow Swing Operation

When the swing signal is received from the remote controller, the vertical louver starts to swing .

(Table7 : Swinging range)

The type of operation	Range
Cooling / Dry / Heating / Fan mode	① ⇔ ⑤

- When the indoor fan is either at S-Lo or Stop mode, the swinging operation is interrrupted and it stops at either upper end or bottom end.

To select Horizontal Airflow Swing Operation

(No function)

For Compact Cassette Type < ACUH7/ 9/ 12/ 18LUAS1 >

1. VERTICAL LOUVER CONTROL

(Function Range)

Each time the button is pressed, the air direction range will change as follow :

①⇄②⇄③⇄④

(Figure13 : Vertical air direction range)

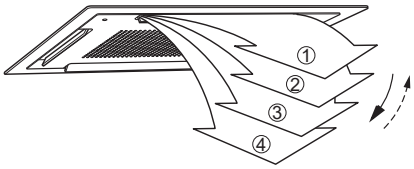

・Use the air direction adjustments within the ranges shown above.

・The vertical airflow direction is set automatically as shown, in accordance with the type of operation selected.

Cooling / Dry / Fan mode : Horizontal flow ①
Heating mode : Downward flow ④

・During AUTO mode operation, for the first minute after start-up, air-flow will be horizontal ① ; the air direction cannot be adjusted during this period.

2. SWING OPERATION

When the swing signal is received from the remote controller, the vertical louver starts to swing. The range of swing depends on the set airflow direction.

(Table8 : Swinging range)

The type of operation	Range
Cooling / Dry / Heating / Fan mode	① ⇔ ④

・When the indoor fan is either at S-Lo or Stop mode, the swinging operation is interrupted and the louver stops at the memorized position.
(Stop mode means Operation stop.)

5. OUTDOOR FAN CONTROL

1. Outdoor Fan Motor

The Table 9 shows the fan speed of the outdoor unit.

(Table 9 : Fan speed of the outdoor unit)

	Cooling	Heating
AOU18RLXFZ	780/ 730/ 400/ 300/ 250/ 200 rpm	780/ 730/ 660/ 400/ 300/ 250/ 200 rpm
AOU24RLXFZ		
AOU36RLXFZ	850/ 780/ 400/ 300/ 200 rpm	900/ 780/ 400/ 300/ 200 rpm

* It runs at 500rpm for 20 seconds after starting up the outdoor fan.

(AOU18 / 24RLXFZ)
When the outdoor heat exchanger temperature is lower than 2°F(1°C), the fan speed switches to 780rpm on heating mode.

(AOU36RLXFZ)
When the outdoor heat exchanger temperature is lower than 4°F(2°C), the fan speed switches to 900rpm on heating mode.

6. TIMER OPEARTION CONTROL

6-1 WIRELESS REMOTE CONTROLLER

The Table 10 shows the available timer setting based on the product model.

(Table 10 : Timer setting)

ON TIMER / OFF TIMER	PROGRAM TIMER	SLEEP TIMER	*WEEKLY TIMER
○	○	○	○

* For ASU9/ 12/ 15RLS2 type

1. ON / OFF TIMER

・OFF timer : When the clock reaches the set time, the air conditioner will be turned off.

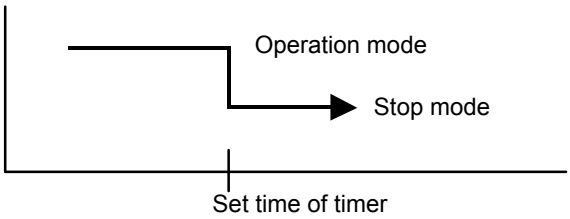

・ON timer : When the clock reaches the set time, the air conditioner will be turned on.

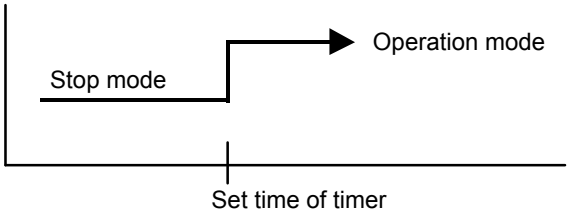

2. PROGRAM TIMER

・The program timer allows the OFF timer and ON timer to be used in combination one time.

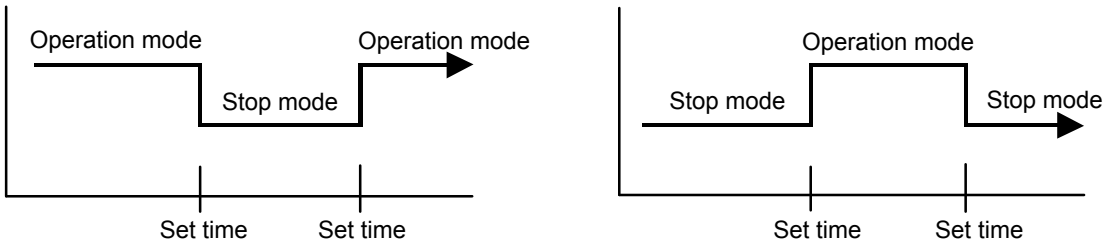

・Operation will start from the timer setting (either OFF timer or ON timer) whichever is closest to the clock's current timer setting.
The order of operations is indicated by the arrow in the remote control unit's display.

・SLEEP timer operation cannot be combined with ON timer operation.

3. SLEEP TIMER

If the sleep is set, the room temperature is monitored and the operation is stopped automatically. If the operation mode or the set temperature is change after the sleep timer is set, the operation is continued according to the changed setting of the sleep timer from that time ON.

In the cooling operation mode

When the sleep timer is set, the setting temperature is increased 2°F(1°C).
It increases the setting temperature another 2°F(1°C) after 1 hour.
After that, the setting temperature is not changed and the operation is stopped at the time of timer setting.

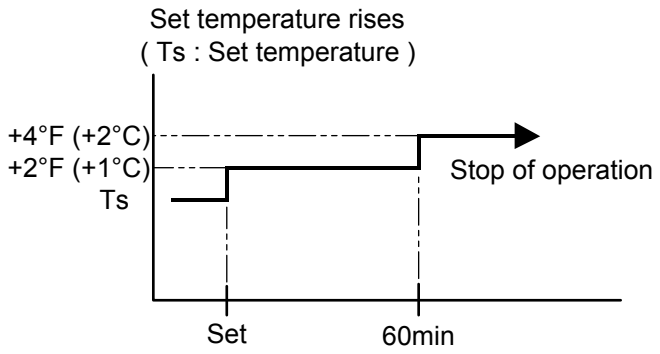

In the heating operation mode

When the sleep timer is set, the setting temperature is decreased 2°F(1°C).
It decreases the setting temperature another 2°F(1°C) every 30 minutes.
Upon lowering 4deg C, the setting temperature is not changed and the operation stops at the time of timer setting.

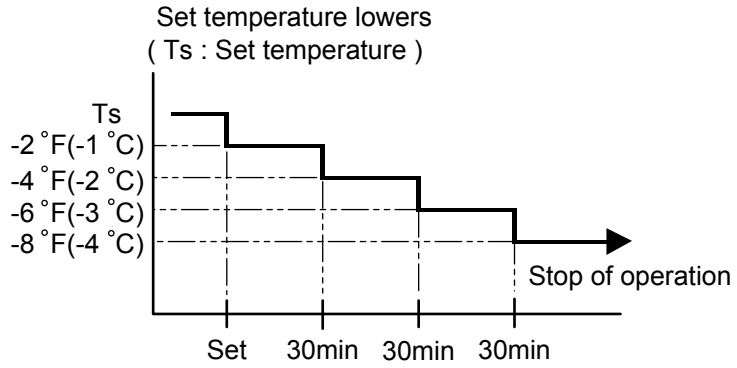

4. WEEKLY TIMER (For ASU9/ 12/ 15RLS2 type)

This timer function can set operation times of the each day of the week.
All days can be set together,the weekly timer can be used to repeat the timer setting for all of the days.

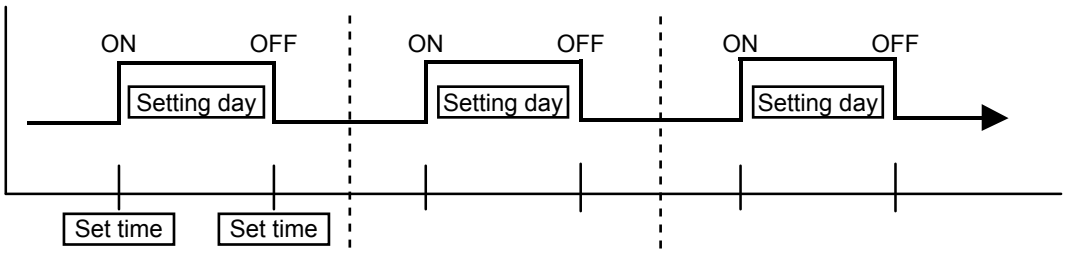

6-2 WIRED REMOTE CONTROLLER

The Table 11 shows the available timer setting based on the product model.

(Table 11 : Timer setting)

ON TIMER / OFF TIMER	WEEKLY TIMER	TEMPERATURE SET BACK TIMER
○	○	○

1. ON TIMER / OFF TIMER

Same to 6-1 **ON / OFF TIMER** and shown in those.

2. WEEKLY TIMER

This timer function can set operation times of the each day of the week.
All days can be set together,the weekly timer can be used to repeat the timer setting for all of the days.

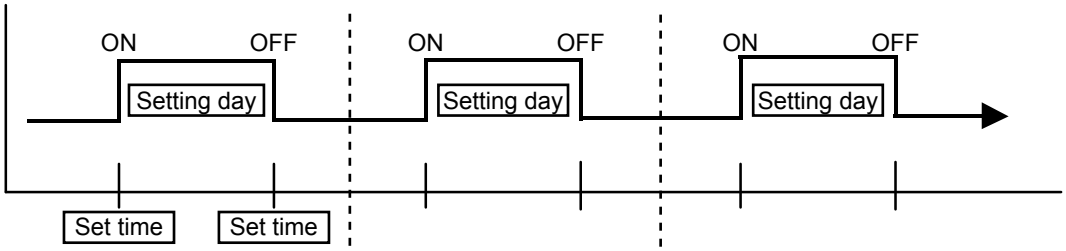

3. TEMPERATURE SET BACK TIMER

This timer function can change setting temperature of setting operation times of the each day of the week.
This can be together with other timer setting.

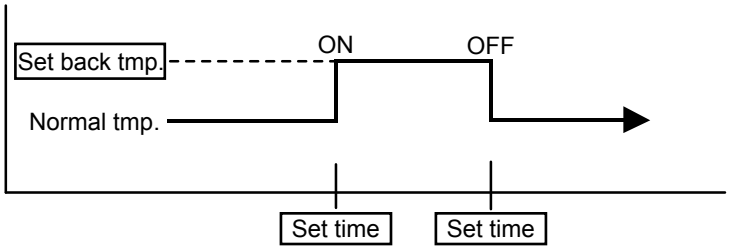

7. COMPRESSOR CONTROL

1. OPERATION FREQUENCY RANGE

The operation frequency of the compressor is different based on the operation mode as shown in the Table 12.

(Table 12 : Compressor Operation Frequency Range)

	Cooling		Heating	
	Min	Max	Min	Max
AOU18RLXFZ AOU24RLXFZ	20rps	100rps	24rps	110rps
AOU36RLXFZ	20rps	90rps	20rps	95rps

2. OPERATION FREQUENCY CONTROL AT START UP

For AOU18RLXFZ / AOU24RLXFZ

The compressor frequency soon after the start-up is controlled as shown in the figure 14-1.

(Fig.14-1 : Compressor Control at Start-up)

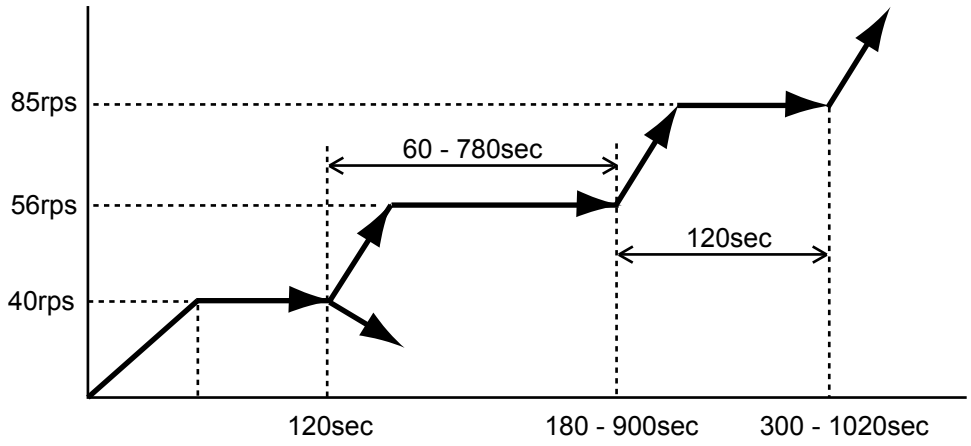

For AOU36RLXFZ

The compressor frequency soon after the start-up is controlled as shown in Figure 14-2.

(Fig.14-2 : Compressor Control at Start-up)

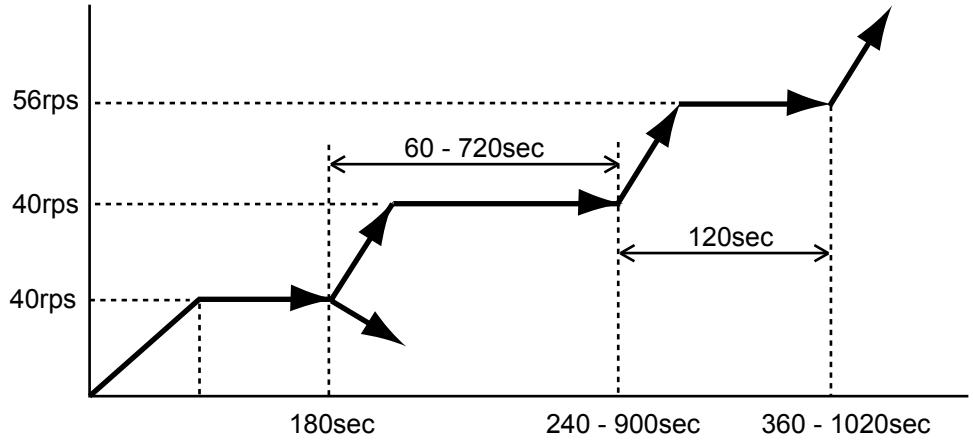

8. ELECTRONIC EXPANSION VALVE CONTROL

The most proper opening of the electronic expansion valve is calculated and controlled under the present operating condition based on the Table 13.
The compressor frequency, the temperatures detected by the discharge temperature sensor and the outdoor temperature sensor.

(Table 13 : The pulse range of the electronic expansion valve control)

	Operation mode	Pulse range
AOU18/ 24/ 36RLXFZ	Cooling /Dry mode	50 ~ 480
	Heating mode	30 ~ 480

* At the time of supplying the power to the outdoor unit, the initialization of the electronic expansion valve is operated (1000 pulses are input to the closing direction).

9. TEST OPERATION CONTROL

- With Wireless Remote Controller (with TEST RUN button)

  Under the condition where the air conditioner runs, press the TEST RUN button, and the test operation control mode will appear.
  During test running, the operation lamp and timer lamp of the air conditioner body twinkle simultaneously.
  Set the test operation mode, and the compressor will continue to run regardless of whether the room temperature sensor detects.
  The test operation mode is released if 60 minutes have passed after setting up the test operation.

- With Wired Remote Controller (without TEST RUN button)

  Under the condition where the air conditioner stops, press the MASTER CONTROL button and the FAN CONTROL button simultaneously for 5 seconds or more, and the test operation control mode will appear.
  During test running, "01" will display on the remote controller display.
  Set the test operation mode, and the compressor will continue to run regardless of whatever the room temperature sensor detects.
  The test operation mode is released if 60 minutes have passed after setting up the test operation.

10. PREVENT TO RESTART FOR 3 MINUTES (3 MINUTES ST)

The compressor won't enter operation status for 3 minutes after the compressor is stopped, even if any operation is given.

11. 4-WAY VALVE EXTENSION SELECT

At the time when the air conditioner is switched from the Cooling mode to Heating mode, the compressor is stopped, and the 4-way valve is switched in 3 minutes later after the compressor stopped.

12. AUTO RESTART

When the power was interrupted by a power failure, etc. during operation, the operation contents at that time are memorized and when power is recovered, operation is automatically resumed with the memorized operation contents.

(Table 14 : Operation contents memorized when the power is interrupted)

	Wireless remote controller	Wired remote controller (When Memory Backup : Disable)	Wired remote controller (When Memory Backup : Enable)	
Operation mode	○	○	○	
Set temperature	○	○	○	
Set air flow	○	○	○	
Thermistor detected position	—	×	○	
Timer mode	○	×	OFF Timer	×
			ON Timer	×
			WEEKLY Timer	○
			TEMPERRATURE SET BACK Timer	○

○ : Memorize
× : Not memorize

*It is necessary to set on the DIP-SW1-No,6 of the wired remote controller, to enable the memory backup. Refer to the installation manual of wired remote controller for details.

13. MANUAL AUTO OPERATION

If MANUAL / AUTO Button is pushed continuous from 3 seconds to 10 seconds, manual auto operation will starts.
If the remote control is lost or battery power dissipated, this function will work without the remote control.

(Table 15 : Manual auto operation control)

Functions	All models
OPERATION MODE	Auto changeover
SETTING TEMP.	75.2°F(24°C)
FAN MODE	Auto
VERTICAL LOUVER	NORMAL
HORIZONTAL LOUVER	NORMAL
TIMER MODE	Continuous (No timer setting available)
SWING OPERATION	OFF
ECONOMY	OFF

14. COMPRESSOR PREHEATING

When the outdoor heat exchanger temperature is lower than Operation temperature (Refer to Table 16) and the heating operation has been stopped for 3 hours, power is applied to the compressor and the compressor is heated.
(By heating the compressor, warm air is quickly discharged when operation is started.)
When operation was started, and when the outdoor temperature rises to Release temperature or greater, preheating is over.

(Table 16 : Preheating Operation / Release Temperature)

Before 24 hour		After 24 hour	
Operation temperature	Release temperature	Operation temperature	Release temperature
37.4°F(3°C)	44.6°F(7°C)	32°F(0°C)	39.2°F(4°C)

15. POWERFUL OPERATION (For ASU*RLS2/ ASU*RLF1/ AGU*RLF type)

The POWERFUL OPERATION functions by pressing POWERFUL button on the remote controller.
The indoor unit & outdoor unit will operate at maximum power as shown in Table 17.

(Table 17 : POWERFUL operation)

	Powerful operation
COMPRESSOR FREQUENCY	Maximum
FAN CONT. MODE	Powerful
SETTING LOUVER	Cooling/ Dry : 3, Heating : 5

Release Condition is as follows.
[Cooling / Dry]
- Room tenperature ≦ Setting temperature -3.0°F(- 1.5°C) or Operation time has passed 20 minutes.

[Heating]
- Room tenperature ≧ Setting temperature +3.0°F(+1.5°C) or Operation time has passed 20 minutes.

16. MIN. HEAT OPERATION

MIN. HEAT operation performs as below when pressing MIN. HEAT button or Weekly timer setting on the remote controller.

(Table 18 : MIN. HEAT operation)

Mode	Heating
Setting temperature	50°F (10°C)
Fan mode	Auto
LED display	Economy
Defrost operation	Operate as normal

17. ECONOMY OPERATION

The ECONOMY operation functions by pressing ECONOMY button on the remote controller.
At the maximum output, ECONOMY Operation is approximately 70% of normal air conditioner operation for cooling and heating.
The ECONOMY operation is almost the same operation as below settings.

(Table 19 : ECONOMY operation)

Mode	Cooling/ Dry	Heating
Target temperature	Setting temp.+2°F(+1°C)	Setting temp.-2°F(-1°C)

18. FRESH AIR CONTROL(For AU / AR type)

The fan motor for Fresh Air is operated in synchronization with the indoor fan operation as shown in Figure 15.

(Fig.15 : Fresh Air control)

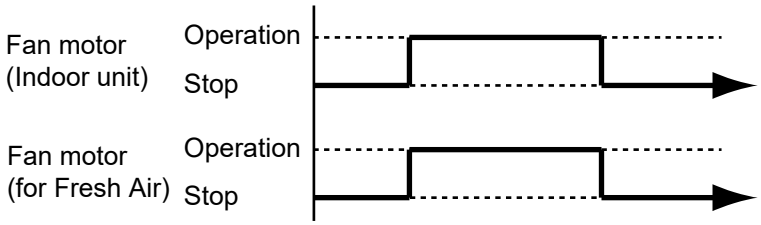

*It needs the external relay and power supply.

19. EXTERNAL ELECTRICAL HEATER CONTROL (For AR type)

The External Electrical Heater is operated as below.

< Heater : ON condition >

When all of the following conditions are met, external elecrtical heater will operate according to Figure 16.

System type	Heatpump
Operation mode	Heating
Compressor	ON
Indoor fan	ON (S-Lo is excluded)

< Heater : OFF condition >

1). When one of the ON conditions is not met.
2). When Defrost operation or Oil recovery operation starts

(Fig. 16 : External electrical heater control)

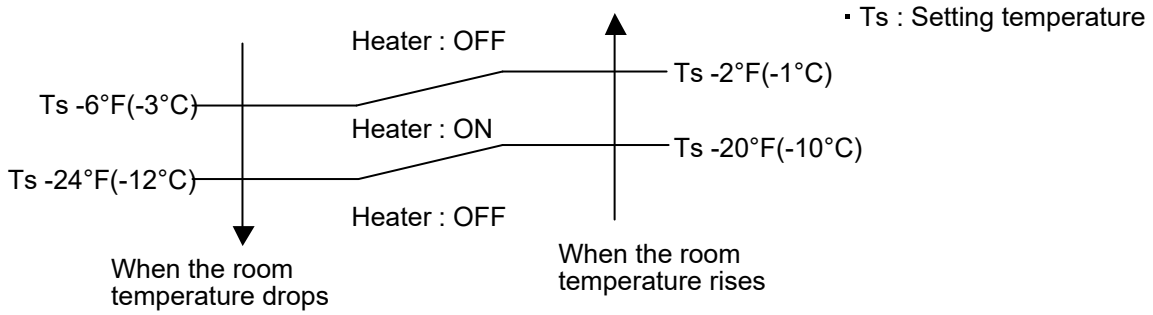

20. DRAIN PUMP OPERATION(For AU / AR type)

During Cooling / Dry mode

1. When the compressor starts, the drain pump starts simultaneously.
2. The drain pump operates continuously for 3 minutes after the compressor is turned off.
3. When the compressor stops by the "Anti- freezing protection", the drain pump is turned off in 1 hour after the compressor stops.
4. When the water level in the drain pan rises up and then the float switch functions:
   ① The compressor, indoor and outdoor fan motor operation are stopped.
   ② Drain pump operates continuously for 3 minutes after the float switch is turned off. (Almost condensing water may be drained)
   ③ The indoor unit fan motor operates after the float switch is turned off.
5. When the float switch turns ON continuously for 3 minutes, "FAILURE INDICATION" operates. (It is necessary to turn off power for release it.)
6. When the float switch turns OFF less than 3 minutes, the unit starts Cooling operation.

(Fig. 17 : Detail of Drain Pump Operation in Cooling / Dry)

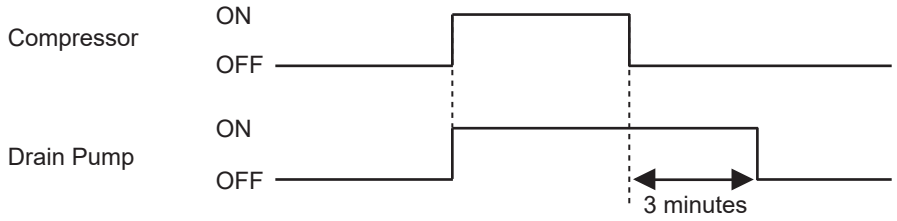

<Float Switch turns OFF less than 3 minutes>

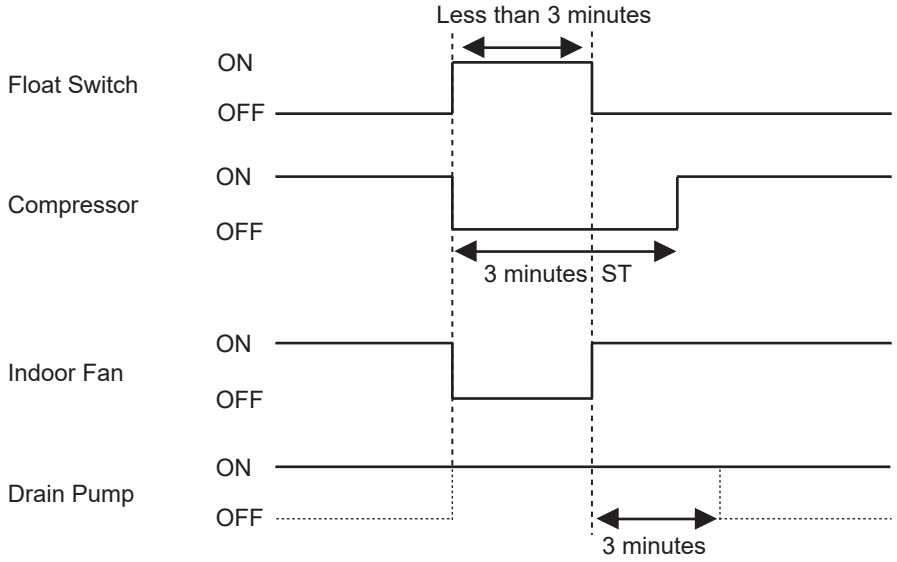

During HEATING / FAN mode / Stop operation

1.When the water level in the drain pan rises up and then the float switch functions:
   Drain pump operates continuously for 3 minutes after the float switch is turned off.
   (Almost condensing water may be drained)
2. When the float switch turns ON continuously for 3 minutes, "FAILURE INDICATION" operates.
   Thereafter, even if the float switch turns OFF, the "FAILURE INDICATION" is not released.
   (It is necessary to turn off power for release it.)

(Fig. 18 : Detail of Drain Pump Operation in Heating)

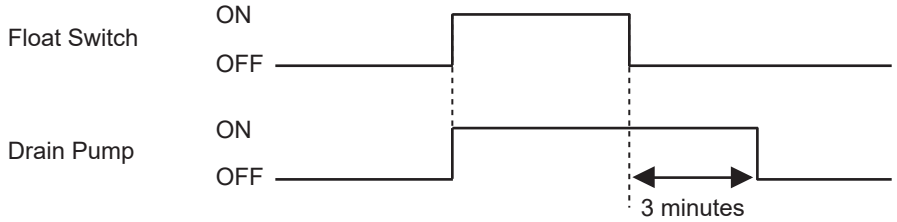

21. DEFROST OPERATION CONTROL

1. CONDITION OF STARTING THE DEFROST OPERATION

The defrost operation starts when the outdoor heat exchanger temperature sensor detects the temperature lower than the values shown in Table 20-1, 20-2, 20-3.

1-1 NORMAL DEFROST

For AOU18 / 24RLXFZ

(Table 20-1 : Condition of starting defrost operation)

Normal defrost	Compressor integrating operation :Less than 45min.	Compressor integrating operation :45min and over	
		Less than 6 min. *1 or 10min. *2	After 6 min. *1 or 10min. *2
	Does not operate		17.6°F(-8°C) *3 10.3°F(-12°C) *4 6.8°F(-14°C) *5 3.2°F(-16°C) *6

*1. It means contiguous operation time.
*2. Compressor stop time:
Below 20min. → Select 6min.
Above 20min. → Select 10min.
*3. Outdoor temp. > 37.4°F(3°C)
*4. Outdoor temp. > 30.2°F(-1°C)
*5. Outdoor temp. > 23.0°F(-5°C)
*6. Outdoor temp. ≦ 23.0°F(-5°C)

For AOU36RLXFZ

(Table 20-2 : Condition of starting defrost operation)

Normal defrost	Compressor integrating operation :Less than 45min.	Compressor integrating operation :45min and over	
		Less than 6 min. *1 or 10min. *2	After 6 min. *1 or 10min. *2
	Does not operate		14.0°F(-10°C) *3 10.4°F(-12°C) *4

*1. It means contiguous operation time.
*2. Compressor stop time:
Below 20min. → Select 6min.
Above 20min. → Select 10min.
*3. Outdoor temp. > 30.2°F(-1°C)
*4. Outdoor temp. ≦ 30.2°F(-1°C)

1-2. INTEGRATING DEFROST

For AOU18 / 24 / 36RLXFZ

(Table 20-3 : Condition of starting defrost operation)

Integrating defrost	Compressor integrating operation time	
	More than 210 minutes (For continuous operation)	Less than 10 minutes * (For intermittent operation)
	When the compressor is stopped, If detected outside air temp. at 35.6°F(2°C)	OFF count of the compressor 40 times (at outside air temp. < 35.6°F(2°C)

*If the compressor continuous operation time is less than 10 minutes, the OFF number of the compressor is counted.
If any defrost operated, the compressor OFF count is cleared.

2. CONDITION OF THE DEFROST OPERATION COMPLETION

Defrost operation is released when the conditions become as shown in Table 21-1, 21-2.

For AOU18 / 24RLXFZ

(Table 21-1 : Defrost release condition)

Release Condition
Outdoor heat exchanger temperature sensor value is higher than 50.0°F(10°C) or Compressor operation time has passed 15 minutes.

For AOU36RLXFZ

(Table 21-2 : Defrost release condition)

Release Condition
Outdoor heat exchanger temperature sensor value is higher than 53.3°F(12°C) or Compressor operation time has passed 15 minutes.

3. Defrost Flow Chart

The defrosting shall proceed by the integrating operation time, outdoor temperature and outdoor heat exchanger temperature as follows.

For AOU18 / 24RLXFZ

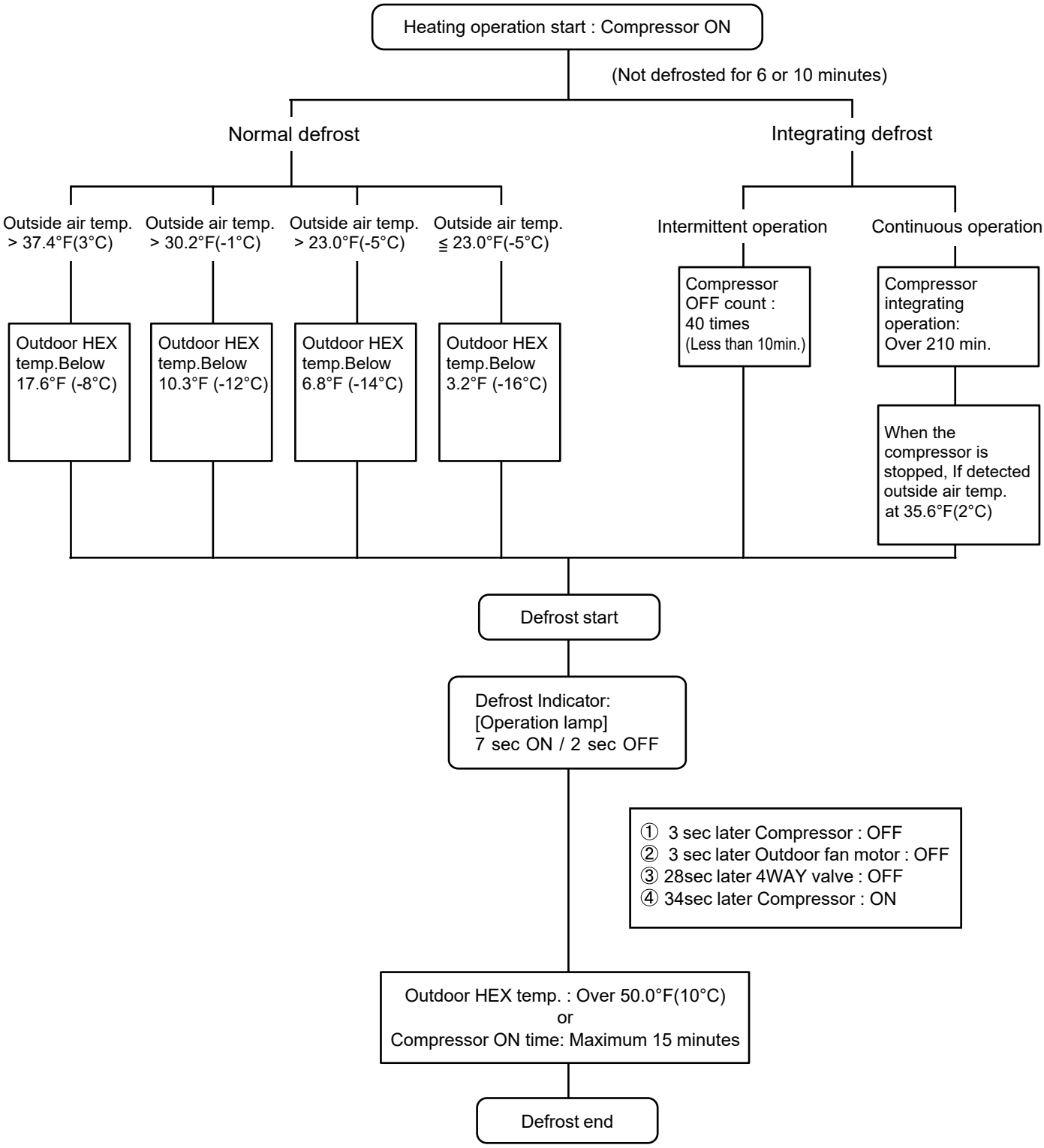

For AOU36RLXFZ

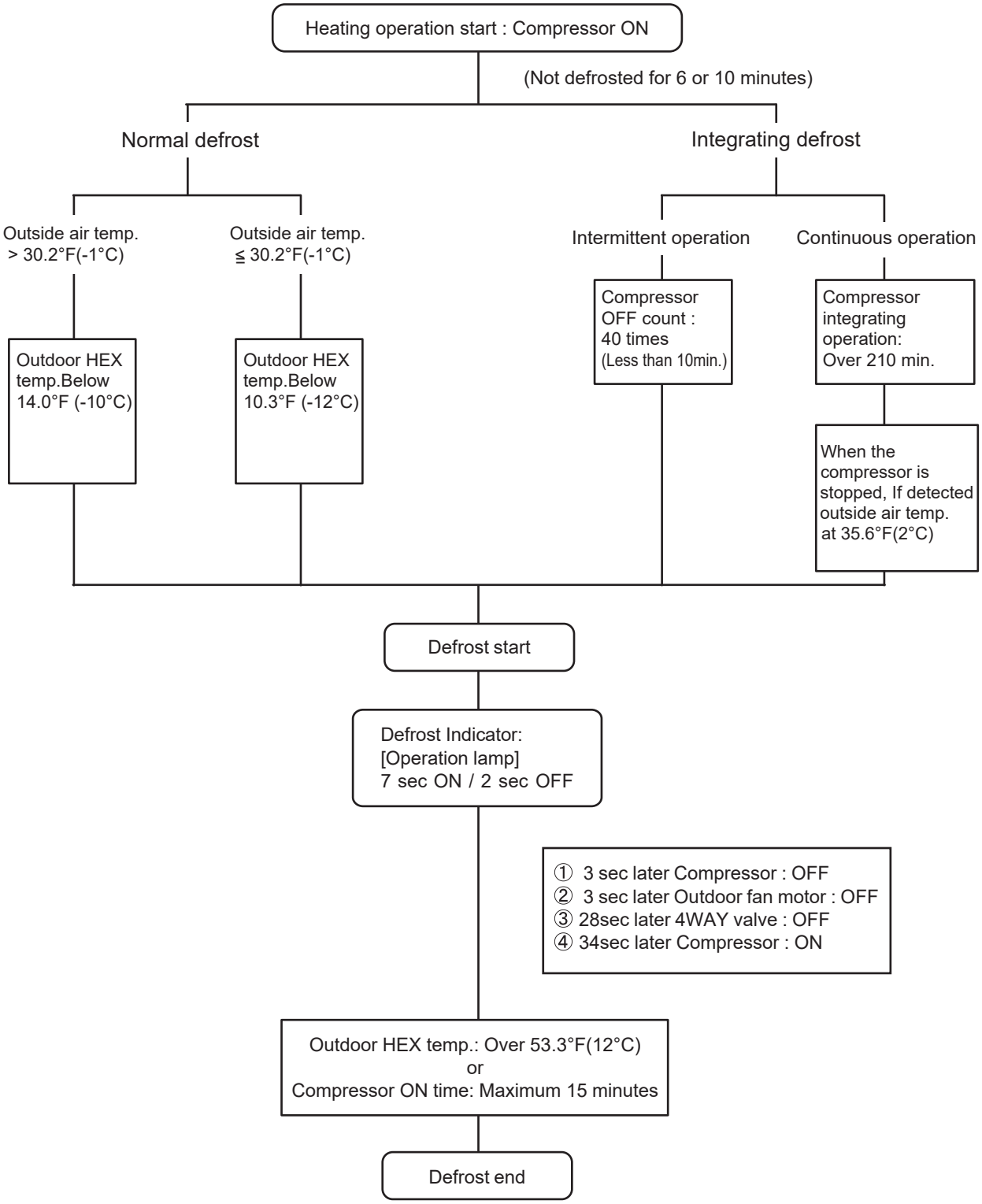

22. VARIOUS PROTECTIONS

1. DISCHARGE GAS TEMPERATURE OVER RISE PREVENTION CONTROL

The discharge gas thermosensor (discharge thermistor : Outdoor side) will detect discharge gas temperature.

When the discharge temperature becomes higher than Ⅰ,the compressor frequency is decreased 20rps, and it continues to decrease the frequency for 20rps every 120 seconds until the temperature becomes lower than Ⅱ.
When the discharge temperature becomes lower than Ⅱ,the control of the compressor frequency is released.

When the discharge temperature becomes higher than Ⅲ ,the compressor stops.
When the discharge temperature becomes lower than 176°F(80°C) ,the compressor operates.

(Table 22 : Discharge Temperature Over Rise Prevension Control / Release Temperature)

	Tenperrature Ⅰ	Tenperrature Ⅱ	Tenperrature Ⅲ
AOU18 / 24RLXFZ	220°F(105°C)	203°F (95°C)	230°F(110°C)
AOU36RLXFZ	230°F(110°C)	212°F(100°C)	239°F(115°C)

2. CURRENT RELEASE CONTROL

The compressor frequency is controlled so that the outdoor unit input current does not exceeds the current limit value that was set up with the outdoor temperature.
The compressor frequency returns to the designated frequency of the indoor unit at the time when the frequency becomes lower than the release value.

3. ANTI-FREEZING CONTROL (Cooling mode)

When the indoor unit heat exchanger and
2-way valve temperature becomes lower than ,the compressor frequency
is decreased 20rps, and it continues to decrease the frequency for 20rps every 120 seconds until the temperature becomes higher than Ⅱ.
This operation is not released until both the temperature of the indoor unit heat exchanger and

2-way valve temperature exceed the release temperature.

(Table 23 : Anti-freezing Protection Operation / Release Temperature)

Outside air Temperature	Tenperrature Ⅰ		Tenperrature Ⅱ	
	Indoor Heat Ex. Temperature	2-way valve Temperature	Indoor Heat Ex. Temperature	2-way valve Temperature
≧ 53.6°F(12°C)	37.4°F(3°C)	35.6°F(2°C)	42.8°F(6°C)	41.0°F(5°C)
< 53.6°F(12°C)	37.4°F(3°C)	35.6°F(2°C)	55.4°F(13°C)	53.6°F(12°C)

4. COOLING PRESSURE OVER RISE PROTECTION

When the outdoor unit heat exchange sensor temperature rises to 158.9 ± 6°F(70.5 ± 3°C) or greater, the compressor is stopped and error display is indicated.

5. HIGH TEMPERATURE RELEASE CONTROL (HEATING MODE)

On heating mode, the compressor frequency is controlled as following based on the detection value of the indoor heat exchanger temperature sensor.

(Fig. 19 : Heating Overload Protection Control)

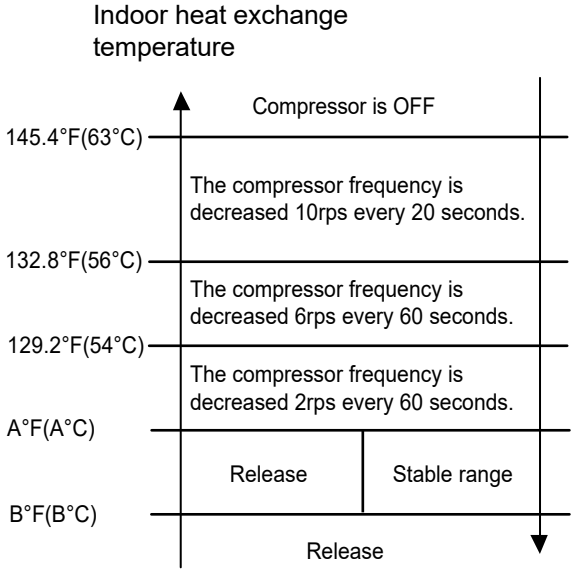

Outdoor heat exchange tempreture	In one operation of the indoor unit : Qu air than		All indoor unit opeate, : Qu air	
	A°F (A°C)	B°F (B°C)	A°F (A°C)	B°F (B°C)
15.8°F(-9°C)≦ Th	125.6°F (52°C)	122.0°F (50°C)	118.4°F (48°C)	114.8°F (46°C)
12.2°F(-11°C)≦ Th<15.8°F(-9°C)	125.6°F (52°C)	122.0°F (50°C)	118.4°F (48°C)	114.8°F (46°C)
8.6°F(-13°C) ≦ Th<12.2°F(-11°C)	125.6°F (52°C)	118.4°F (48°C)	118.4°F (48°C)	114.8°F (46°C)
5.0°F(-15°C) ≦ Th<8.6°F(-13°C)	122.0°F (50°C)	114.8°F (46°C)	118.4°F (48°C)	114.8°F (46°C)
Th<5.0°F(-15°C)	118.4°F (48°C)	111.2°F (44°C)	118.4°F (48°C)	114.8°F (46°C)

6. HIGH PRESSURE PROTECTION

(1). When the pressure switch becomes OFF (Open : higher than 609.2 psi / 4.2 MPa), the compressor is stopped.
It is released when the pressure switch becomes ON (Close : lower than 464.1 psi / 3.2 MPa) after 3 minutes of compressor stop.

(2). When the pressure switch is opened for 10 seconds from power on, all of outdoor unit operation is stopped.
The outdoor unit will start up if the pressure switch is returned to ON after 10 seconds has passed.
When 10 minutes (Cooling) or 3 minutes (Heating) has passed from the compressor stop and pressure switch becomes ON, protection is released and the compressor will restart.

7. COMPRESSOR TEMPERATURE PROTECTION

Compressor temperature sensor is monitoring the compressor temperature.
When the compressor temperature sensor detects higher than Temperature Ⅰ, the compressor is stopped.

When 3 minutes has passed from the compressor stop and the compressor temperature sensor detects lower than Temperature Ⅱ, protection is released and the compressor will restart.

	Temperature Ⅰ	Temperature Ⅱ
AOU18RLXFZ	230°F (110°C)	176°F (80°C)
AOU24RLXFZ		
AOU36RLXFZ	257°F (125°C)	

Refrigerant
R410A

Slim Duct / Compact Cassette Compact Wall Mounted / Wall Mounted / Floor type

INVERTER (MULTI)

2 . TROUBLE SHOOTING

2-1 ERROR DISPLAY

2-1-1 INDOOR UNIT AND WIRED REMOTE CONTROLLER DISPLAY

Please refer the flashing pattern as follows.
The Operation, Timer, Economy lamps operate as follows according to the error contents.

Error Contents	Indoor Unit Display			Wired Remote Controller Display	Trouble shooting
	Operation (Green)	Timer (Orange)	Economy (Green)		
Serial Communication Error	1 times	1 times	Continuous	11	1,2
Wired Remote Controller Communication Error	1 times	2 times	Continuous	12	3
Unit number or Refrigerant circuit address setting error	2 times	1 times	Continuous	21	4
Indoor Unit Capacity Error	2 times	2 times	Continuous	22	5
Connecting Nuber of Indoor Unit Error	2 times	4 times	Continuous	24	6
Address Setting Error Dual Address Number is Existing	2 times	6 times	Continuous	26	7
Indoor Unit Model Information Error EEPROM Access Abnormal	3 times	2 times	Continuous	32	8
Manual Auto Switch Error	3 times	5 times	Continuous	35	9
Indoor Room Thermistor Error	4 times	1 times	Continuous	41	10
Indoor Heat Ex. Thermistor Error	4 times	2 times	Continuous	42	11
Indoor Unit Fan Motor Error	5 times	1 times	Continuous	51	12
Drain Pump Error	5 times	3 times	Continuous	53	13
Damper Error	5 times	7 times	Continuous	57	14,15
Outdoor Unit Model Information Error EEPROM Error	6 times	2 times	Continuous	62	16
Active Filter Error	6 times	4 times	Continuous	64	17
IPM Error	6 times	5 times	Continuous	65	18
Discharge Thermistor Error	7 times	1 times	Continuous	71	19
Compressor Thermistor Error	7 times	2 times	Continuous	72	20
Heat Ex. Thermistor Error (OUT)	7 times	3 times	Continuous	73	21
Outdoor Thermistor Error	7 times	4 times	Continuous	74	22
2-Way Valve Thermistor Error	7 times	6 times	Continuous	76	23
3-Way Valve Thermistor Error	7 times	6 times	Continuous	76	24
Heatsink Thermistor Error	7 times	7 times	Continuous	77	25
CT Error	8 times	4 times	Continuous	84	26
High Pressure Sensor Error	8 times	6 times	Continuous	86	27
Over Current Error	9 times	4 times	Continuous	94	28
Compressor Control Error	9 times	5 times	Continuous	95	29
Outdoor Unit Fan Motor Error	9 times	7 times	Continuous	97	30
4-Way Valve Error	9 times	9 times	Continuous	99	31
Discharge Temp. Error	10 times	1 times	Continuous	A1	32
Compressure Temp. Error	10 times	3 times	Continuous	A3	33
Poor Refrigerant Circulation	10 times	8 times	Continuous	A8	34

2-1-2 WIRED REMOTE CONTROLLER DISPLAY

1. SELF - DIAGNOSIS

When " Er " in Temperature Display is displayed, inspection of the air conditioning system is necessary. Please consult authorized service personnel.

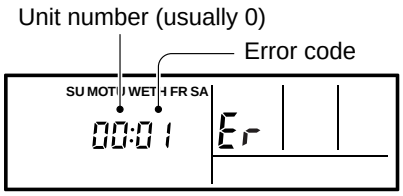

ex. Self-diagnosis check

2. ERROR CODE HISTORY DISPLAY

Up to 16 memorized error codes may be displayed for the indoor unit connected to the remote controller.

1. Stop the air conditioner operation.

2. Press the SET TEMPERATURE buttons ∨, ∧ simultaneously for 3 seconds or more to start the self-diagnosis.

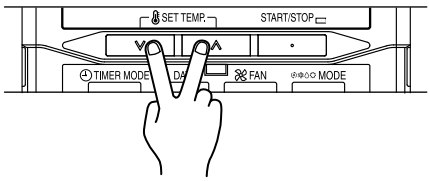

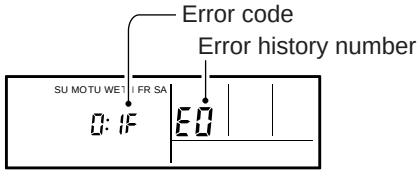

3. Press the SET TEMPERATURE button to select the error history number.

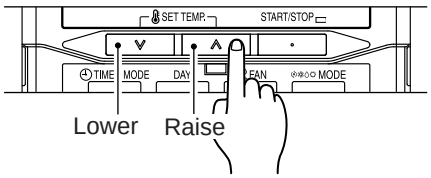

0 ↔ 1 ↔ 2 ↔ 3 ↔ 4 ↔ 5 ↔ 6 ↔ 7
F ↔ E ↔ d ↔ c ↔ b ↔ A ↔ 9 ↔ 8

4. Press the SET TEMPERATURE buttons ∨, ∧ simultaneously for 3 seconds or more or there is no key input for 60 seconds to stop the display.

2-1-3 OUTDOOR UNIT DISPLAY

1. ERROR DISPLAY

Error Contents	LED1	LED2	LED3	LED4	Trouble shooting
Serial communication error (Outdoor unit to Indoor unit A)	● 1 time	OFF	OFF	OFF	2
Serial communication error (Outdoor unit to Indoor unit B)	OFF	● 1 time	OFF	OFF	
Serial communication error (Outdoor unit to Indoor unit C)	OFF	OFF	● 1 time	OFF	
Serial communication error (Outdoor unit to Indoor unit D)	OFF	OFF	OFF	● 1 time	
Discharge thermistor error	● 2 times	OFF	OFF	OFF	19
Heat ex. thermistor error	● 3 times	OFF	OFF	OFF	21
Outdoor thermistor error	● 4 times	OFF	OFF	OFF	22
2-way valve thermistor error (for Indoor unit A)	● 5 times	OFF	OFF	OFF	23
2-way valve thermistor error (for Indoor unit B)	OFF	● 5 times	OFF	OFF	
2-way valve thermistor error (for Indoor unit C)	OFF	OFF	● 5 times	OFF	
2-way valve thermistor error (for Indoor unit D)	OFF	OFF	OFF	● 5 times	
3-way valve thermistor error (for Indoor unit A)	● 6 times	OFF	OFF	OFF	24
3-way valve thermistor error (for Indoor unit B)	OFF	● 6 times	OFF	OFF	
3-way valve thermistor error (for Indoor unit C)	OFF	OFF	● 6 times	OFF	
3-way valve thermistor error (for Indoor unit D)	OFF	OFF	OFF	● 6 times	
Compressor thermistor error	● 7 times	OFF	OFF	OFF	20
Heat sink thermistor error	● 8 times	OFF	OFF	OFF	25
High pressure switch 1 error	● 9 times	OFF	OFF	OFF	27
High pressure switch 2 error	● 10 times	OFF	OFF	OFF	
Indoor unit capactiy error	● 11 times	OFF	OFF	OFF	5
Over current error	● 12 times	OFF	OFF	OFF	28
Compressor control error	● 13 times	OFF	OFF	OFF	29
IPM error	● 14 times	OFF	OFF	OFF	18
Outdoor unit fan motor error	● 15 times	OFF	OFF	OFF	30
Outdoor unit PCB microcomputer communication error	● 17 times	OFF	OFF	OFF	16
Discharge temp. error	● 18 times	OFF	OFF	OFF	32
Compressor temp. error	● 19 times	OFF	OFF	OFF	33
4-way valve error	● 20 times	OFF	OFF	OFF	31
Outdoor unit PCB model information error	● 21 times	OFF	OFF	OFF	16
Active filter error	● 22 times	OFF	OFF	OFF	17

● : Flashing

2. ERROR DISPLAY METHOD

Outdoor LED Blink (1 to 22 times) 0.5sec ON / 0.5sec OFF blinking

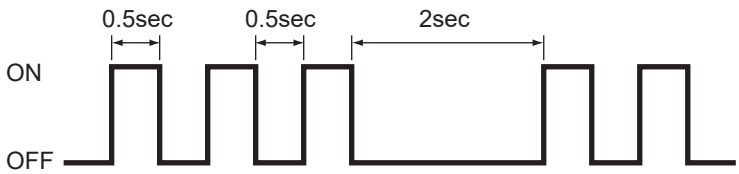

2-2 TROUBLESHOOTING WITH ERROR CODE

Troubleshooting 1 **OUTDOOR UNIT Error Method:** **Serial Communication Error** **(Serial Reverse Transfer Error)**	**Indicate or Display:** **Outdoor Unit : No indication** **Indoor Unit : Operation lamp: 1 time Flash, Timer lamp: 1 time Flash** **Economy lamp: Continuous flash.** **ERROR CODE : [E : 11]**

Detective Actuators: Outdoor unit Main PCB Outdoor unit Fan motor	**Detective details:** When the indoor unit cannot receive the serial signal from Outdoor unit more than 2minutes after power ON, or the indoor unit cannot receive the serial signal more than 15seconds during normal operation.

Forecast of Cause:

1. Connection failure 2. External cause 3. Main PCB failure 4. Active filter module failure
5. Power supply PCB failure 6. Outdoor unit Fan motor failure

Check Point 1-1 : Reset the power and operate

・Does error indication reappear?

NO → **Check Point 1-2 : Check external cause such as noise**

・Check if the ground connection is proper.
・Check if there is any equipment that causes harmonic wave near the power cable (Neon light bulb or any electronic equipment which causes harmonic wave).

YES ↓

Check Point 2 : Check connection

・Check any loose or removed connection line of between indoor unit and outdoor unit.
>> If there is an abnormal condition, correct it by referring to Installation Manual or Data & Technical Manual.
・Check connection condition in control unit.
(If there is loose connector, open cable or miss-wiring)

OK ↓

Check Point 3 : Check the voltage of power supply

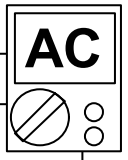

・Check the voltage of power supply
>> Check if AC187V(AC208V-10%) - 253V(AC230V+10%) appears at outdoor unit terminal L1 - L2.

OK ↓

Check Point 4 : Check serial signal (Reverse transfer signal)

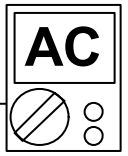

・Check serial signal (Reverse transfer signal)
>> Check if indicated value swings between AC90V and AC270V at outdoor unit terminal 1 - 3.
>> If it is abnormal, Check the parts as follows.
- Outdoor unit fan motor (PARTS INFORMATION 5)
- Active filter module (PARTS INFORMATION 6)
- Power supply PCB (Check the wire of CN34)
>> If Outdoor fan motor is abnormal, replace Outdoor unit fan motor and Main PCB.
>> If Active filter module is abnormal, replace it.
>> If the parts are normal, replace Main PCB.

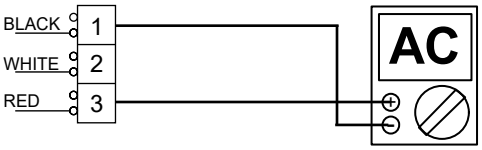

Trouble shooting 2 **INDOOR UNIT Error Method:** **Serial Communication Error** **(Serial Forward Transfer Error)**	**Indicate or Display:** **Outdoor Unit : LED 1 : 6 time Flash (for Indoor unit A)** **LED 2 : 6 time Flash (for Indoor unit B)** **LED 3 : 6 time Flash (for Indoor unit C)** **LED 4 : 6 time Flash (for Indoor unit D)** **Indoor Unit : Operation lamp: 1 time Flash, Timer lamp: 1 time Flash** **Economy lamp: Continuous flash.** **ERROR CODE : [E : 11]**

Detective Actuators:	**Detective details:**
Indoor unit Controller PCB	When the outdoor unit cannot properly receive the serial signal from indoor unit for 15 seconds or more.

Forecast of Cause:

1. Connection failure 2. External cause 3. Controller PCB failure

Check Point 1-1 : Reset the power and operate

・Does error indication reappear?

NO → **Check Point 1-2 : Check external cause such as noise**

・Check if the ground connection is proper.
・Check if there is any equipment that causes harmonic wave near the power cable (Neon light bulb or any electronic equipment which causes harmonic wave).

YES ↓

Check Point 2 : Check connection

・Check any loose or removed connection line of between indoor unit and outdoor unit.
>> If there is an abnormal condition, correct it by referring to Installation Manual or Data & Technical Manual.
・Check connection condition in control unit.
(If there is loose connector, open cable or miss-wiring)

OK ↓

Check Point 3 : Check the voltage of power supply

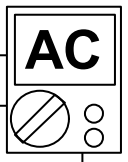

・Check the voltage of power supply
>> Check if AC187V(AC208V-10%) - 253V(AC230V+10%) appears at outdoor unit terminal L1 - L2.

OK ↓

Check Point 4 : Check serial signal (Forward transfer signal)

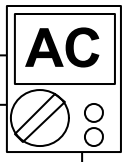

・Check Serial Signal (Forward Transfer Signal)
>> Check if Indicated value swings between AC30V and AC130V at Outdoor Unit Terminal 2 - 3.
>> If it is abnormal, replace Controller PCB.
>> If it is abnormal, Check Indoor unit fan motor. (PARTS INFORMATION 4)
>> If Indoor unit fan motor is abnormal, replace Indoor unit fan motor and Controller PCB.

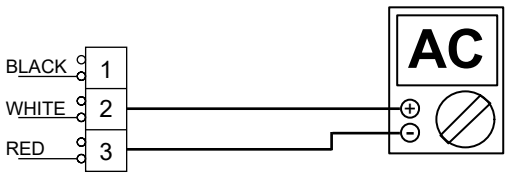

Trouble shooting 3 **INDOOR UNIT Error Method:** **Wired Remote Controller Communication Error**	**Indicate or Display:** **Outdoor Unit : No indication** **Indoor Unit : Operation lamp: 1 time Flash, Timer lamp: 2 time Flash Economy lamp: Continuous flash.** **ERROR CODE : [E : 12]**
Detective Actuators: Indoor unit Controller PCB Wired Remote Controller (Option)	**Detective details:** When the indoor unit cannot properly receive the signal from Wired Remote Controller for 1 minute or more.

Forecast of Cause:

1. Connection failure 2. Wired Remote Controller failure 3. Controller PCB failure

Check Point 1 : Check the connection of terminal

Check & correct the followings.

- Check the connection of terminal between Wired Remote Controller and indoor unit, and check if there is a disconnection of the cable.

OK

Check Point 2 : Check Wired Remote Controller and Controller PCB

- Check Voltage at terminal 1-3 of Controller PCB or Communication PCB. (Power supply to Remote Controller)
  Wall Mount Type : CN300 (UTY-TWRXZ2)
  Cassette Type, Duct Type : CN300
  Floor Type : CN6

>> If it is DC12V, Remote Controller is failure. (Controller PCB is normal) >> Replace Remote Controller
>> If it is DC 0V, Controller PCB is failure. (Check Remote Controller once again) >> Replace Controller PCB

Trouble shooting 4 **INDOOR UNIT Error Method:** **Unit number or Refrigerant circuit address setting error**	**Indicate or Display:** **Outdoor Unit : No indication** **Indoor Unit : Operation lamp: 2 time Flash,Timer lamp: 1 time Flash** **Economy lamp : Continuous flash.** **ERROR CODE : [E : 21]**
Detective Actuators: Indoor unit Controller PCB	**Detective details:** When the addresses set in indoor units are not consecutive in the same refrigerant circuit.

Forecast of Cause :

1. Dip SW incorrect setting 2. Controller PCB failure

Check Point 1 : Check the DIP-SW of Controller PCB setting

- Check the DIP-SW of controller setting.
  >> **If there is an abnormal condition, correct it by referring to Installation Manual or Data & Technical Manual.**
  >> **Upon correcting incorrect setting, reset the power.**

OK

Check Point 2 : Replace Controller PCB

▶ **If Check Point 1 do not improve the symptom, replace Controller PCB.**

Troubleshooting 5 **INDOOR UNIT Error Method:** **Indoor Unit Capacity Error** **Connecting indoor units capacity error** **Error at Indoor unit connection check**	**Indicate or Display:** **Outdoor Unit : LED 1 : 11 time Flash** **Indoor Unit : Operation lamp: 2 time Flash, Timer lamp: 2 time Flash** **Economy lamp: Continuous flash.** **ERROR CODE : [E : 22]**

Detective Actuators:	**Detective details:**
All indoor unit Outdoor unit Main PCB	▪ When error occurs during Indoor unit connection check

Forecast of Cause :
1. Indoor unit power supply defective
2 Indoor unit over connected
3.Communication line incorrect connection
4. Wrong Indoor unit address setting
5. Noise, momentary open

Check Point 1 : Check the indoor unit power supply

☐ Check the indoor unit power supply

↓ **OK**

Check Point 2 : Check the connectable number of Indor unit / connectable total capacity against the outdoor unit

☐ Check the each limitations in the Design and Technical manual.

↓ **OK**

Check Point 3 : Check the communication line connection

Check if communication line is correctly connected
☐ Is it uncoupled or cut halfway ?
☐ Connecting terminal position is correct as the installation manual shows ?

↓ **OK**

Check Point 4 : Check indoor unit address setting

☐ Check if the same indoor unit address number are not existing in the same refrigerant address number.

↓ **OK**

Check Point 5 : Check noise, momentary open, voltage drop

☐ Check if power supply temporarily stops by outages or if strong noise is generated from surrounding environment during auto address

↓ **OK**

Retry Indoor unit connection check

See page 11.

↓ **OK**

Replace Main PCB of Outdoor unit.

Troubleshooting 6 **INDOOR UNIT Error Method:** Connecting number of indoor unit error Error at indoor unit connection check	**Indicate or Display:** Outdoor Unit : No indication Indoor Unit : Operation lamp: 2 time Flash, Timer lamp: 4 time Flash Economy lamp: Continuous flash. ERROR CODE : [E : 24]

Detective Actuators:	**Detective details:**
All indoor unit Outdoor unit Main PCB	▪ When error occurs during Indoor unit connection check

Forecast of Cause :
1. Indoor unit power supply defective
2 Indoor unit over connected
3.Communication line incorrect connection
4. Wrong Indoor unit address setting
5. Noise, momentary open

Check Point 1 : Check the indoor unit power supply

☐ Check the indoor unit power supply

↓ OK

Check Point 2 : Check the connectable number of Indor unit / connectable total capacity against the outdoor unit

☐ Check the each limitations in the Design and Technical manual.

↓ OK

Check Point 3 : Check the communication line connection

Check if communication line is correctly connected
☐ Is it uncoupled or cut halfway ?
☐ Connecting terminal position is correct as the installation manual shows ?

↓ OK

Check Point 4 : Check indoor unit address setting

☐ Check if the same indoor unit address number are not existing in the same refrigerant address number.

↓ OK

Check Point 5 : Check noise, momentary open, voltage drop

☐ Check if power supply temporarily stops by outages or if strong noise is generated from surrounding environment during auto address

↓ OK

Retry Indoor unit connection check

See page 11.

↓ OK

Replace Main PCB of Outdoor unit.

Troubleshooting 7 **INDOOR UNIT Error Method:** **Address setting error.** **Dual address number is existing.** **Error at indoor unit connection check.**	**Indicate or Display:** **Outdoor Unit : No indication** **Indoor Unit : Operation lamp: 2 time Flash, Timer lamp: 6 time Flash** **Economy lamp: Continuous flash.** **ERROR CODE : [E : 26]**

Detective Actuators:	**Detective details:**
All indoor unit Outdoor unit Main PCB	▪ When error occurs during Indoor unit connection check

Forecast of Cause :
1. Indoor unit power supply defective
2 Indoor unit over connected
3.Communication line incorrect connection
4. Wrong Indoor unit address setting
5. Noise, momentary open

Check Point 1 : Check the indoor unit power supply

☐ Check the indoor unit power supply

↓ **OK**

Check Point 2 : Check the connectable number of Indor unit / connectable total capacity against the outdoor unit

☐ Check the each limitations in the Design and Technical manual.

↓ **OK**

Check Point 3 : Check the communication line connection

Check if communication line is correctly connected
☐ Is it uncoupled or cut halfway ?
☐ Connecting terminal position is correct as the installation manual shows ?

↓ **OK**

Check Point 4 : Check indoor unit address setting

☐ Check if the same indoor unit address number are not existing in the same refrigerant address number.

↓ **OK**

Check Point 5 : Check noise, momentary open, voltage drop

☐ Check if power supply temporarily stops by outages or if strong noise is generated from surrounding environment during auto address

↓ **OK**

Retry Indoor unit connection check

See page 11.

↓ **OK**

Replace Main PCB of Outdoor unit.

Indoor unit connection check

● SWITCH POSITION

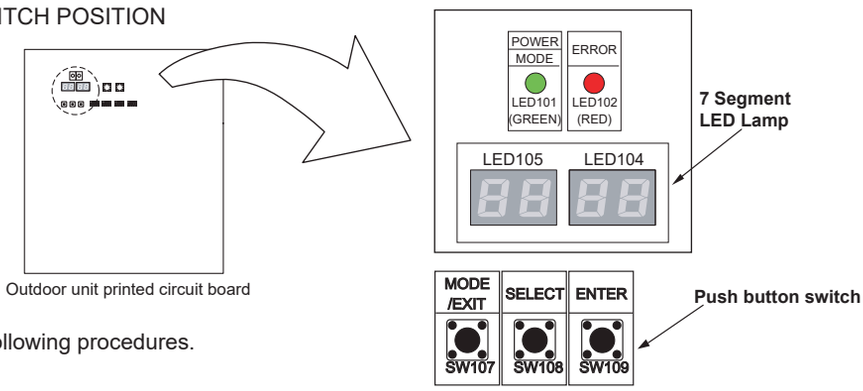

Please perform the indoor unit connection check according to following procedures.

- Turn on the power of indoor unit and outdoor unit.

LED105 LED104

MODE/EXIT

F 1

Set to Function mode [F3].

SELECT

F 2

SELECT

(When [F4] to [F9] are displayed, continue to press the "SELECT" button until [F3] is displayed.)

F 3

ENTER

0 0 - -

SELECT

Press the "SELECT" button until "12" is displayed.

1 2 - -

ENTER

- Press the "ENTER" button for more than 3 seconds.

F A I L

When indoor unit connection check can not be performed

r U n

- This will be displayed when the Indoor unit connection check starts.

(*1)

U 8

- Confirm the number of connected indoor units and the volume ratio of the indoor units connection.

SELECT

(*1) The number of connected indoor units
Ex.) When 8 units are connected

ENTER

(*2)

C 1 2 0

(*2) Volume ratio of the indoor units connection
Ex.) When the ratio is 120%

ENTER

- Exit indoor unit connection check mode.

When error occurs

P A S S

E r r ↔ 2

Please refer to the following “Error code” for details

[Note] Error code
22.1: Connecting Indoor units capacity error
24.2: Connecting number of indoor unit error
26.1: Dual address number is existing
Other Error code: Refer to the Trouble shooting

ENTER

1 2 - -

MODE/EXIT

When it finishes normally, nothing will be displayed on 7 segment display.

Troubleshooting 8 **INDOOR UNIT Error Method:** **Indoor Unit Model Information Error** **EEPROM Access Abnormal**	**Indicate or Display:** **Outdoor Unit : No indication** **Indoor Unit : Operation lamp: 3 time Flash, Timer lamp: 2 time Flash** **Economy lamp: Continuous flash.** **ERROR CODE : [E : 32]**

Detective Actuators:	**Detective details:**
Indoor unit Controller PCB	When power is on and there is some below case. ① When model information of EEPROM is incorrect. ② When the access to EEPROM failed.

Forecast of Cause:

1. External cause 2. Defective connection of electric components 3. Controller PCB failure

Check Point 1-1 : Reset Power Supply and operate

・Does Error indication show again?

NO → **Check Point 1-2 : Check external cause such as noise**

・Check if the ground connection is proper.
・Check if there is any equipment that causes harmonic wave near the power cable (Neon light bulb or any electronic equipment which causes harmonic wave).

YES ↓

Check Point 2 : Check Indoor unit electric components

・Check all connectors.
(loose connector or incorrect wiring)
・Check any shortage or corrosion on PCB.

↓

Check Point 3 : Replace Controller PCB

▶ **Change Controller PCB.**

Note : EEPROM

EEPROM(Electronically Erasable and Programmable Read Only Memory) is a non-volatile memory which keeps memorized information even if power is turned off. It can change the contents electronically.
To change the contents, it uses higher voltage than normal, and it can not change a partial contents. (Rewriting shall be done upon erasing the all contents.)
There is a limit in a number of rewriting.

Troubleshooting 9 **INDOOR UNIT Error Method:** **Manual Auto Switch Error**	**Indicate or Display:** **Outdoor Unit : No indication** **Indoor Unit : Operation lamp: 3 time Flash, Timer lamp: 5 time Flash** **Economy lamp: Continuous flash.** **ERROR CODE : [E : 35]**
Detective Actuators: Indoor Unit Controller PCB Indicator PCB Manual Auto Switch	**Detective details:** When the Manual Auto Switch becomes ON for consecutive 60 or more seconds.

Forecast of Cause :

1. Manual Auto Switch failure 2. Controller PCB and Indicator PCB failure

Check Point 1 : Check the Manual Auto Switch

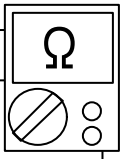

・Check if Manual Auto Switch is kept pressed.
・Check ON/OFF switching operation by using a meter.
>> If Manual Auto Switch is disabled (on/off switching), replace it.

OK

Check Point 2 : Replace Controller PCB and Indicator PCB

▶ **If Check Point 1 do not improve the symptom, replace Controller PCB and Indicator PCB.**

Trouble shooting 10 **INDOOR UNIT Error Method:** **Indoor Room Thermistor Error**	**Indicate or Display:** **Outdoor Unit : No indication** **Indoor Unit : Operation lamp: 4 time Flash, Timer lamp: 1 time Flash** **Economy lamp: Continuous flash.** **ERROR CODE : [E : 41]**

Detective Actuators:	**Detective details:**
Indoor unit controller PCB circuit Room temperature thermistor	Room temperature thermistor is open or short is detected always.

Forecast of Cause:

1. Connector failure connection 2. Thermistor failure 3. Controller PCB failure

Test 1 : Check connection of Connector

- Check if connector is loose or removed
- Check erroneous connection
- Check if thermistor cable is open

>>Reset Power when reinstalling due to removed connector or incorrect wiring.

OK

Test 2 : Remove connector and check Thermistor resistance value

Thermistor Characteristics (Rough value)

Temperature (°C)	-10	0	10	20	30	40	45
Temperature (°F)	14	32	50	68	86	104	113
Resistance Value (kΩ)	58.25	33.62	20.17	12.54	8.04	5.30	4.35

▶ **If Thermistor is either open or shorted, replace it and reset the power.**

OK

Test 3 : Check voltage of Controller PCB (DC5.0V)

Make sure circuit diagram of each indoor unit and check terminal voltage at Thermistor (DC5.0V)

- Compact wall mount circuit diagram(Connector connection)
- Wall mount circuit diagram (Direct soldering to PCB)

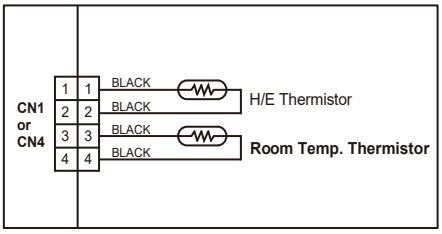

- Slim duct circuit diagram (Connector connection)
- Compact cassette circuit diagram (Connector connection)

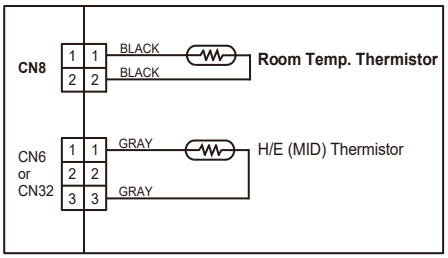

- Floor circuit diagram (Connector connection and Direct soldering to PCB)

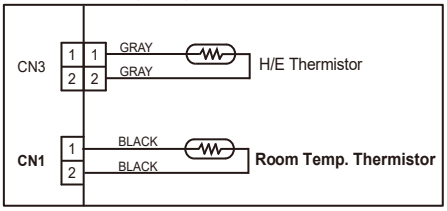

▶ **If the voltage does not appear, replace Controller PCB and execute the check operation again.**

Troubleshooting 11 **INDOOR UNIT Error Method:** **Indoor Heat Ex. Thermistor Error**	**Indicate or Display:** **Outdoor Unit : No indication** **Indoor Unit : Operation lamp: 4 time Flash, Timer lamp: 2 time Flash** **Economy lamp: Continuous flash.** **ERROR CODE : [E : 42]**

Detective Actuators:	**Detective details:**
Indoor unit controller PCB circuit Heat exchanger thermistor	Heat exchanger thermistor is open or short is detected always.

Forecast of Cause:

1. Connector failure connection 2. Thermistor failure 3. Controller PCB failure

Test 1 : Check connection of Connector

- Check if connector is loose or removed
- Check erroneous connection
- Check if thermistor cable is open

>>Reset Power when reinstalling due to removed connector or incorrect wiring.

OK

Test 2 : Remove connector and check Thermistor resistance value

Thermistor Characteristics (Rough value)

Temperature (°C)	-30	-20	-10	0	10	20	30	40	50
Temperature (°F)	-22	-4	14	32	50	68	86	104	122
Resistance Value (kΩ)	1131.91	579.59	312.27	176.03	103.34	62.91	39.57	25.64	17.06

Temperature (°C)	60	65
Temperature (°F)	140	149
Resistance Value (kΩ)	11.64	9.69

▶ **If Thermistor is either open or shorted, replace it and reset the power.**

OK

Test 3 : Check voltage of Controller PCB (DC5.0V)

Make sure circuit diagram of each indoor unit and check terminal voltage at Thermistor (DC5.0V)

- Compact wall mount circuit diagram(Connector connection)
- Wall mount circuit diagram (Direct soldering to PCB)

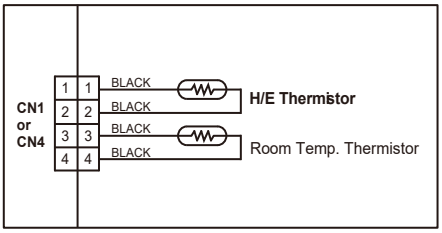

- Slim duct circuit diagram (Connector connection)
- Compact cassette circuit diagram (Connector connection)

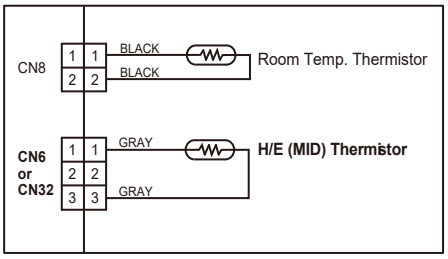

- Floor circuit diagram (Connector connection and Direct soldering to PCB)

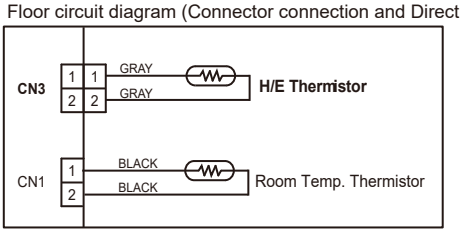

▶ **If the voltage does not appear, replace Controller PCB and execute the check operation again.**

Troubleshooting 12 **INDOOR UNIT Error Method:** **Indoor Unit Fan Motor Error**	**Indicate or Display:** **Outdoor Unit : No indication** **Indoor Unit : Operation lamp: 5 time Flash, Timer lamp: 1 time Flash** **Economy lamp: Continuous flash.** **ERROR CODE : [E : 51]**

Detective Actuators:	**Detective details:**
Indoor unit Controller PCB Indoor unit fan motor	When the condition that actual frequency of Indoor Fan is below 1/3 of target frequency is continued more than 56 seconds.

Forecast of Cause:

1. Fan rotation failure 2. Fan motor winding open 3. Motor protection by surrounding temperature rise
4. Control PCB failure 5. Indoor unit fan motor failure

Check Point 1 : Check rotation of Fan

・Rotate the fan by hand when operation is off.
(Check if fan is caught, dropped off or locked motor)
>>If Fan or Bearing is abnormal, replace it.

↓ **OK**

Check Point 2 : Check ambient temp. around motor

・Check excessively high temperature around the motor.
(If there is any surrounding equipment that causes heat)
>>Upon the temperature coming down, restart operation.

↓ **OK**

Check Point 3 : Check Indoor unit fan motor

・Check Indoor unit fan motor. (PARTS INFORMATION 4)
>>If Indoor unit fan motor is abnormal, replace Indoor unit fan motor.

↓ **OK**

Check Point 4 : Replace Controller PCB

▶ **If Check Point 1- 3 do not improve the symptom, replace Controller PCB.**

Troubleshooting 13 **INDOOR UNIT Error Method:** **Drain Pump Error**	**Indicate or Display:** **Outdoor Unit : No indication** **Indoor Unit : Operation lamp: 5 time Flash, Timer lamp: 3 time Flash** **Economy lamp: Continuous flash.** **ERROR CODE : [E : 53]**

Detective Actuators:	**Detective details:**
Indoor Unit Controller PCB Circuit Float Switch	When Float switch is ON for more than 3 minutes.

Forecast of Cause : 1. Float switch failure 2. Shorted connector/wire 3. Controller PCB failure
4. Drain pump failure 5. Hose clogging

Check Point 1 : Check Float Switch

- ☐ Check operation of float switch. (any blocking by dust, etc.)
- ☐ Remove Float switch and check ON/OFF switching operation by using a meter.
  >>If Float switch is abnormal, replace it.

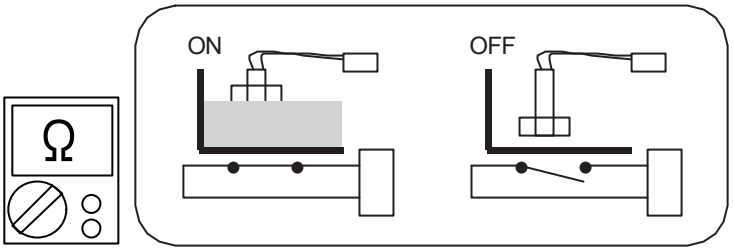

OK

Check Point 2 : Check Connector (CN 9) / Wire

- ☐ Check loose contact of CN9 /shorted wire (pinched wire).
  >>Replace Float switch if the wire is abnormal

OK

Check Point 3 : Check Drain Hose

- ☐ Check Drain Hose .
  >>If there is Hose clogging. Please clear the clog.

OK

Check Point 4 : Check Controller PCB

- **If Check Point 1 - 3 do not improve the symptom, change Controller PCB and execute the check operation again.**

Attention!!
Wall mount / Compact wall mount type does not have a float switch.
In this case, replace Controller PCB and set up the original address.
Please refer to.

Troubleshooting 14 **INDOOR UNIT Error Method:** **Damper(OPEN/CLOSE) Detection Limit Switch Error**	**Indicate or Display:** **Outdoor Unit : No indication** **Indoor Unit : Operation lamp: 5 time Flash, Timer lamp: 7 time Flash** **Economy lamp: Continuous flash.** **ERROR CODE : [E : 57]**

Detective Actuators:	**Detective details:**
Indoor unit Controller PCB Circuit Limit switch Damper	When limit switch were not able to detect the close though the damper close. (Upper air flow) When limit switch were not able to detect the open though the damper open. (Upper & Lower air flow)

Forecast of Cause :

1. Limit switch failure
2. Shorted connector/ wire
3. Damper faulure
4. Controller PCB failure

Check Point 1 : Check Limit switch

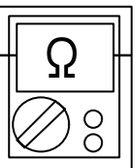

・Check operation of limit switch. (any blocking by dust, etc.)
・Remove Limit switch and check ON/OFF switching operation by using a meter.

>>If Limit switch is detective, replace it.

OK

Check Point 2 : Check Connector (CN18) / Wire

・Check loose contact of CN18 /shorted wire (pinched wire).

>>Replace Limit switch if the wire is abnormal

OK

Check Point 3 : Check Damper

・Check the obstruction of damper movement.
・Check the damper movement.

>>Replace Damper if the damper is abnormal

OK

Check Point 4 : Replace Controller PCB

▶ **If Check Point 1～3 do not improve the symptom, change Controller PCB.**

Troubleshooting 15 **INDOOR UNIT Error Method:** **Damper(OPEN/CLOSE) Simultaneous Detection Limit Switch Error**	**Indicate or Display:** **Outdoor Unit : No indication** **Indoor Unit : Operation lamp: 5 time Flash, Timer lamp: 7 time Flash** **Economy lamp: Continuous flash.** **ERROR CODE : [E : 57]**

Detective Actuators:	**Detective details:**
Indoor unit Controller PCB Circuit Limit switch	When the limit switch detects open and close at the simultaneous.

Forecast of Cause :

1. Limit switch failure
2. Shorted connector/ wire
3. Controller PCB failure

Check Point 1 : Check Limit switch

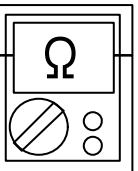

- Check operation of limit switch. (any blocking by dust, etc.)
- Remove Limit switch and check ON/OFF switching operation by using a meter.

>>If Limit switch is detective, replace it.

OK

Check Point 2 : Check Connector (CN18) / Wire

- Check loose contact of CN18 / shorted wire (pinched wire).

>>Replace Limit switch if the wire is abnormal

OK

Check Point 3 : Replace Controller PCB

▶ **If Check Point 1 & 2 do not improve the symptom, change Controller PCB.**

Trouble shooting 16 **OUTDOOR UNIT Error Method:** Outdoor Unit Model Information Error	**Indicate or Display:** Outdoor Unit : LED 1 : 17 time Flash or 21 time Flash Indoor Unit : Operation lamp: 6 time Flash, Timer lamp: 2 time Flash Economy lamp: Continuous flash. ERROR CODE : [E : 62]

Detective Actuators:	**Detective details:**
Outdoor unit Main PCB	When power is on and there is some below case. ① When model information of EEPROM is incorrect. ② When the access to EEPROM failed.

Forecast of Cause:

1. External cause 2. Defective connection of electric components 3. Main PCB failure

Check Point 1-1 : Reset Power Supply and operate

- Does Error indication show again?

NO → **Check Point 1-2 : Check external cause such as noise**

- Check if the ground connection is proper.
- Check if there is any equipment that causes harmonic wave near the power cable (Neon light bulb or any electronic equipment which causes harmonic wave).

YES ↓

Check Point 2 : Check Indoor unit electric components

- Check all connectors. (loose connector or incorrect wiring)
- Check any shortage or corrosion on PCB.

OK ↓

Check Point 3 : Replace Main PCB

▶ **If Check Point 1 - 2 do not improve the symptom, replace Main PCB.**

Note : EEPROM

EEPROM(Electronically Erasable and Programmable Read Only Memory) is a non-volatile memory which keeps memorized information even if power is turned off. It can change the contents electronically.
To change the contents, it uses higher voltage than normal, and it can not change a partial contents. (Rewriting shall be done upon erasing the all contents.)
There is a limit in a number of rewriting.

Trouble shooting 17 **OUTDOOR UNIT Error Method:** **Active Filter Error**	**Indicate or Display:** **Outdoor Unit : LED 1 : 22 time Flash** **Indoor Unit : Operation lamp: 6 time Flash, Timer lamp: 4 time Flash** **Economy lamp: Continuous flash.** **ERROR CODE : [E : 64]**

Detective Actuators:	**Detective details:**
Outdoor unit Main PCB Active filter module	① When inverter input DC voltage is higher than 425V or lower than 80V. ② When a momentary power cut off occurred on low voltage

Forecast of Cause :

1. External cause 2. Connector connection failure 3. Main PCB failure 4. Active filter module failure

Check Point 1 : Check external cause at Indoor and Outdoor (Voltage drop or Noise)

- Instant drop : Check if there is a large load electric apparatus in the same circuit.
- Momentary power failure : Check if there is a defective contact or leak current in the power supply circuit.
- Noise : Check if there is any equipment causing harmonic wave near electric line. (Neon bulb or electric equipment that may cause harmonic wave) Check the complete insulation of grounding.

OK

Check Point 2 : Check connection of Connector

- Check if connector is removed.
- Check erroneous connection.
- Check if cable is open.

>>Upon correcting the removed connector or miss-swiring, reset the power.

OK

Check Point 3 : Check Active filter module

- Check Active filter module. **(PARTS INFORMATION 6)**

>>If Active filter module is abnormal, replace it.

OK

Check Point 4 : Replace Main PCB

▶ **If Check Point 1 - 3 do not improve the symptom, change Main PCB.**

Troubleshooting 18 **OUTDOOR UNIT Error Method:** **IPM Error**	**Indicate or Display:** **Outdoor Unit : LED 1 : 14 time Flash** **Indoor Unit : Operation lamp: 6 time Flash, Timer lamp: 5 time Flash** **Economy lamp: Continuous flash.** **ERROR CODE : [E : 65]**

Detective Actuators:	**Detective details:**
Outdoor unit Main PCB Compressor	① When more than normal operating current to IPM in Main PCB flows, the compressor stops. ② After the compressor restarts, if the same operation is repeated within 40sec, the compressor stops again. ③ If ① and ②repeats 5 times, the compressor stops permanently.

Forecast of Cause :

1. Defective connection of electric components
2. Outdoor Fan Operation failure
3. Outdoor Heat Exchanger clogged
4. Compressor failure
5. Main PCB failure

Check Point 1 : Check connections of Outdoor Unit Electrical Components

- Check if the terminal connection is loose.
- Check if connector is removed.
- Check erroneous connection.
- Check if cable is open.

>>Upon correcting the removed connector or miss-wiring, reset the power.

OK

Check Point 2 : Check Outdoor Fan, Heat Exchanger

- Is there anything obstructing the air distribution circuit?
- Is there any clogging of Outdoor Heat Exchanger?
- Is the Fan rotating by hand when operation is off ?

>> If the Fan Motor is locked, replace it.

OK

Check Point 3 : Check Outdoor Fan

- Check Outdoor Fan Motor. (Refer to Trouble shooting 30)

>> If the Fan Motor is failure, replace it.

OK

Check Point 4 : Check Compressor

- Check Compressor. **(PARTS INFORMATION 2)**

OK

Check Point 5 : Replace Main PCB

▶ **If Check Point 1 - 4 do not improve the symptom, change Main PCB.**

Troubleshooting 19 **OUTDOOR UNIT Error Method:** **Discharge Thermistor Error**	**Indicate or Display:** **Outdoor Unit : LED 1 : 2 time Flash** **Indoor Unit : Operation lamp: 7 time Flash, Timer lamp: 1 time Flash** **Economy lamp: Continuous flash.** **ERROR CODE : [E : 71]**

Detective Actuators:	**Detective details:**
Outdoor Unit Main PCB Circuit Discharge Pipe Temperature Thermistor	When Discharge Pipe Temperature Thermistor open or short-circuit is detected at power ON or while running the compressor.

Forecast of Cause :

1. Connector connection failure 2.Thermistor failure 3. Main PCB failure

Check Point 1 : Check connection of Connector

- Check if connector is removed.
- Check erroneous connection.
- Check if thermistor cable is open.

>>Upon correcting the removed connector or miss-wiring, reset the power.

OK

Check Point 2 : Remove connector and check Thermistor resistance value

Thermistor Characteristics (Approx. value)

Temperature(°F)	32°F	41°F	50°F	59°F	68°F	86°F	104°F	122°F	140°F
Resistance Value (kΩ)	167.12	128.77	100.14	78.56	62.14	39.79	26.22	17.73	12.27

Temperature(°F)	158°F	176°F	194°F	212°F	248°F
Resistance Value (kΩ)	8.68	6.26	4.60	3.43	2.00

▶ **If Thermistor is either open or shorted, replace it and reset the power.**

OK

Check Point 3 : Check voltage of Main PCB (DC5.0V)

Make sure circuit diagram of outdoor unit and check terminal voltage at Thermistor (DC5.0V)

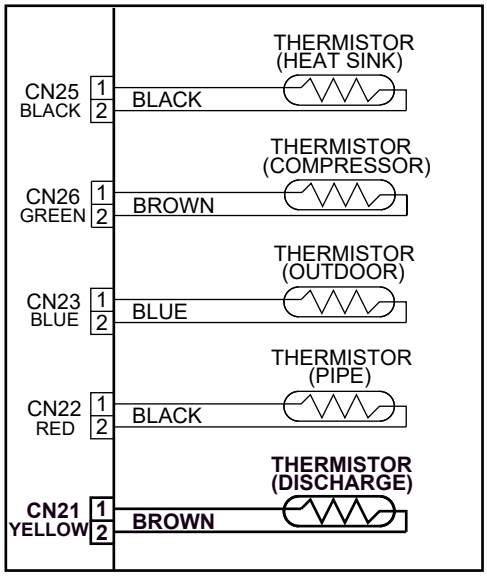

▶ **If the voltage does not appear, replace Main PCB.**

Troubleshooting 20 **OUTDOOR UNIT Error Method:** **Compressor Thermistor Error**	**Indicate or Display:** **Outdoor Unit : LED 1 : 7 time Flash** **Indoor Unit : Operation lamp: 7 time Flash, Timer lamp: 2 time Flash** **Economy lamp: Continuous flash.** **ERROR CODE : [E : 72]**

Detective Actuators:	**Detective details:**
Outdoor Unit Main PCB Circuit Compressor Temperature Thermistor	When Compressor Temperature Thermistor open or short-circuit is detected at power ON or while running the compressor.

Forecast of Cause :

1. Connector connection failure 2. Thermistor failure 3. Main PCB failure

Check Point 1 : Check connection of Connector

- Check if connector is removed.
- Check erroneous connection.
- Check if thermistor cable is open.

>>Upon correcting the removed connector or miss-wiring, reset the power.

OK

Check Point 2 : Remove connector and check Thermistor resistance value

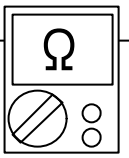

Thermistor Characteristics (Rough value)

Temperature(°F)	32°F	41°F	50°F	59°F	68°F	86°F	104°F	122°F	140°F
Resistance Value (kΩ)	168.60	129.84	100.91	79.12	62.55	40.01	26.34	17.79	12.30

Temperature(°F)	158°F	176°F	194°F	212°F	248°F
Resistance Value (kΩ)	8.70	6.27	4.60	3.43	2.00

▶ **If Thermistor is either open or shorted, replace it and reset the power.**

OK

Check Point 3 : Check voltage of Main PCB (DC5.0V)

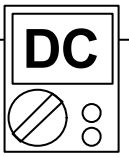

Make sure circuit diagram of outdoor unit and check terminal voltage at Thermistor (DC5.0V)

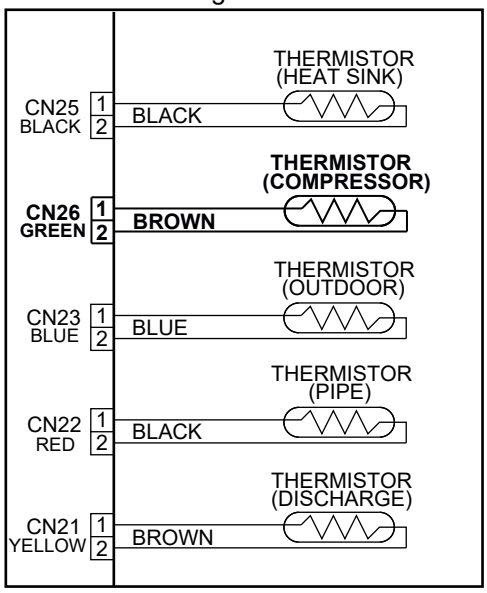

▶ **If the voltage does not appear, replace Main PCB.**

Troubleshooting 21 **OUTDOOR UNIT Error Method:** **Heat Ex. OUT Thermistor Error**	**Indicate or Display:** **Outdoor Unit : LED 1 : 3 time Flash** **Indoor Unit : Operation lamp: 7 time Flash, Timer lamp: 3 time Flash** **Economy lamp: Continuous flash.** **ERROR CODE : [E : 73]**

Detective Actuators:	**Detective details:**
Outdoor Unit Main PCB Circuit Heat Exchanger Temperature Thermistor	When Heat Exchanger Temperature Thermistor open or short-circuit is detected at power ON or while running the compressor.

Forecast of Cause :

1. Connector connection failure 2.Thermistor failure 3. Main PCB failure

Check Point 1 : Check connection of Connector

- Check if connector is removed.
- Check erroneous connection.
- Check if thermistor cable is open.

>>Upon correcting the removed connector or miss-wiring, reset the power.

OK

Check Point 2 : Remove connector and check Thermistor resistance value

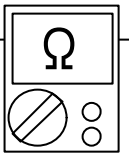

Thermistor Characteristics (Approx. value)

Temperature(°F)	14°F	23°F	32°F	41°F	50°F	59°F	68°C	77°F	86°F
Resistance Value (kΩ)	27.81	21.02	16.05	12.38	9.63	7.56	5.98	4.77	3.84

▶ **If Thermistor is either open or shorted, replace it and reset the power.**

OK

Check Point 3 : Check voltage of Main PCB (DC5.0V)

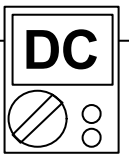

Make sure circuit diagram of outdoor unit and check terminal voltage at Thermistor (DC5.0V)

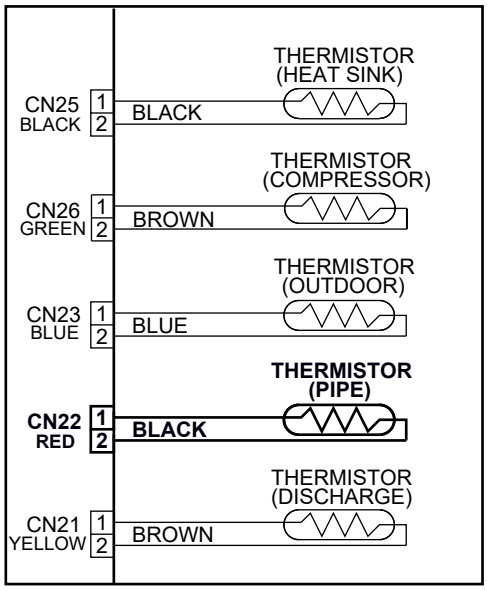

▶ **If the voltage does not appear, replace Main PCB.**

Troubleshooting 22 **OUTDOOR UNIT Error Method:** **Outdoor Thermistor Error**	**Indicate or Display:** **Outdoor Unit : LED 1 : 4 time Flash** **Indoor Unit : Operation lamp: 7 time Flash, Timer lamp: 4 time Flash** **Economy lamp: Continuous flash.** **ERROR CODE : [E : 74]**

Detective Actuators:	**Detective details:**
Outdoor Unit Main PCB Circuit Outdoor Temperature Thermistor	When Outdoor Temperature Thermistor open or short-circuit is detected at power ON or while running the compressor.

Forecast of Cause :

1. Connector connection failure 2.Thermistor failure 3. Main PCB failure

Check Point 1 : Check connection of Connector

- Check if connector is removed.
- Check erroneous connection.
- Check if thermistor cable is open.

>>Upon correcting the removed connector or miss-wiring, reset the power.

OK

Check Point 2 : Remove connector and check Thermistor resistance value

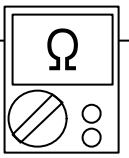

Thermistor Characteristics (Approx. value)

Temperature(°F)	-4°F	14°F	23°F	32°F	41°F	50°F	59°F	68°F
Resistance Value (kΩ)	115.24	62.28	46.58	35.21	26.88	20.72	16.12	12.64

Temperature(°F)	86°F	104°F	122°F	140°F	158°F
Resistance Value (kΩ)	7.97	5.18	3.45	2.36	1.65

▶ **If Thermistor is either open or shorted, replace it and reset the power.**

OK

Check Point 3 : Check voltage of Main PCB (DC5.0V)

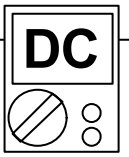

Make sure circuit diagram of outdoor unit and check terminal voltage at Thermistor (DC5.0V)

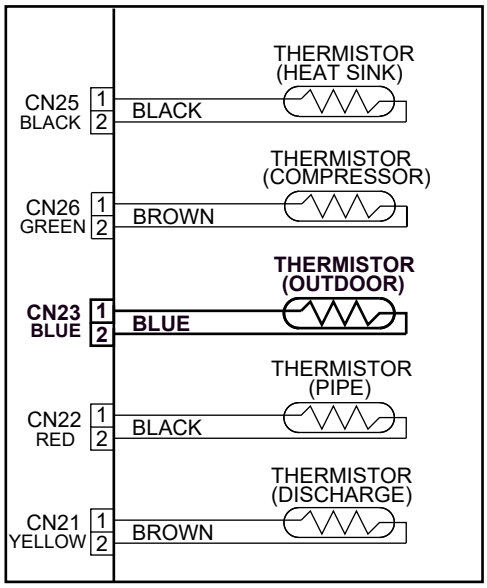

▶ **If the voltage does not appear, replace Main PCB.**

Troubleshooting 23 **OUTDOOR UNIT Error Method:** **2-Way Valve Thermistor Error**	**Indicate or Display:** **Outdoor Unit : LED 1 : 5 time Flash (for Indoor unit A)** **LED 2 : 5 time Flash (for Indoor unit B)** **LED 3 : 5 time Flash (for Indoor unit C)** **LED 4 : 5 time Flash (for Indoor unit D)** **Indoor Unit : Operation lamp: 7 time Flash, Timer lamp: 6 time Flash** **Economy lamp: Continuous flash.** **ERROR CODE : [E : 76]**

Detective Actuators:	**Detective details:**
Outdoor Unit Main PCB Circuit 2-way valve Temperature Thermistor	When 2-way valve Temperature Thermistor open or short-circuit is detected at power ON or while running the compressor.

Forecast of Cause :

1. Connector connection failure 2.Thermistor failure 3. Main PCB failure

Check Point 1 : Check connection of Connector

- Check if connector is removed.
- Check erroneous connection.
- Check if thermistor cable is open.

>>Upon correcting the removed connector or miss-wiring, reset the power.

OK

Check Point 2 : Remove connector and check Thermistor resistance value

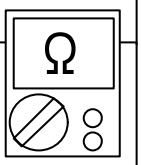

Thermistor Characteristics (Approx. value)

Temperature(°F)	14°F	23°F	32°F	41°F	50°F	59°F	68°F	86°F
Resistance Value (kΩ)	312.27	233.21	176.03	134.23	103.34	80.28	62.91	39.57

Temperature(°F)	104°F	122°F	140°F	158°F	176°F	194°F	212°F
Resistance Value (kΩ)	25.64	17.06	11.64	8.12	5.78	4.19	3.09

▶ **If Thermistor is either open or shorted, replace it and reset the power.**

OK

Check Point 3 : Check voltage of Main PCB (DC5.0V)

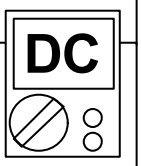

Make sure circuit diagram of outdoor unit and check terminal voltage at Thermistor (DC5.0V)

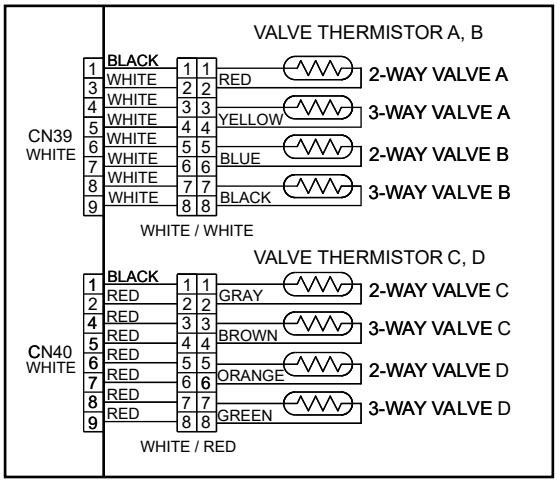

***AOU36 type (4 indoor units) : A,B,C,D.**
AOU24 type (3 indoor units) : A,B,C.
AOU18 type (2 indoor units) : A,B.

▶ **If the voltage does not appear, replace Main PCB.**

Troubleshooting 24 **OUTDOOR UNIT Error Method:** **3-Way Valve Thermistor Error**	**Indicate or Display:** **Outdoor Unit : LED 1 : 6 time Flash (for Indoor unit A)** **LED 2 : 6 time Flash (for Indoor unit B)** **LED 3 : 6 time Flash (for Indoor unit C)** **LED 4 : 6 time Flash (for Indoor unit D)** **Indoor Unit : Operation lamp: 7 time Flash, Timer lamp: 6 time Flash** **Economy lamp: Continuous flash.** **ERROR CODE : [E : 76]**

Detective Actuators:	**Detective details:**
Outdoor Unit Main PCB Circuit 3-way valve Temperature Thermistor	When 3-way valve Temperature Thermistor open or short-circuit is detected at power ON or while running the compressor.

Forecast of Cause :

1. Connector connection failure 2.Thermistor failure 3. Main PCB failure

Check Point 1 : Check connection of Connector

- Check if connector is removed.
- Check erroneous connection.
- Check if thermistor cable is open.

>>Upon correcting the removed connector or miss-wiring, reset the power.

OK

Check Point 2 : Remove connector and check Thermistor resistance value

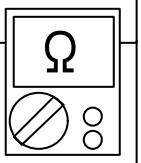

Thermistor Characteristics (Approx. value)

Temperature(°F)	14°F	23°F	32°F	41°F	50°F	59°F	68°F	86°F
Resistance Value (kΩ)	312.27	233.21	176.03	134.23	103.34	80.28	62.91	39.57

Temperature(°F)	104°F	122°F	140°F	158°F	176°F	194°F	212°F
Resistance Value (kΩ)	25.64	17.06	11.64	8.12	5.78	4.19	3.09

▶ **If Thermistor is either open or shorted, replace it and reset the power.**

OK

Check Point 3 : Check voltage of Main PCB (DC5.0V)

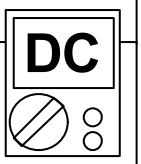

Make sure circuit diagram of outdoor unit and check terminal voltage at Thermistor (DC5.0V)

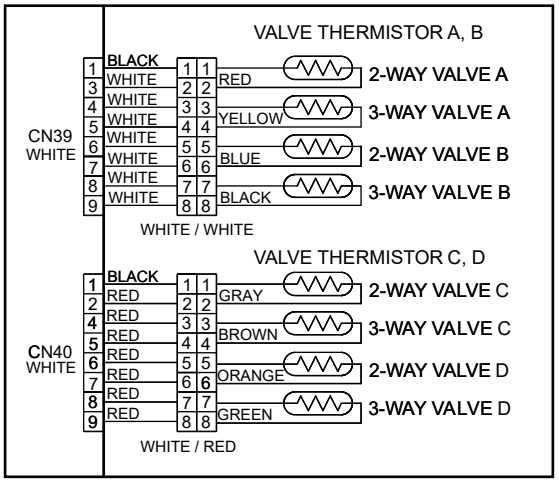

***AOU36 type (4 indoor units) : A,B,C,D.**
AOU24 type (3 indoor units) : A,B,C.
AOU18 type (2 indoor units) : A,B.

▶ **If the voltage does not appear, replace Main PCB.**

Troubleshooting 25 **OUTDOOR UNIT Error Method:** **Heat Sink Thermistor Error**	**Indicate or Display:** **Outdoor Unit : LED 1 : 8 time Flash** **Indoor Unit : Operation lamp: 7 time Flash, Timer lamp: 7 time Flash** **Economy lamp: Continuous flash.** **ERROR CODE : [E : 77]**

Detective Actuators:	**Detective details:**
Outdoor Unit Main PCB Circuit Heat Sink Temperature Thermistor	When Heat Sink Temperature Thermistor open or short-circuit is detected at power ON or while running the compressor.

Forecast of Cause :

1. Connector connection failure 2.Thermistor failure 3. Main PCB failure

Check Point 1 : Check connection of Connector

- Check if connector is removed.
- Check erroneous connection.
- Check if thermistor cable is open.

>>Upon correcting the removed connector or miss-wiring, reset the power.

OK

Check Point 2 : Remove connector and check Thermistor resistance value

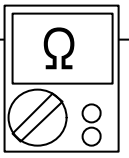

Thermistor Characteristics (Approx. value)

Temperature(°F)	-22°F	-4°F	14°F	32°F	50°F	68°F	86°F	104°F
Resistance Value (kΩ)	95.56	50.31	27.81	16.05	9.63	5.98	3.84	2.64

Temperature(°F)	122°F	140°F	158°F	176°F	194°F	212°F
Resistance Value (kΩ)	1.78	1.19	1.00	0.61	0.52	0.45

▶ **If Thermistor is either open or shorted, replace it and reset the power.**

OK

Check Point 3 : Check voltage of Main PCB (DC5.0V)

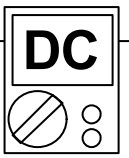

Make sure circuit diagram of outdoor unit and check terminal voltage at Thermistor (DC5.0V)

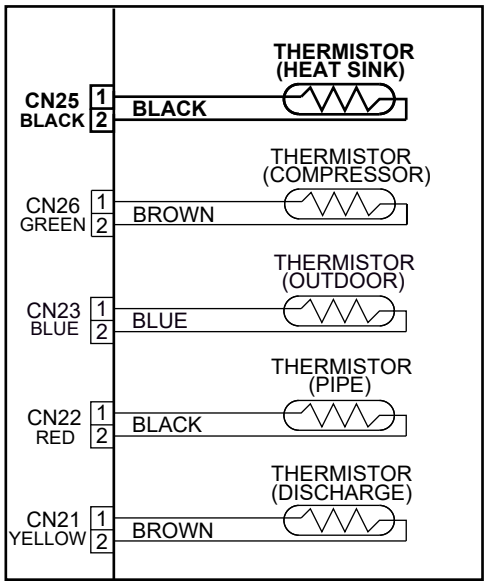

▶ **If the voltage does not appear, replace Main PCB.**

Troubleshooting 26 **OUTDOOR UNIT Error Method:** **CT Error (Over Current Error)**	**Indicate or Display:** **Outdoor Unit : No indication** **Indoor Unit : Operation lamp: 8 time Flash, Timer lamp: 4 time Flash** **Economy lamp: Continuous flash.** **ERROR CODE : [E : 84]**
Detective Actuators: Outdoor unit Main PCB Compressor	**Detective details:** "**Protection stop** by overcurrent generation after inverter compressor start processing completed" generated consecutively 10 times. * The number of generations is reset if the start-up of the compressor succeeds.

Forecast of Cause :
1. Outdoor Heat Exchanger clogged
2. Outdoor Fan Operation failure
3. Main PCB
4. Inverter compressor failure (lock, winding short)

Check Point 1 : Check ambient temp. around motor,Heat Exchanger

- Check excessively high temperature around the motor.
  (If there is any surrounding equipment that causes heat)
- Is there anything obstructing the air distribution circuit?
- Is there any clogging of Outdoor Heat Exchanger?

>>Upon the temperature coming down, restart operation.

↓ **OK**

Check Point 2 : Check Outdoor Fan

- Is the Fan rotating by hand when operation is off ?

>> If the Fan Motor is locked, replace it.

↓ **OK**

Check Point 3: Replace Main PCB

▶ **If Check Point 1,2 do not improve the symptom, change Main PCB.**

↓ **OK**

Check Point 4: Replace Compressor

▶ **If Check Point 3 do not improve the symptom, change Compressor.**

Troubleshooting 27 **OUTDOOR UNIT Error Method:** **High Pressure Switch Error**	**Indicate or Display:** **Outdoor Unit : LED 1 : 9 time Flash(SW1:CN37),10 time Flash(SW2:CN36)** **Indoor Unit : Operation lamp: 8 time Flash, Timer lamp: 6 time Flash** **Economy lamp: Continuous flash.** **ERROR CODE : [E : 86]**

Detective Actuators:	**Detective details:**
Outdoor Unit Main PCB Circuit Pressure Switch	When pressure switch open is detected in 10 seconds after the power is turned on.

Forecast of Cause :

1. Connector connection failure 2. Pressure Switch failure 3. Main PCB failure

Check Point 1 : Reset Power Supply and operate

・Does abnormal LED indication show again?

NO → Check Point 3

YES ↓

***AOU36 type is CN37 only.**

Check Point 2 : Check voltage of Main PCB (DC5.0V)

・Make sure circuit diagram of outdoor unit and check terminal voltage at Pressure Switch. (DC5.0V)

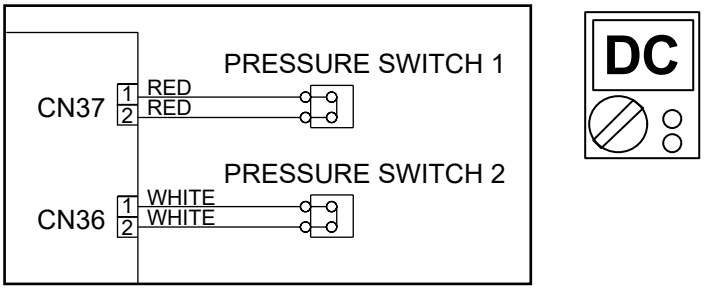

▶ **If the voltage does not appear, replace Main PCB.**

OK ↓

Check Point 3 : Check Pressure Switch

・Check if connector is loose or cable is open.
>> If no abnormal connection is found, replace Pressure Switch.

▶ **After replacing Pressure Switch, check operating condition and pressure in operation.**

・Characteristics of pressure switch

・PRESSURE SWITCH (CN37)

	Pressure switch
Contact : Short ⇒ Open	608.7 ± 14.5 PSI (4.2 ± 0.10 MPa)
Contact : Open ⇒ Short	463.8 ± 21.7 PSI (3.2 ± 0.15 MPa)

・PRESSURE SWITCH (CN36)

	Pressure switch
Contact : Short ⇒ Open	536.2 − 29.0 PSI (3.7 − 0.20 MPa)
Contact : Open ⇒ Short	420.1 ± 29.0 PSI (2.9 ± 0.20 MPa)

Troubleshooting 28 **OUTDOOR UNIT Error Method:** **Over Current Error**	**Indicate or Display:** **Outdoor Unit : LED 1 : 12 time Flash** **Indoor Unit : Operation lamp: 9 time Flash, Timer lamp: 4 time Flash** **Economy lamp: Continuous flash.** **ERROR CODE : [E : 94]**

Detective Actuators:	**Detective details:**
Outdoor unit Main PCB Compressor	"**Protection stop** by overcurrent generation after inverter compressor start processing completed" generated consecutively 10 times. * The number of generations is reset if the start-up of the compressor succeeds.

Forecast of Cause :
1. Outdoor Heat Exchanger clogged
2. Outdoor Fan Operation failure
3. Main PCB
4. Inverter compressor failure (lock, winding short)

Check Point 1 : Check ambient temp. around motor,Heat Exchanger

- Check excessively high temperature around the motor.
  (If there is any surrounding equipment that causes heat)
- Is there anything obstructing the air distribution circuit?
- Is there any clogging of Outdoor Heat Exchanger?

>>Upon the temperature coming down, restart operation.

↓ **OK**

Check Point 2 : Check Outdoor Fan

- Is the Fan rotating by hand when operation is off ?

>> If the Fan Motor is locked, replace it.

↓ **OK**

Check Point 3 : Replace Main PCB

▶ **If Check Point 1 - 2 do not improve the symptom, change Main PCB.**

↓ **OK**

Check Point 4 : Replace Compressor

▶ **If Check Point 3 do not improve the symptom, change Compressor.**

Troubleshooting 29 **OUTDOOR UNIT Error Method:** **Compressor Control Error**	**Indicate or Display:** **Outdoor Unit : LED 1 : 13 time Flash** **Indoor Unit : Operation lamp: 9 time Flash, Timer lamp: 5 time Flash** **Economy lamp: Continuous flash.** **ERROR CODE : [E : 95]**

Detective Actuators:	**Detective details:**
Outdoor unit Main PCB Compressor	① While running the compressor, if the detected rotor location is out of phase with actual rotor location more than 105°, the compressor stops. ② After the compressor restarts, if the same operation is repeated within 40sec, the compressor stops again. ③ If ① and ②repeats 5 times, the compressor stops permanently.

Forecast of Cause :

1. Defective connection of electric components 2. Main PCB failure 3. Compressor failure

Check Point 1 : Check connection of around the Compressor components

For Compressor Terminal, Main PCB

- Check if connector is removed.
- Check erroneous connection.
- Check if cable is open.
  (Refer to PARTS INFORMATION 2)

>>Upon correcting the removed connector or miss-wiring, reset the power.

OK

Check Point 2 : Replace Main PCB

▶ **If Check Point 1 do not improve the symptom, change Main PCB.**

OK

Check Point 3 : Replace Compressor

▶ **If Check Point 2 do not improve the symptom, change Compressor.**

Troubleshooting 30 **OUTDOOR UNIT Error Method:** **Outdoor Unit Fan Motor Error**	**Indicate or Display:** **Outdoor Unit : LED 1 : 15 time Flash** **Indoor Unit : Operation lamp: 9 time Flash, Timer lamp: 7 time Flash** **Economy lamp: Continuous flash.** **ERROR CODE : [E : 97]**

Detective Actuators:	**Detective details:**
Outdoor unit Main PCB Outdoor unit fan motor	① When outdoor fan rotation speed is less than 100rpm in 20 seconds after fan motor starts, fan motor stops. ② After fan motor restarts, if the same operation within 60sec is repeated 3 times in a row, compressor and fan motor stops. ③ If ① and ②repeats 5 times in a row, compressor and fan motor stops permanently.

Forecast of Cause:

1. Fan rotation failure 2. Motor protection by surrounding temperature rise 3. Main PCB failure
4. Outdoor unit fan motor failure

Check Point 1 : Check rotation of Fan

・Rotate the fan by hand when operation is off.
(Check if fan is caught, dropped off or locked motor)
>>If Fan or Bearing is abnormal, replace it.

OK

Check Point 2 : Check ambient temp. around motor

・Check excessively high temperature around the motor.
(If there is any surrounding equipment that causes heat)
>>Upon the temperature coming down, restart operation.

OK

Check Point 3 : Check Outdoor unit fan motor

・Check Outdoor unit fan motor. **(PARTS INFORMATION 5)**
>>If Outdoor Fan Motor is abnormal, replace Outdoor fan motor and Main PCB.

OK

Check Point 4 : Check Output Voltage of Main PCB

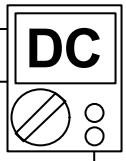

・Check outdoor unit circuit diagram and the voltage. (Measure at Main PCB side connector)

For AOU18 / 24RLXFZ

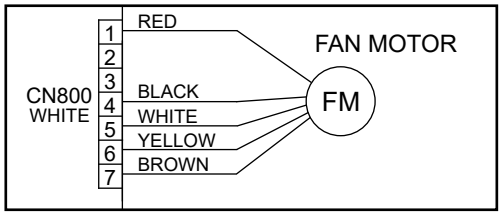

Read wire	DC voltage
Red - Black	300 - 400V
White - Black	15±1.5V

For AOU36RLXFZ

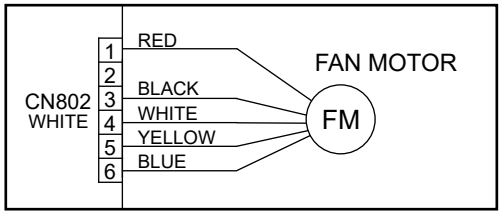

▶ **If the voltage is not correct, replace Main PCB.**

Troubleshooting 31 **OUTDOOR UNIT Error Method:** **4-Way Valve Error**	**Indicate or Display:** **Outdoor Unit : LED 1 : 20 time Flash** **Indoor Unit : Operation lamp: 9 time Flash, Timer lamp: 9 time Flash** **Economy lamp: Continuous flash.** **ERROR CODE : [E : 99]**

Detective Actuators:	**Detective details:**
Indoor unit Controller PCB Heat exchanger temperature thermistor Room temperature thermistor 4-way valve	When the indoor heat exchanger temperature is compared with the room temperature, and either following condition is detected continuously two times, the compressor stops. ・Cooling or Dry operation [Indoor heat exchanger temp.] - [Room temp.] > 20°F(10°C) ・Heating operation [indoor heat exchanger temp.] - [Room temp.] < -20°F(-10°C) If the same operation is repeated 5 times, the compressor stops permanently.

Forecast of Cause :

1. Connector connection failure 2. Thermistor failure 3. Coil failure 4. 4-way valve failure
5. Main PCB failure 6. Controller PCB failure

Check Point 1 : Check connection of Connector

・Check if connector is removed.
・Check erroneous connection.
・Check if thermistor cable is open.
>> Upon correcting the removed connector or miss-wiring, reset the power.

OK

Check Point 2 : Check thermistor of Indoor unit

・Isn't it fallen off the holder?
・Is there a cable pinched?
> Check characteristics of thermistor, (Refer to Trouble shooting 10,11)
> If defective, replace the thermistor.

OK

Check Point 3 : Check the solenoid coil and 4-way valve

[Solenoid coil]
・Remove CN30 from PCB and check the resistance value of coil.
Resistance value is about 1.4kΩ
>> If it is Open or abnormal resistance value, replace Solenoid Coil.

[4-way valve]
・Check each piping temperature,
and the location of the valve by the temperature difference.
>> If the value location is not proper, replace 4-way valve.

OK

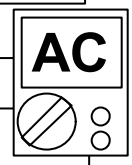

Check Point 4 : Check the voltage of 4-way valve

・Check the CN 30 voltage of Main PCB
Check if AC187V(AC208V-10%) - 253V(AC230V+10%) appears at CN 30 of Main PCB.
[Heating operation]
>> If it is not voltage, Replace Main PCB.
[Cooling operation]
>> If it is voltage, Replace Main PCB.

OK

Check Point 5 : Replace Controller PCB

▶ **If Check Point 1- 4 do not improve the symptom, replace Controller PCB of Indoor unit .**

Trouble shooting 32 **OUTDOOR UNIT Error Method:** Discharge Temp. Error	**Indicate or Display:** Outdoor Unit : LED 1 : 18 time Flash Indoor Unit : Operation lamp: 10 time Flash, Timer lamp: 1 time Flash Economy lamp: Continuous flash. ERROR CODE : [E : A1]

Detective Actuators:	**Detective details:**
Outdoor unit Main PCB Discharge temperature thermistor	"Protection stop by "discharge temperature ≧ 230°F(18/24type) / 239°F(36type) during compressor operation"" generated 2 times within 24 hours.

Forecast of Cause :
1. 3-way valve not opened
2. EEV defective, strainer clogged
3. Outdoor unit operation failure, foreign matter on heat exchanger
4. Discharge temperature thermistor failure
5. Insufficient refrigerant
6. Main PCB failure

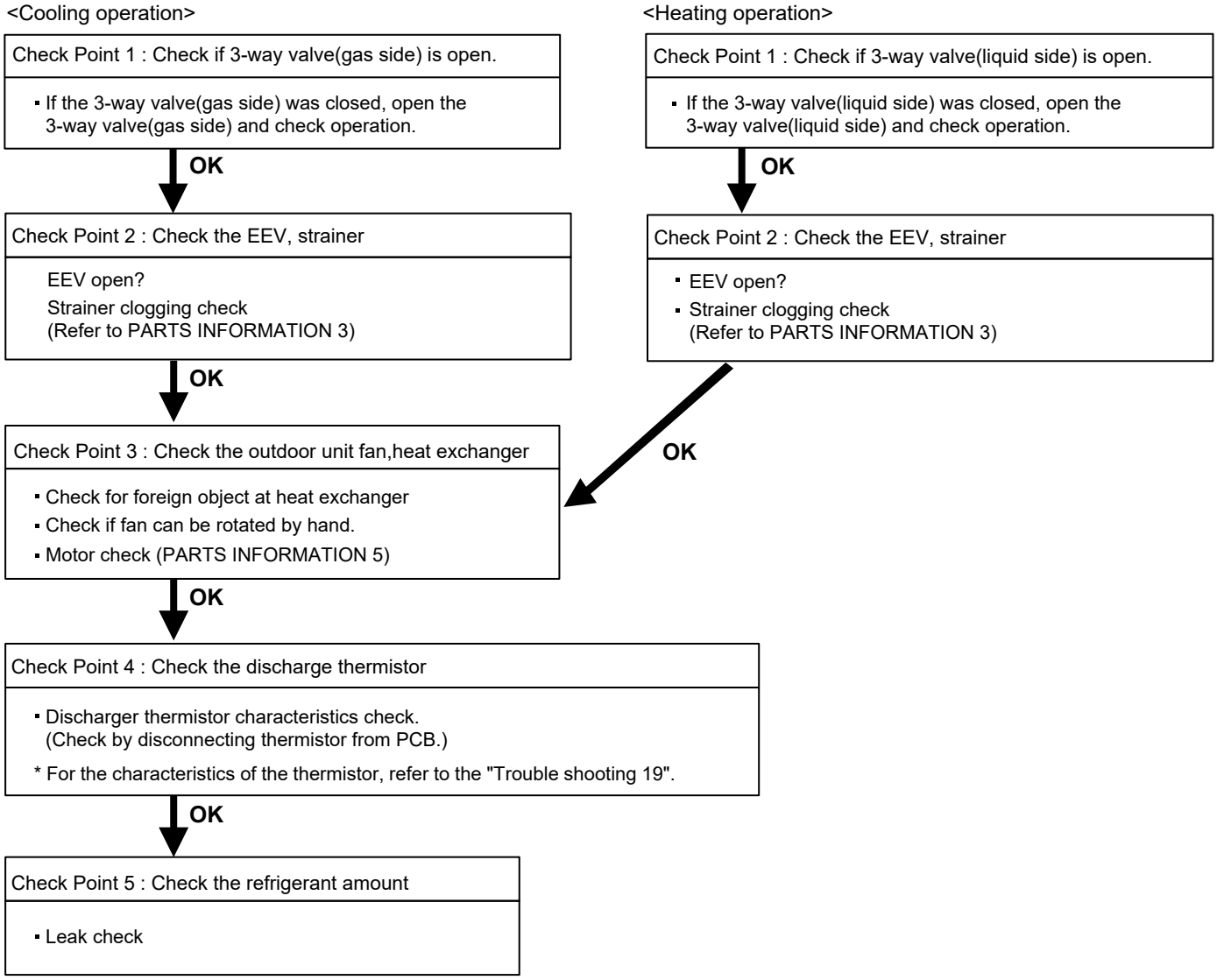

Trouble shooting 33 **OUTDOOR UNIT Error Method:** **Compressor Temp. Error**	**Indicate or Display:** **Outdoor Unit : LED 1 : 19 time Flash** **Indoor Unit : Operation lamp: 10 time Flash, Timer lamp: 3 time Flash** **Economy lamp: Continuous flash.** **ERROR CODE : [E : A3]**

Detective Actuators:	**Detective details:**
Compressor temperature thermistor	"Protection stop by "compressor temperature ≧ 230°F(18/24type)/257°F(36type) during compressor operation"" generated 2 times within 24 hours.

Forecast of Cause :
1. 3-way valve not opened
2. EEV defective, strainer clogged
3. Outdoor unit operation failure, foreign matter on heat exchanger
4. Compressor temperature thermistor failure
5. Insufficient refrigerant
6. Main PCB failure

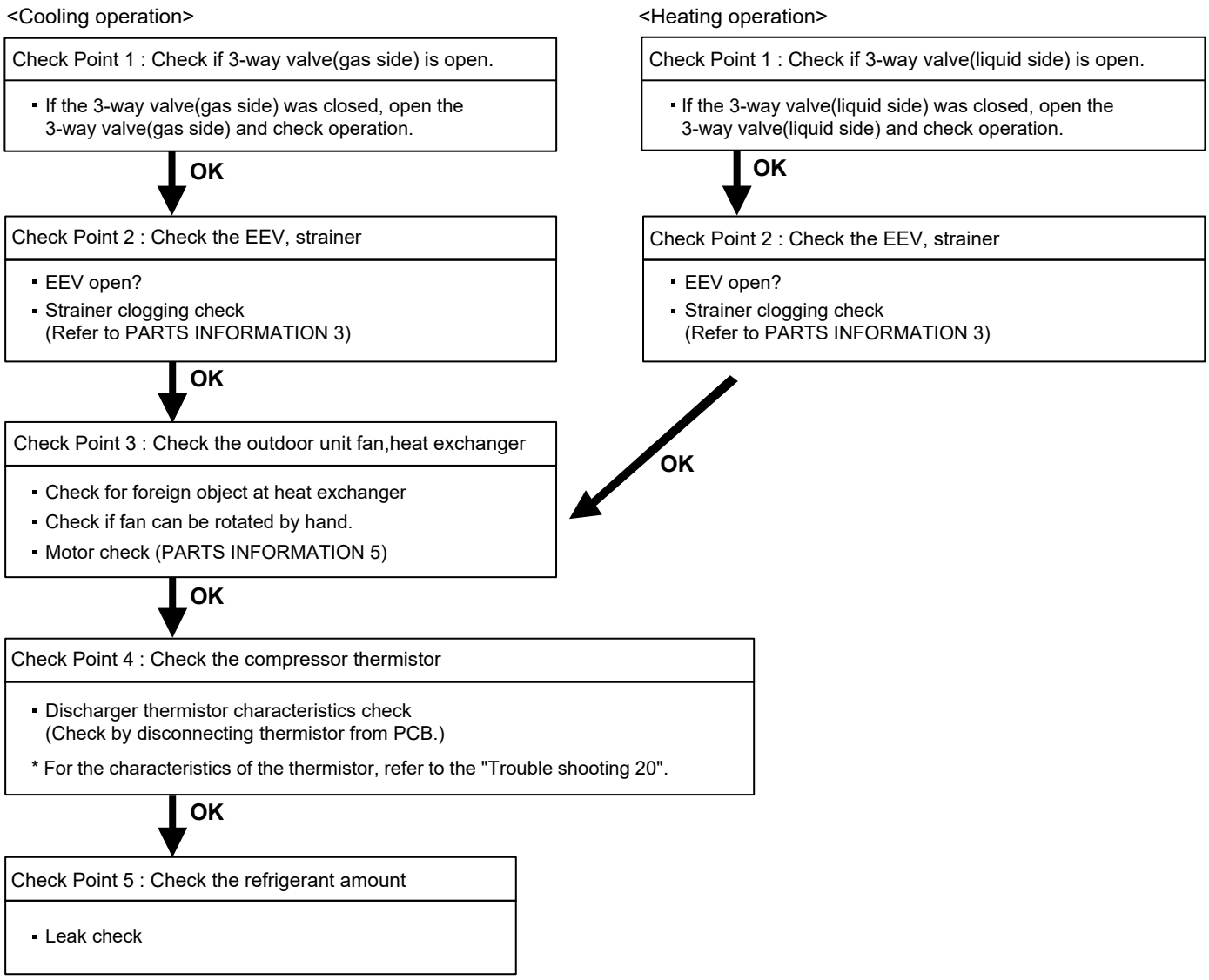

Troubleshooting 34 **INDOOR UNIT Error Method:** Poor refrigerant circulation	**Indicate or Display:** Outdoor Unit : No indication Indoor Unit : Operation lamp: 10 time Flash, Timer lamp: 8 time Flash Economy lamp: Continuous flash. ERROR CODE : [E : A8]

Detective Actuators:	**Detective details:**
Refrigerant leak detection device	Refrigerant leak detector (optional or locally purchased) operates to notify the refrigerant leak.

Forecast of Cause:

1. Refrigerant leak 2. Connection failure 3. Refrigerant leak detector failure
4. Controller PCB failure

Test 1 : Check for refrigerant leaks

Check if there is no refrigerant leak from the heat exchanger and the surrounding pipe connection.

↓ **OK**

Test 2 : Check refrigerant leak detector

Check the connection wiring (omission or disconnection) of the refrigerant leak detector.
Check the power of the refrigerant leak detector.
Check if the refrigerant leak detector is faulty.

↓ **OK**

Replace controller PCB

2-3 TROUBLE SHOOTING WITH NO ERROR CODE

Troubleshooting 35

Indoor Unit - No Power

Forecast of Cause:

1. Power Supply failure 2. External cause
3. Electrical Components defective

Check Point 1 : Check Installation Condition

- Isn't the breaker down?
- Check loose or removed connection cable.

>>If abnormal condition is found, correct it by referring to Installation Manual or Data & Technical Manual.

OK

Check Point 2 : Check external cause at Indoor and Outdoor (Voltage drop or Noise)

- Instant drop ----- Check if there is a large load electric apparatus in the same circuit.
- Momentary power failure ----- Check if there is a defective contact or leak current in the power supply circuit.

Noise ----- Check if there is any equipment causing harmonic wave near electric line.
(Neon bulb or electric equipment that may cause harmonic wave)
Check the complete insulation of grounding.

OK

Check Point 3 : Check Electrical Components

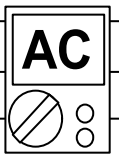

- Check the voltage of power supply.

>> Check if AC187 - 253V appears at Outdoor Unit Terminal L1 - L2.

YES

- Check Fuse of between of Terminal and Filter PCB.

>> If Fuse is open, check if the wiring between Terminal and Filter PCB is loose, and replace Fuse.

- Check Varistor in Filter PCB.

>> If Varistor is defective, there is a possibility of an abnormal power supply. Check the correct power supply and replace Varistor. Upon checking the normal power supply, replace Varistor.

OK

Check Point 4 : Replace Filter PCB

▶ **If Check Point 1- 3 do not improve the symptom, replace Filter PCB.**

Troubleshooting 36

Outdoor Unit - No Power

Forecast of Cause:

1. Power Supply failure 2. External cause
3. Electrical Components defective

Check Point 1 : Check Installation Condition

- Isn't the breaker down?
- Check loose or removed connection cable.

>>If abnormal condition is found, correct it by referring to Installation Manual or Data & Technical Manual.

OK

Check Point 2 : Check external cause at Indoor and Outdoor (Voltage drop or Noise)

- Instant drop ----- Check if there is a large load electric apparatus in the same circuit.
- Momentary power failure ----- Check if there is a defective contact or leak current in the power supply circuit.
- Noise ----- Check if there is any equipment causing harmonic wave near electric line.
  (Neon bulb or electric equipment that may cause harmonic wave)
  Check the complete insulation of grounding.

OK

Check Point 3 : Check Electrical Components

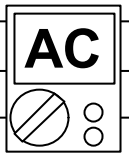

- Check the voltage of power supply.

>> Check if AC187 - 253V appears at Outdoor Unit Terminal L1 - L2.

YES

- Check Fuse in Main PCB.

>> If Fuse is open, check if the wiring between Terminal and Main PCB is loose, and replace Fuse.

YES

- Check Active Filter Module. **(PARTS INFORMATION 6)**

>> If Active Filter Module is abnormal, replace it.

OK

Check Point 4 : Replace Main PCB

▶ **If Check Point 1- 3 do not improve the symptom, replace Main PCB.**

Troubleshooting 37

No Operation (Power is ON)

Forecast of Cause:

1. Setting/ Connection failure 2. External cause
3. Electrical Component defective

Check Point 1 : Check indoor and outdoor installation condition

- Indoor Unit - Check incorrect wiring between Indoor Unit - Remote Control.
  Or, check if there is an open cable connection.
- Are these Indoor unit, Outdoor unit, and Remote control suitable model numbers to connect?

>> If there is some abnormal condition, correct it by referring to Installation manual and Data & Technical Manual.

OK

Turn off Power and check/ correct followings.

- Is there loose or removed communication line of Indoor unit and Outdoor unit?

OK

Check Point 2 : Check external cause at Indoor and Outdoor (Voltage drop or Noise)

- Instant drop ----- Check if there is a large load electric apparatus in the same circuit.
- Momentary power failure ----- Check if there is a defective contact or leak current in the power supply circuit.
- Noise ----- Check if there is any equipment causing harmonic wave near electric line.
  (Neon bulb or electric equipment that may cause harmonic wave)
  Check the complete insulation of grounding.

OK

Check Point 3 : Check Wired Remote Controller and Controller PCB

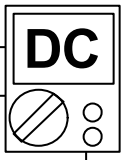

- Check Voltage at terminal 1-3 of Controller PCB or Communication PCB.
  (Power supply to Remote Control)
  Wall Mount Type : CN300 (UTY-TWRXZ2)
  Cassette Type, Duct Type : CN300
  Floor Type : CN6

>> If it is DC12V, Remote Controller is failure. (Controller PCB is normal) >> Replace Remote Controller
>> If it is DC 0V, Controller PCB is failure. (Check Remote Control once again)
>> Check Indoor unit fan motor. (PARTS INFORMATION 4)
If it is normal, replace Controller PCB.
If it is abnormal, replace Indoor unit fan motor and Controller PCB.

>> If the symptom does not change by above Check 1, 2, 3, replace Main PCB of Outdoor unit.

Troubleshooting 38

No Cooling / No Heating

Forecast of Cause:

1. Indoor Unit error 2. Outdoor Unit error
3. Effect by Surrounding environment
4. Connection Pipe / Connection Wire failure 5. Refrigeration cycle failure

Check Point 1 : Check Indoor Unit

- Does Indoor unit FAN run on HIGH FAN?
- Is Air filter dirty?
- Is Heat exchanger clogged?
- Check if Energy save function is operated.

OK

Check Point 2 : Check Outdoor Unit Operation

- Check if Outdoor unit is operating
- Check any objects that obstruct the air flow route.
- Check clogged Heat exchanger.
- Is the Valve open?

OK

Check Point 3 : Check Site Condition

- Is capacity of Indoor unit fitted to Room size?
- Any windows open? Or direct sunlight ?

OK

Check Point 4 : Check Indoor/ Outdoor Installation Condition

- Check connection pipe (specified pipe length & Pipe diameter?)
- Check any loose or removed communication line.

>> If there is an abnormal condition, correct it by referring to Installation Manual or Data & Technical Manual.

OK

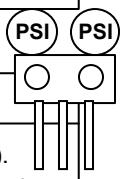

Check Point 5 : Check Refrigeration Cycle

- Check if Strainer is clogged (Refer to the figure at right).
- Measure Gas Pressure and if there is a leakage, correct it.

>> When recharging the refrigerant, make sure to perform vacuuming, and recharge the specified amount.

- Check EEV (PARTS INFORMATION 3)
- Check Compressor (PARTS INFORMATION 1,2)

Attention

Strainer normally does not have temperature difference between inlet and outlet as shown in① , but if there is a difference like shown in② , there is a possibility of inside clogged. In this case, replace Strainer.

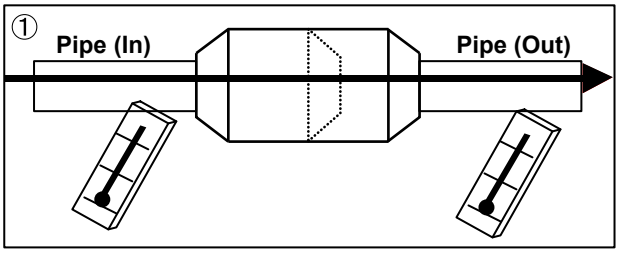

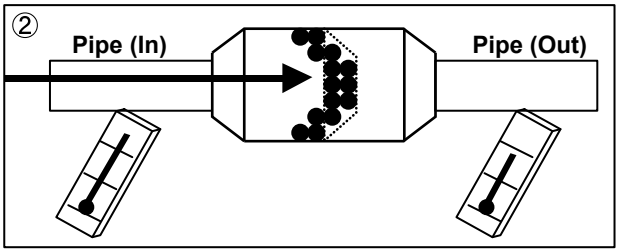

Troubleshooting 39

Abnormal Noise

Forecast of Cause :

1. Abnormal installation (Indoor/ Outdoor)
2. Fan failure (Indoor/ Outdoor)
3. Compressor failure (Outdoor)

Diagnosis method when Abnormal Noise is occurred

- Abnormal noise is coming from Indoor unit. (Check and correct followings)

- Is Main Unit installed in stable condition?
- Is the installation of Air suction grille and front panel normal?

OK

- Is Fan broken or deformed?
- Is the screw of Fan loose?
- Is there any object which obstruct the Fan rotation?

- Abnormal noise is coming from Outdoor unit. (Check and correct followings)

- Is Main Unit installed in stable condition?
- Is Fan Guard installed normally?

OK

- Is Fan broken or deformed?
- Is the screw of Fan loose?
- Is there any object which obstruct the Fan rotation?

OK

- Check if vibration noise by loose bolt or contact noise of piping is happening.

OK

- Is Compressor locked?
  >> Check Compressor (PARTS INFORMATION 1,2)

Trouble shooting 36

Water Leaking

Forecast of Cause:

1. Erroneous installation 2. Drain hose failure

Diagnosis method when water leak occurs

- Is Main unit installed in stable condition?
- Is Main unit broken or deformed at the time of transportation or maintenance?

OK

- Is Drain hose connection loose?
- Is there a trap in Drain hose?
- Is Drain Hose clogged?

OK

- Is Fan rotating?

Diagnosis method when water is spitting out.

- Is the filter clogged?

OK

- Check Gas pressure and correct it if there was a gas leak.

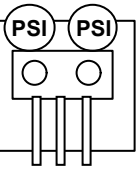

2-4 SERVICE PARTS INFORMATION

SERVICE PARTS INFORMATION 1

Compressor

Diagnosis method of Compressor (If Outdoor Unit LED displays Error, refer to Trouble shooting)

Does not start up

- Is there open or loose connection cable?
- Check Filter PCB, Main PCB, connection of Compressor,and winding resistance. (Refer to the next page).

>> If there is no failure, the defect of Compressor is considered (Locked compressor due to clogged dirt or less oil)

Replace Compressor

Stops soon after starting up

- Is there open or loose connection cable?
- Is Gas Pipe Valve open? (Low Pressure is too low)
- Check if Refrigerant is leaking. (Recharge Refrigerant)

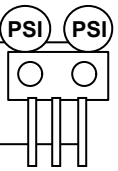

- Check if Strainer is clogged. (PARTS INFORMATION 3)
- Check Filter PCB, Main PCB, connection of Compressor,and winding resistance. (Refer to the next page).

>> If there is no failure, the defect of Compressor can be considered. (Compression part broken or valve defective.)

Replace Compressor

Abnormal noise

- Check if vibration noise by loose bolt or contact noise of piping is happening.

▶Defective Compressor can be considered. (due to inside dirt clogging or broken component)

Replace Compressor

SERVICE PARTS INFORMATION 2

Inverter Compressor

Check Point 1 : Check Connection

・Check terminal connection of Compressor (loose or incorrect wiring)

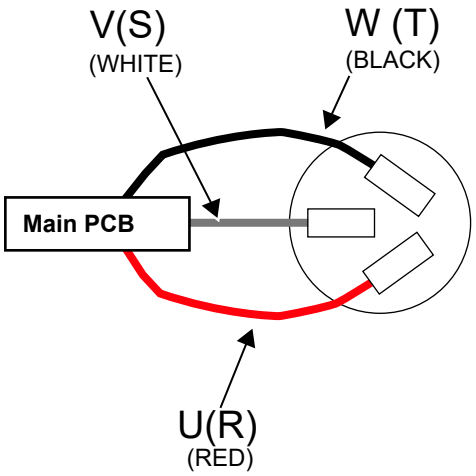

・Check terminal connection of Main PCB (loose or incorrect wiring)

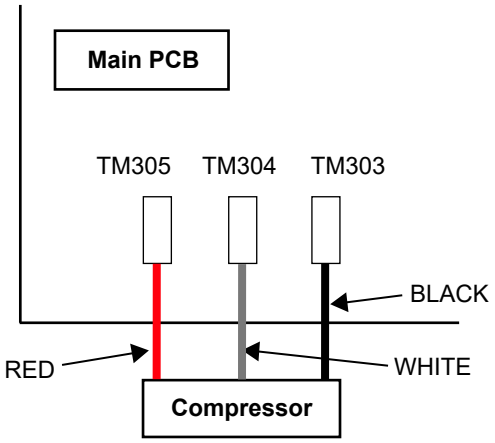

Check Point 2 : Check Winding Resistance

・Check winding resistance of each terminal

▶**If the resistance value is 0Ω or infinite, replace Compressor.**

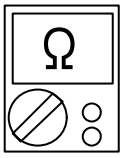

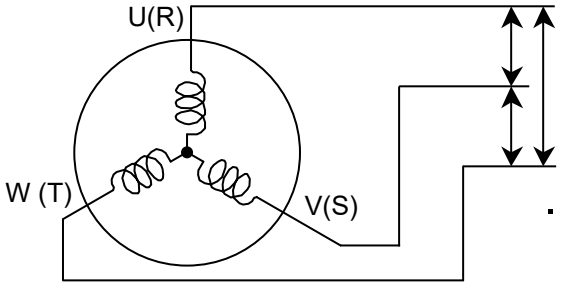

・For AOU18 / 24RLXFZ
Resistance Value : 0.97 Ω at 68°F(20°C)

・For AOU36RLXFZ
Resistance Value : 0.88 Ω at 68°F(20°C)

Check Point 3 : Replace Main PCB

▶**If the symptom does not change with above Check 1, 2, replace Main PCB.**

SERVICE PARTS INFORMATION 3

Outdoor unit Electronic Expansion Valve
(EEV)

Check Point 1 : Check Connections

・Check connection of connector
(Loose connector or open cable)

For AOU18RLXFZ

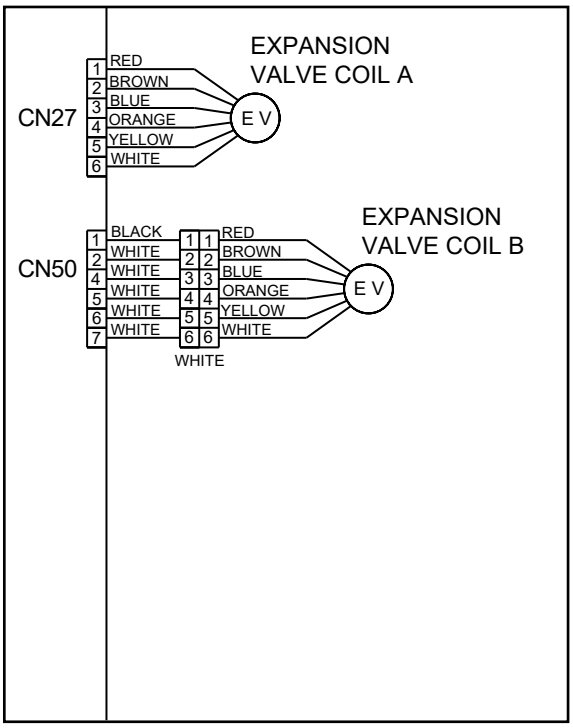

For AOU24RLXFZ

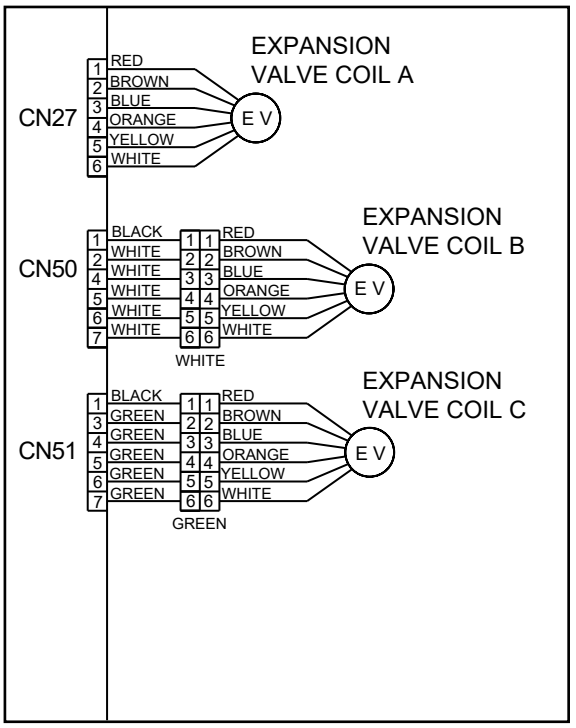

For AOU36RLXFZ

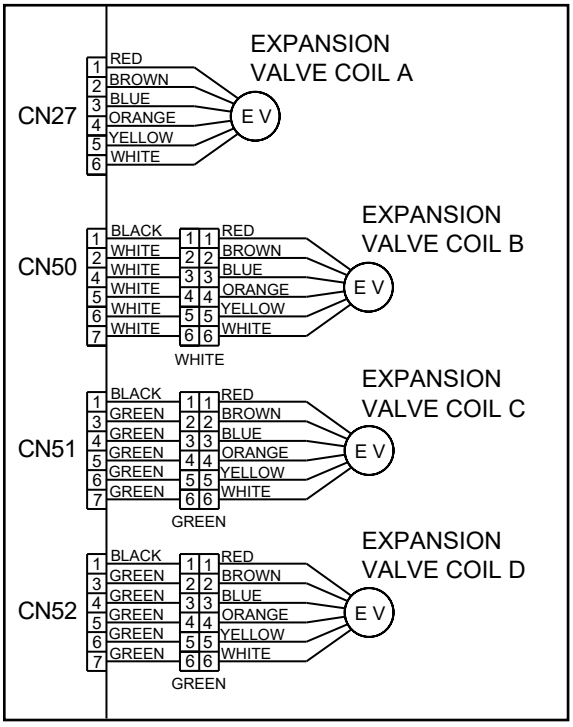

Check Point 2 : Check Coil of EEV

・Remove connector, check each winding resistance of Coil.

Read wire	Resistance value
White - Red	**46**Ω ± **4**Ω at 68°F(20°C)
Yellow - Brown	
Orange - Red	
Blue - Brown	

▶ **If Resistance value is abnormal, replace EEV.**

Check Point 3 : Check Voltage from Main PCB.

・Remove Connector and check Voltage (DC12V)

▶ **If it does not appear, replace Main PCB.**

Check Point 4 : Check Noise at start up

・Turn on Power and check operation noise.

▶ **If an abnormal noise does not show, replace Main PCB.**

Check Point 5 : Check Opening and Closing Operation of Valve

When Valve is closed,
it has a temp. difference between Inlet and Outlet.

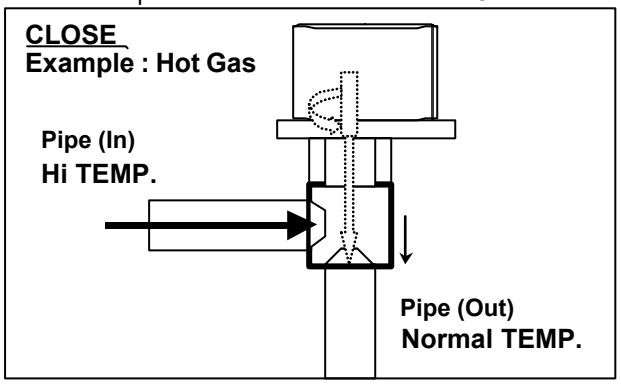

If it is open,
it has no temp. difference between Inlet and Outlet.

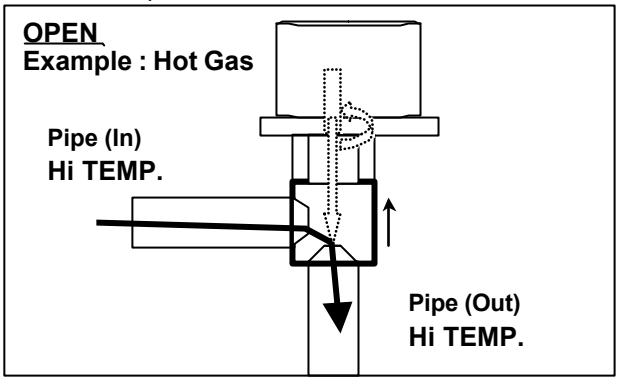

Check Point 6 : Check Strainer

Strainer normally does not have temperature difference between inlet and outlet as shown in ①,
but if there is a difference as shown in ②, there is a possibility of inside clogged. In this case, replace Strainer.

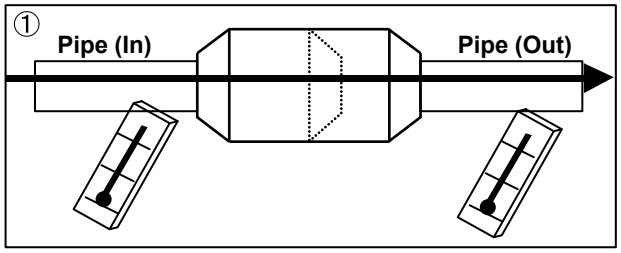

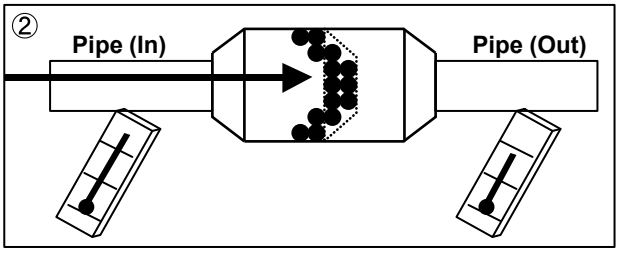

SERVICE PARTS INFORMATION 4

Indoor unit fan motor

Check Point 1 : Check rotation of Fan

・Rotate the fan by hand when operation is off.
(Check if fan is caught, dropped off or locked motor)
>>If Fan or Bearing is abnormal, replace it.

Check Point 2 : Check resistance of Indoor Fan Motor

・Refer to below. Circuit-test "Vm" and "GND" terminal.
(Vm: DC voltage, GND: Ground terminal)
>>If they are short-circuited (below 300 kΩ), replace Indoor fan motor and Controller PCB.

For Compact Wall Mount, Floor(Upper Motor) Type

Pin number (wire color)	Terminal function (symbol)
6 (Red)	DC voltage (Vm)
5	No function
4 (Black)	Ground terminal (GND)
3 (White)	Control voltage (Vcc)
2 (Yellow)	Speed command (Vsp)
1 (Blue)	Feed back (FG)

For Compact Wall Mount, Wall Mount Type

Pin number (wire color)	Terminal function (symbol)
1 (Red)	DC voltage (Vm)
2	No function
3	No function
4 (Black)	Ground terminal (GND)
5 (White)	Control voltage (Vcc)
6 (Yellow)	Speed command (Vsp)
7 (Blue)	Feed back (FG)

For Slim Duct, Compact Cassette(PCB Side) Type

Pin number (wire color)	Terminal function (symbol)
1 (Red)	DC voltage (Vm)
2	No function
3	No function
4 (Black)	Ground terminal (GND)
5 (White)	Control voltage (Vcc)
6 (Yellow)	Speed command (Vsp)
7 (Brown)	Feed back (FG)

For Compact Cassette(Fan Motor Side) Type

Pin number (wire color)	Terminal function (symbol)
1 (Red)	DC voltage (Vm)
2	No function
3 (White)	Control voltage (Vcc)
4 (Black)	Ground terminal (GND)
5	No function
6	No function
7 (Yellow)	Speed command (Vsp)
8 (Brown)	Feed back (FG)

For Floor(Lower Motor) Type

Pin number (wire color)	Terminal function (symbol)
7 (Red)	DC voltage (Vm)
6	No function
5	No function
4 (Black)	Ground terminal (GND)
3 (White)	Control voltage (Vcc)
2 (Yellow)	Speed command (Vsp)
1 (Blue)	Feed back (FG)

SERVICE PARTS INFORMATION 5

Outdoor unit fan motor

Check Point 1 : Check rotation of Fan

・Rotate the fan by hand when operation is off.
(Check if fan is caught, dropped off or locked motor)
>>If Fan or Bearing is abnormal, replace it.

Check Point 2 : Check resistance of Outdoor Fan Motor

・Refer to below. Circuit-test "Vm" and "GND" terminal.
(Vm: DC voltage, GND: Ground terminal)
>>If they are short-circuited (below 300 kΩ), replace Outdoor fan motor and Main PCB.

For AOU18 / 24RLXFZ

Pin number (wire color)	Terminal function (symbol)
1 (Red)	DC voltage (Vm)
2	No function
3	No function
4 (Black)	Ground terminal (GND)
5 (White)	Control voltage (Vcc)
6 (Yellow)	Speed command (Vsp)
7 (Brown)	Feed back (FG)

Pin number (wire color)	Terminal function (symbol)
1 (Red)	DC voltage (Vm)
2	No function
3 (Black)	Ground terminal (GND)
4 (White)	Control voltage (Vcc)
5 (Yellow)	Speed command (Vsp)
6 (Blue)	Feed back (FG)

SERVICE PARTS INFORMATION 6

Active filter module

Check Point 1 : Check Open or Short-circuit and Diode (D1)

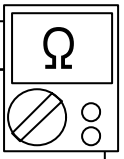

・Remove connector, check the open or short-circuit and the diode in the module

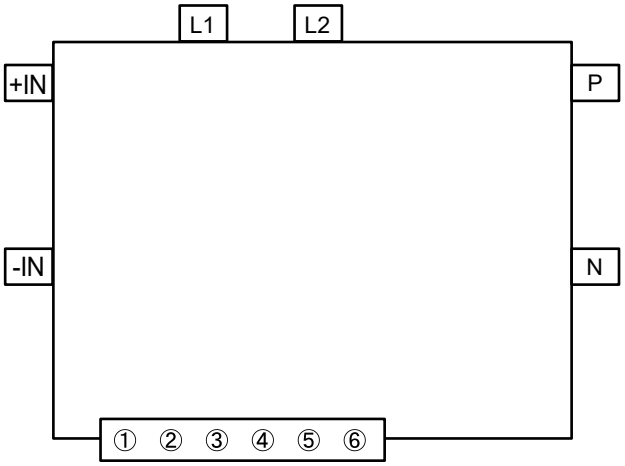

Check the open or short-circuit

	Terminal		Resistance value
	Tester(+)	Tester(-)	
	(+IN)	(–IN)	**360kΩ ±20%**
	(–IN)	N	**0 Ω**
	P	(+IN)	**720kΩ ±20%**
☐	L1	L2	**1.40MΩ / 2.28MΩ** (Ref. value 1) (Ref. value 2)
	P	N	**360kΩ ±20%**
	L1,L2	Control Box	**∞ Ω**
☐	L2	N	**1.69MΩ / 1.88MΩ** (Ref. value 1) (Ref. value 2)

Check the diode

	Terminal		Resistance value
	Tester(+)	Tester(-)	
☐	L2	P	**1.32MΩ / 1.50MΩ** (Ref. value 1) (Ref. value 2)
☐	P	L2	**1.40MΩ / 1.51MΩ** (Ref. value 1) (Ref. value 2)

☐ ▭ By kind of tester, the value may change significantly.

Ref. value 1
Specifications for Multimeter
Manufacturer : HIOKI
Model name : 3804
Power source : DC9V.

Ref. value 2
Specifications for Multimeter
Manufacturer : YOKOGAWA
Model name : 7534
Power source : DC3V.

▶ **If it is abnormal,replace ACTIVE FILTER MODULE**

Check Point 2 : Check the Output DC voltage (between P and N)

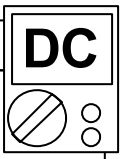

・Check the Output DC voltage (between P and N) of compressor stopping and operating.

>> If the output voltage of compressor operating is less than the output voltage of compressor stopping, Active Filter Module is detective. >> **Replace Active Filter Module**

Refrigerant
R410A

Slim Duct / Compact Cassette
Compact Wall Mounted /
Wall Mounted / Floor type

INVERTER (MULTI)

3 . REPLACEMENT PARTS

3-1 AOU18/ 24RLXFZ

3-1-1 PARTS LAYOUT DRAWING

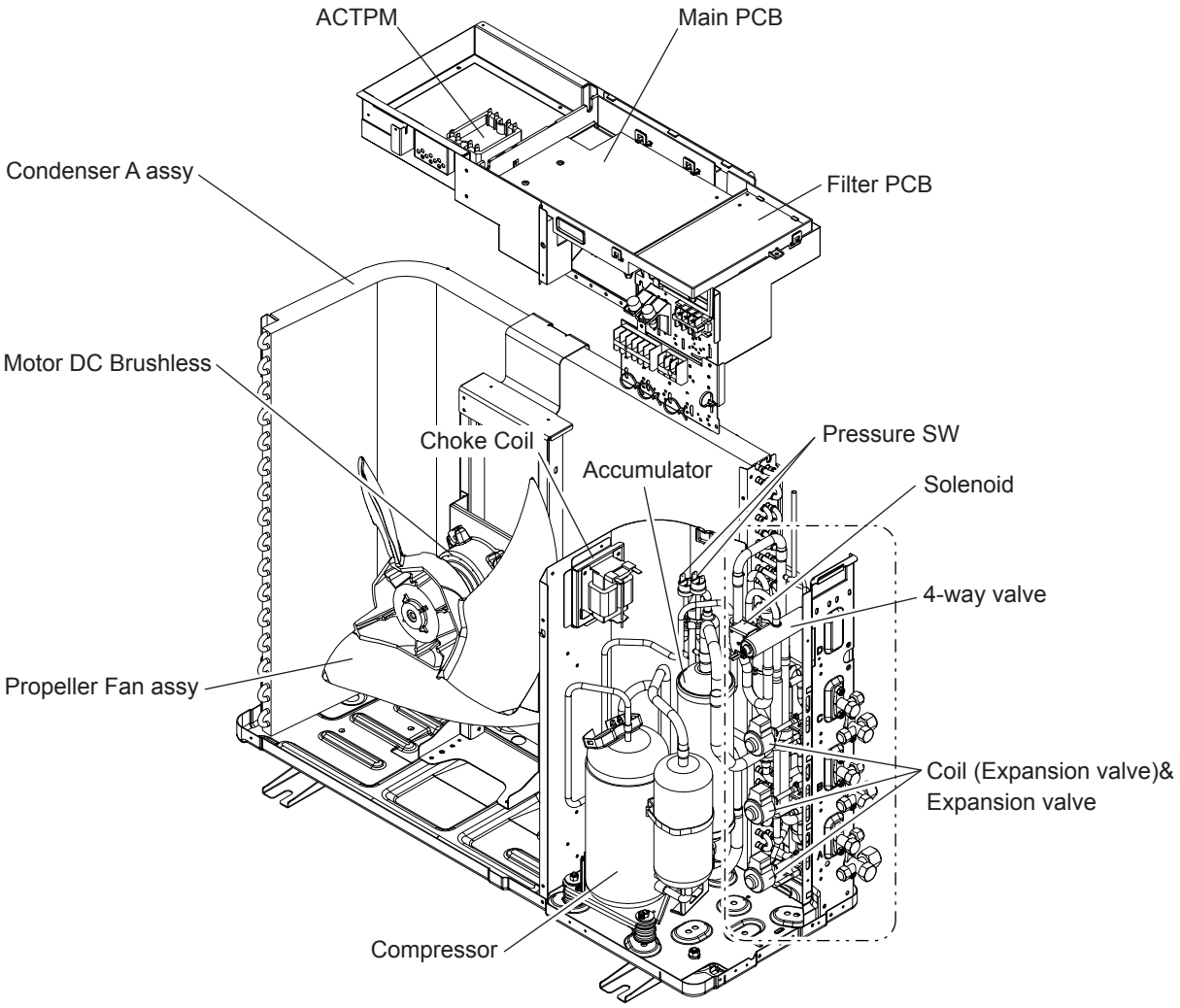

AOU24RLXFZ

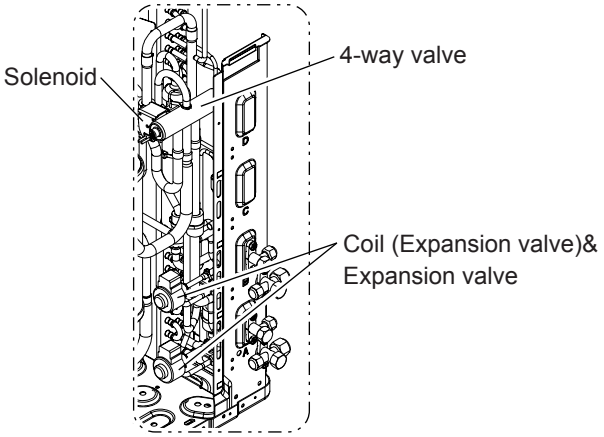

AOU18RLXFZ

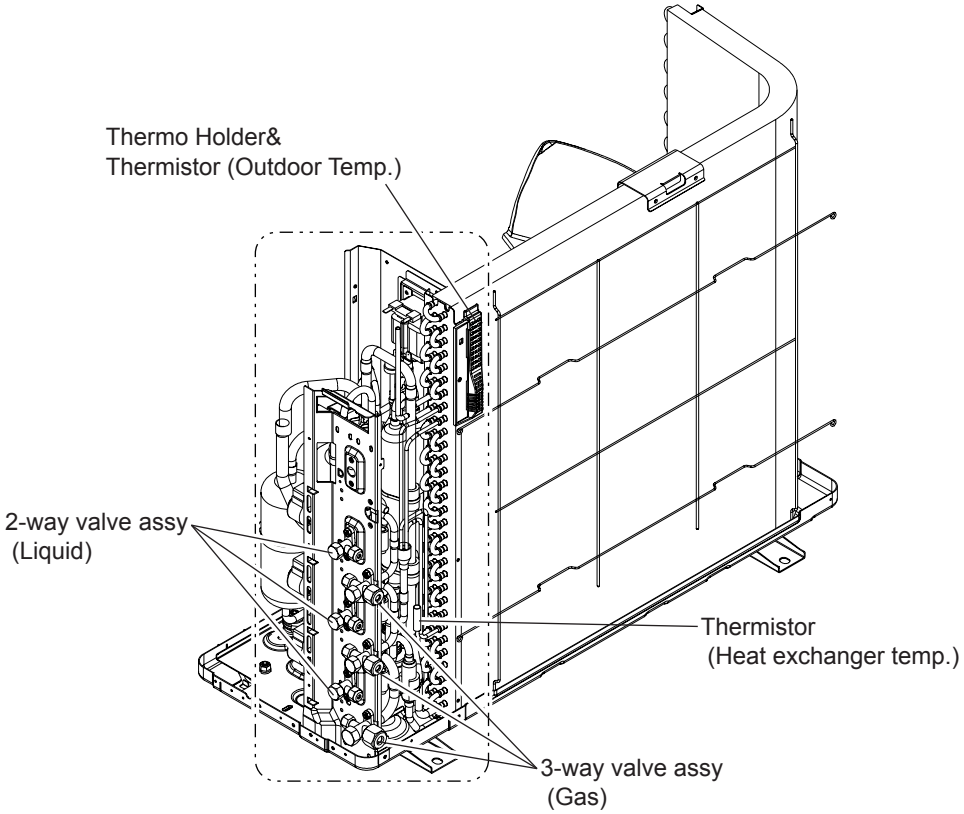

AOU24RLXFZ

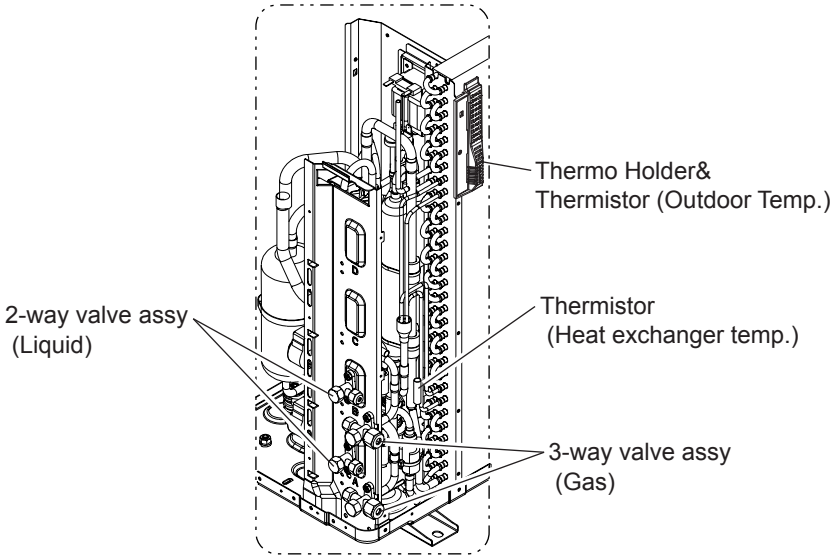

AOU18RLXFZ

3-1-2 DISASSEMBLY PROCESS (AOU18/ 24RLXFZ)

1. Service Panel sub assy removal

- Remove the 2 mounting screws.
- Remove the Service Panel sub assy by sliding downward.

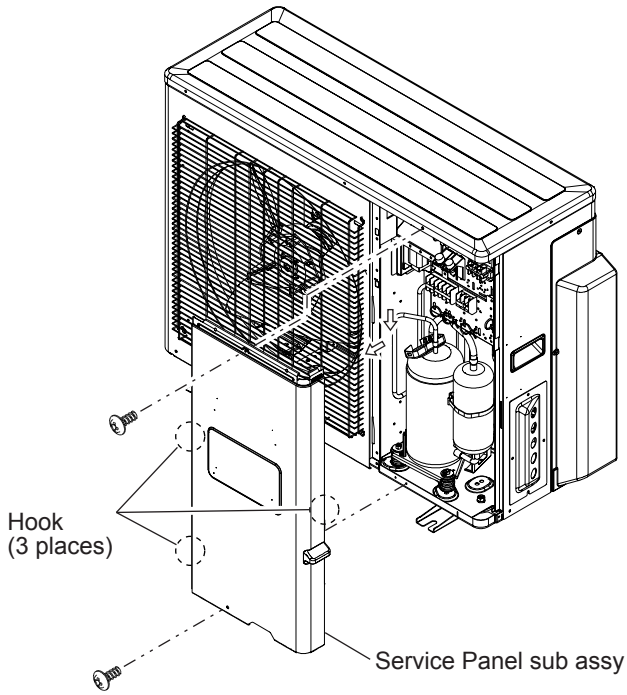

Replaceable Component

Compressor
Accumulator
4-way valve
Solenoid
Thermistor (Compressor temp.)
Thermistor (Discharge temp.)
Thermistor (Outdoor temp.)
Thermistor (Heat exchanger temp.)
Thermistor (2/3-way valve temp.)
Pressure SW
Coil (Expansion valve)

2. Top Panel sub assy removal

- Remove the 7 mounting screws.
- Remove the Top Panel sub assy upward.

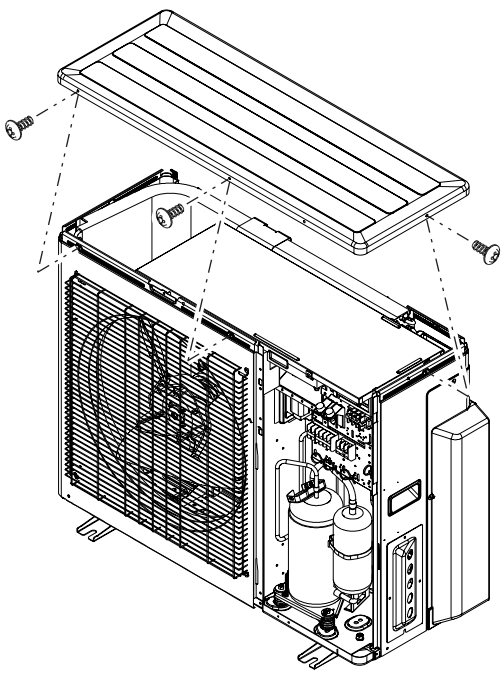

FRONT VIEW

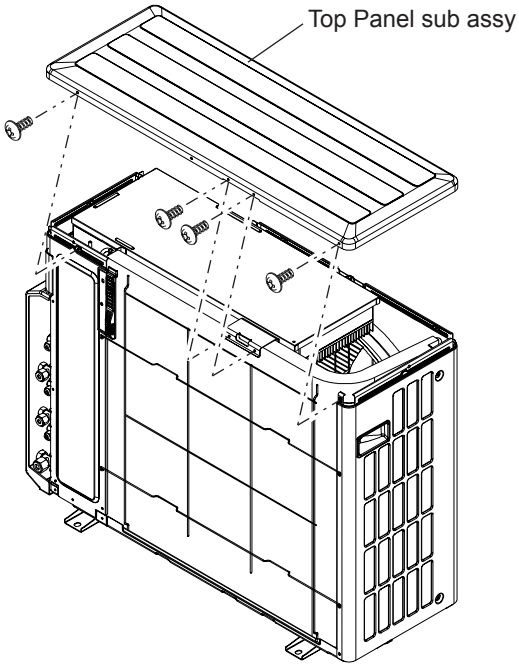

REAR VIEW

3. Inverter Box removal

- Remove the 6 mounting screws.
- Remove the power supply & connection cord.
- Remove the connectors connected to Main PCB. (Thermistor, EEV, and so on)
- Remove the Inverter Box upward.

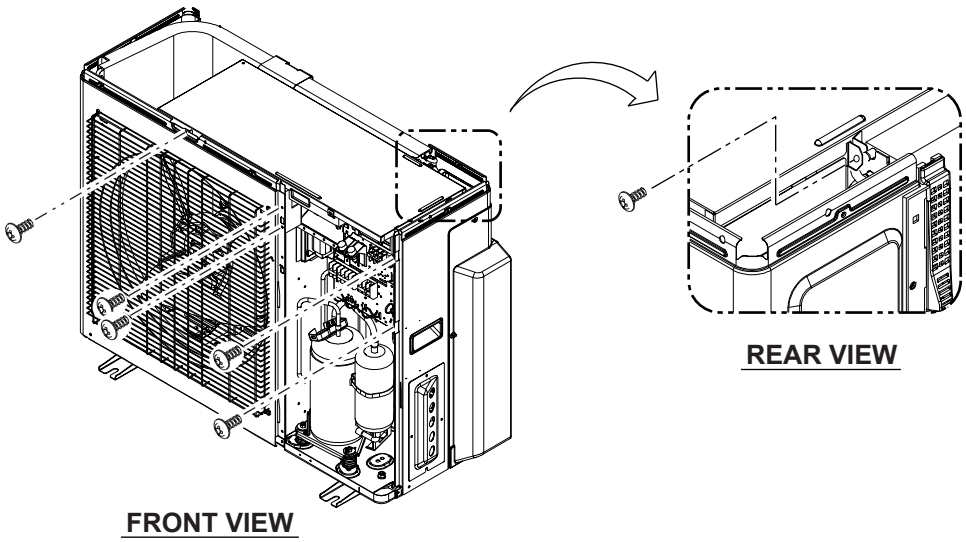

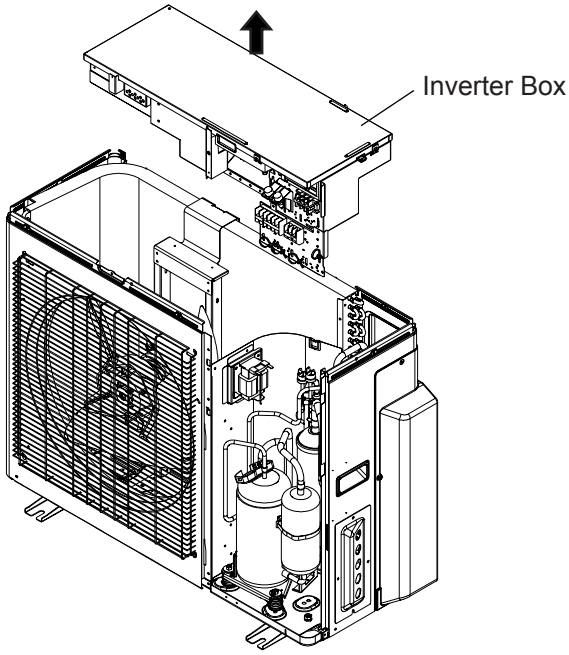

4. Inverter Box Cover removal

- Remove the 1 mounting screw.
- Remove the Inverter Box Cover upward.

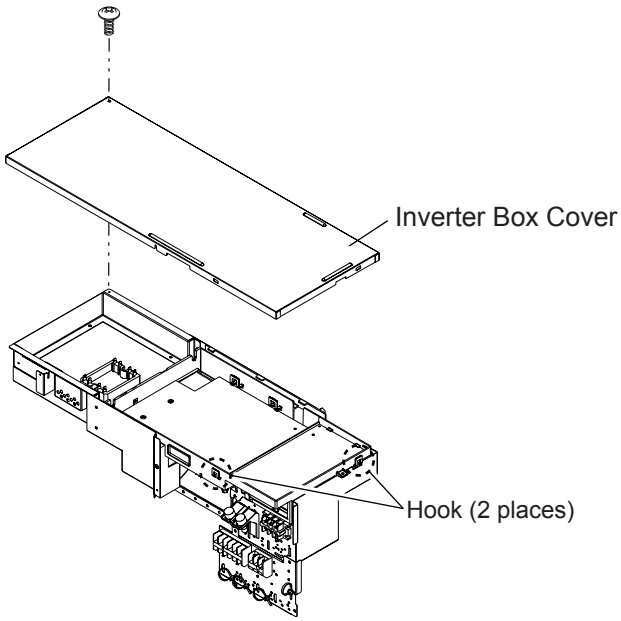

5. Main PCB removal

- Remove the 4 mounting screws. (Refer to VIEW -A)
- Remove the wires from terminal. (Refer to VIEW -B)
- Remove the wires. (Refer to VIEW -C, -D)
- Remove the Main PCB.

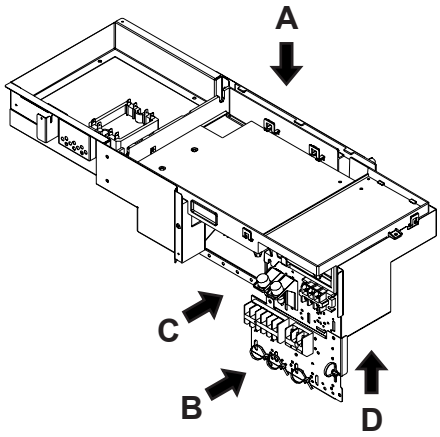

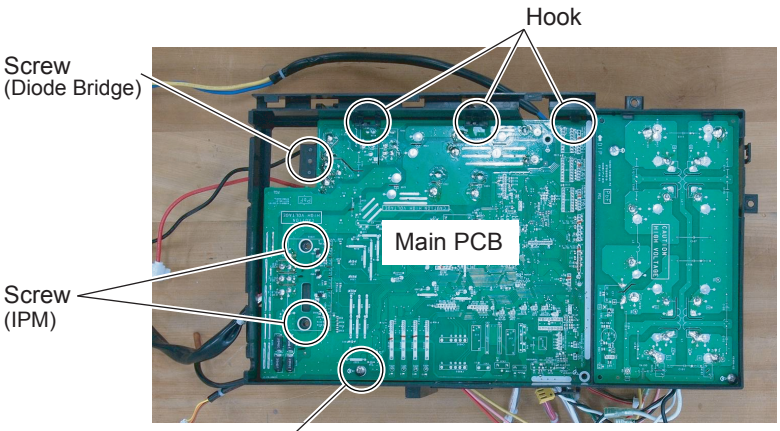

VIEW - A

AOU24RLXFZ

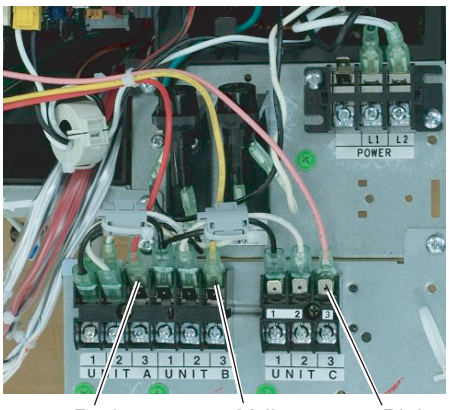

AOU18RLXFZ

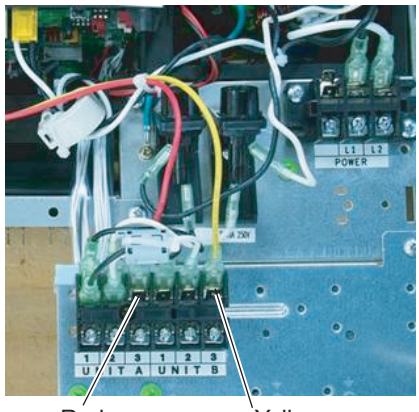

VIEW - B

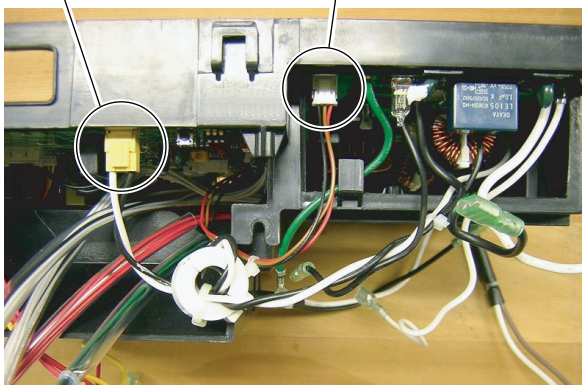
CN34(Yellow)
CN1(White)

VIEW - C

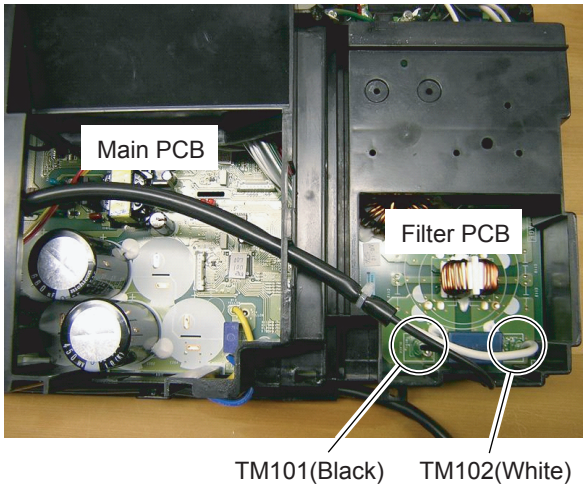
Main PCB
Filter PCB
TM101(Black)
TM102(White)

VIEW - D

Precautions for exchange of Main PCB

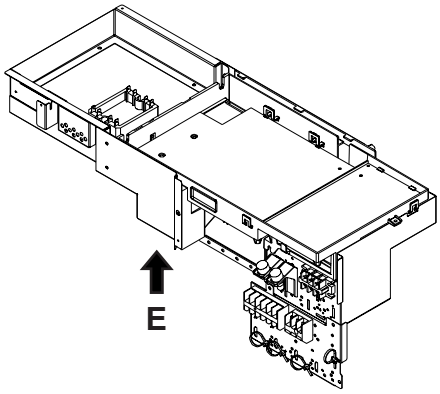

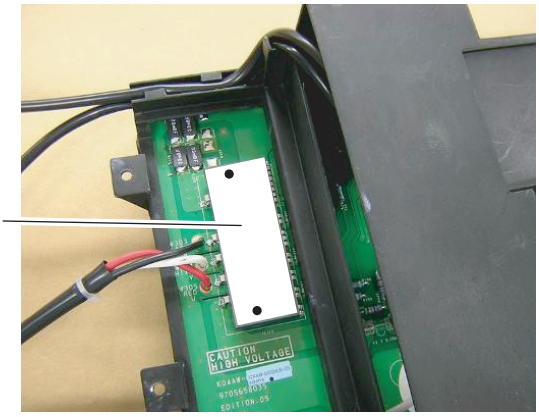

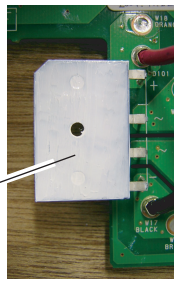

Spread the heat dissipation compound
on the other side of IPM and Diode Bridge,
when you exchange Main PCB by the repair.

VIEW - E

6. Filter PCB removal

- Remove the 2 mounting screws. (Refer to VIEW -A)
- Remove the wires from terminal and fuse holder. (Refer to VIEW -B)
- Remove the Filter PCB.

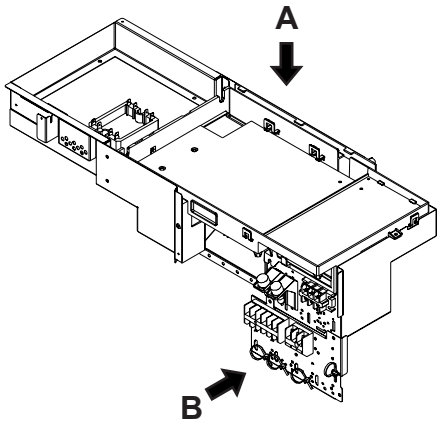

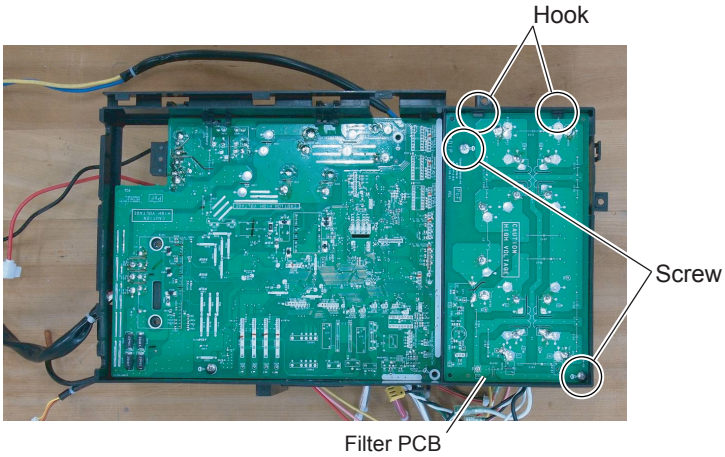

VIEW - A

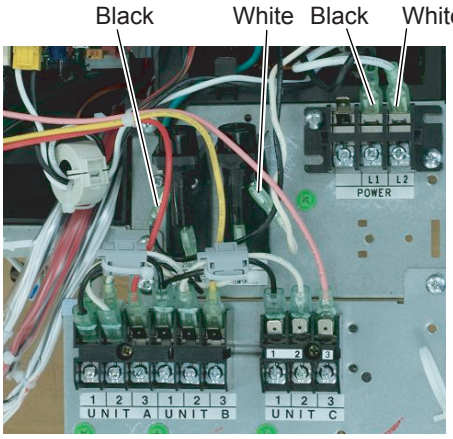

AOU24RLXFZ

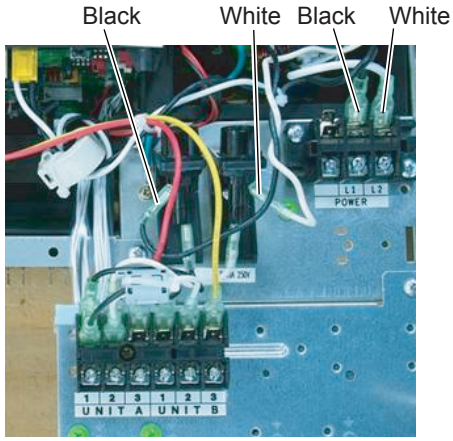

AOU18RLXFZ

VIEW - B

7. ACTPM removal

- Remove the connectors and cords. (Refer to VIEW -F)
- Remove the 2 mounting screws. (Refer to VIEW -F)
- Remove the ACTPM (Active Filter Module).

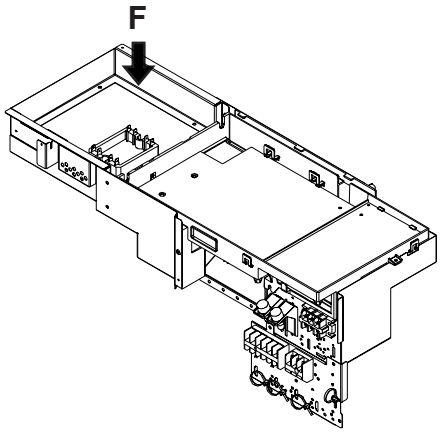

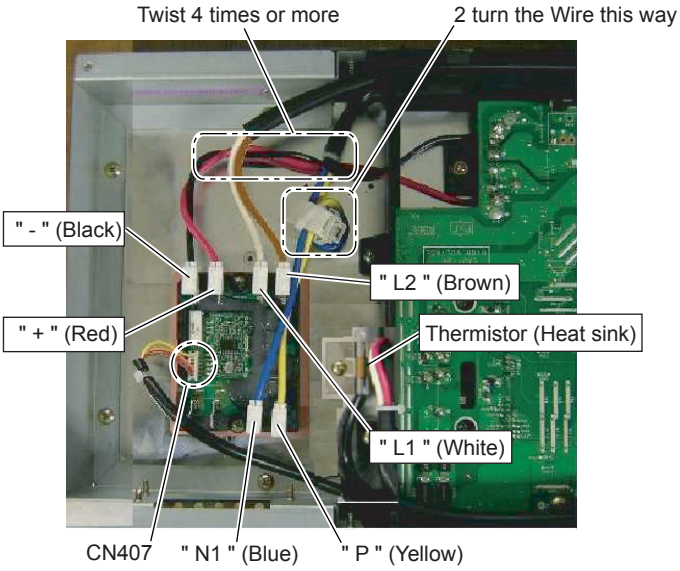

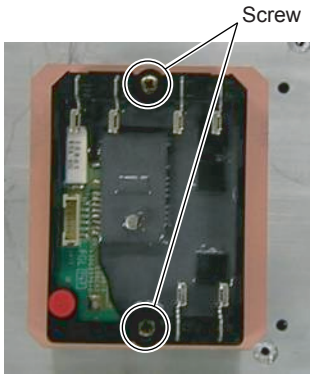

Spread the heat dissipation compound
on the other side of ACTPM,
when you exchange ACTPM by the repair.

VIEW - F

8. Valve Cover sub assy removal

- Remove the 3 mounting screws.
- Remove the Valve Cover sub assy.

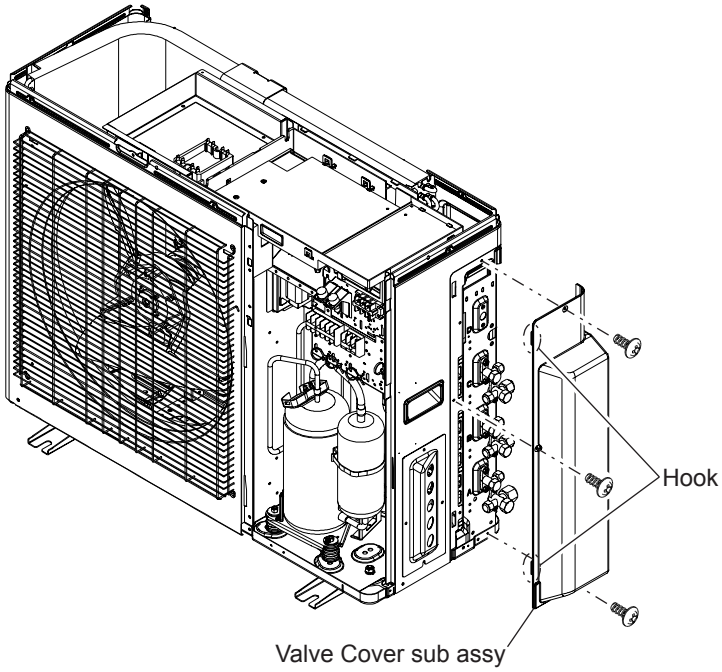

9. Thermo Holder removal

- Remove the 1 mounting screw.
- Remove the Thermo Holder by sliding upward.

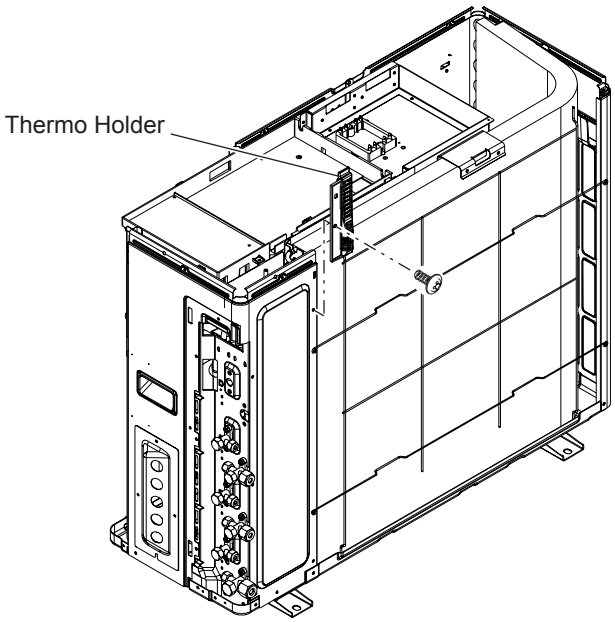

10. Right Panel sub assy removal

- Remove the 13 mounting screws.

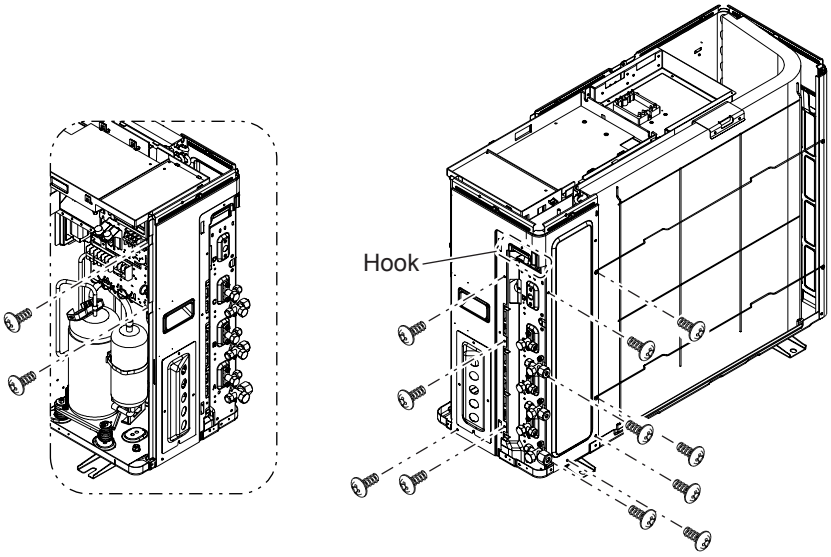

- Remove the Right Panel sub assy by sliding upward.

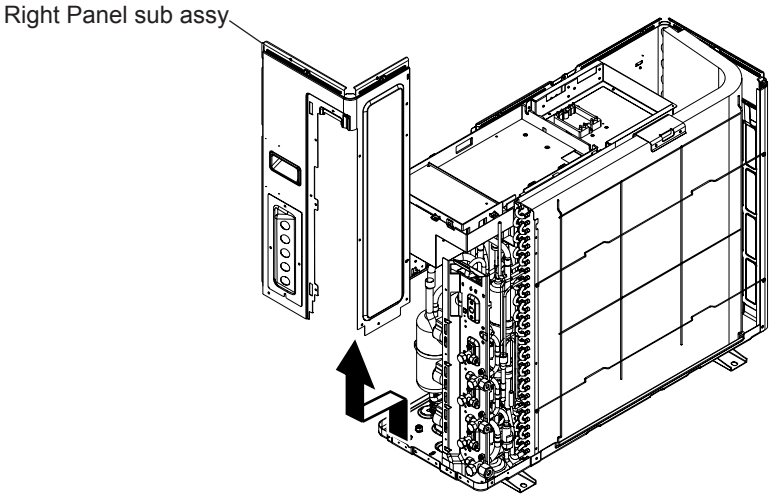

3-2 AOU36RLXFZ

3-2-1 PARTS LAYOUT DRAWING

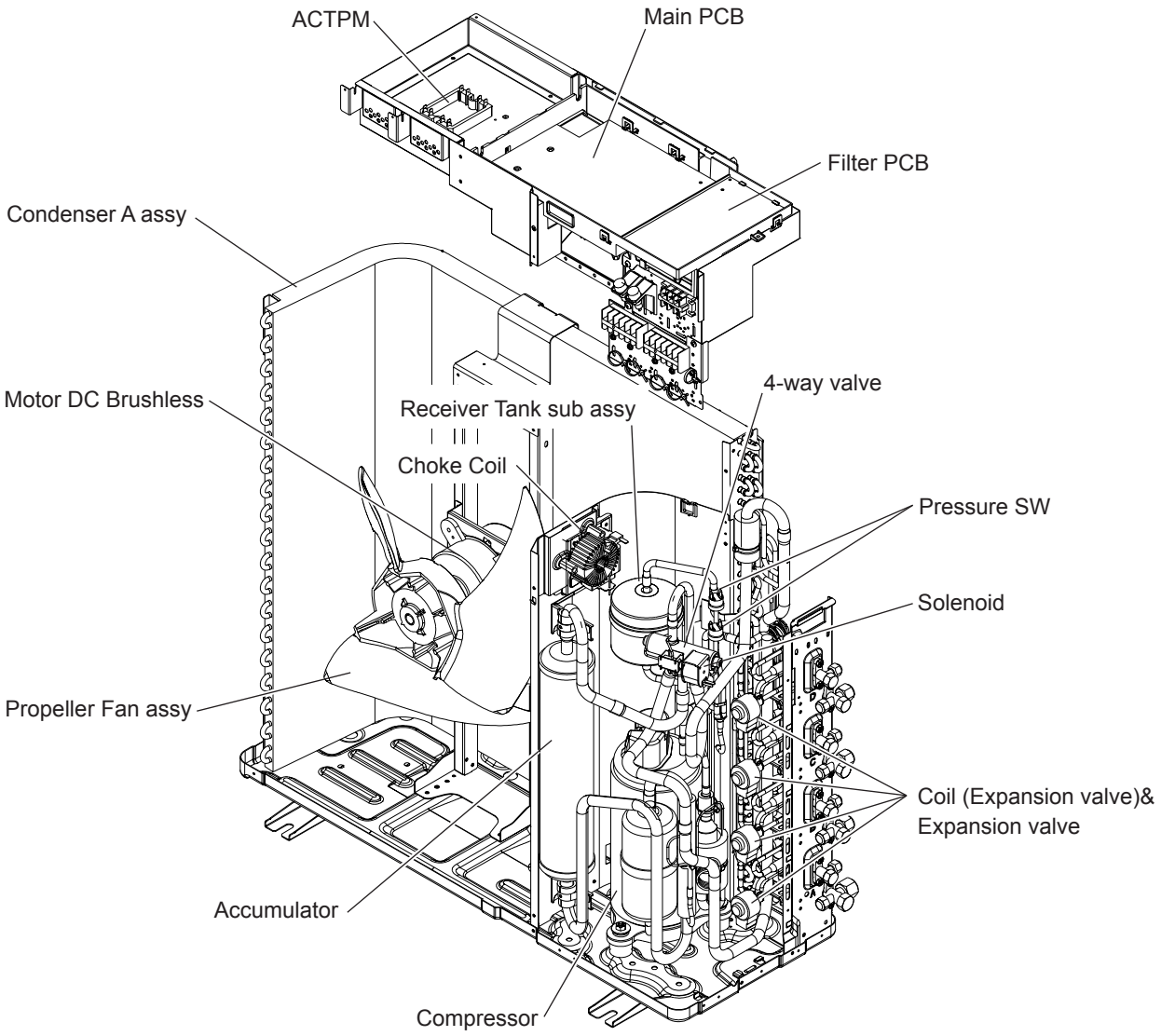

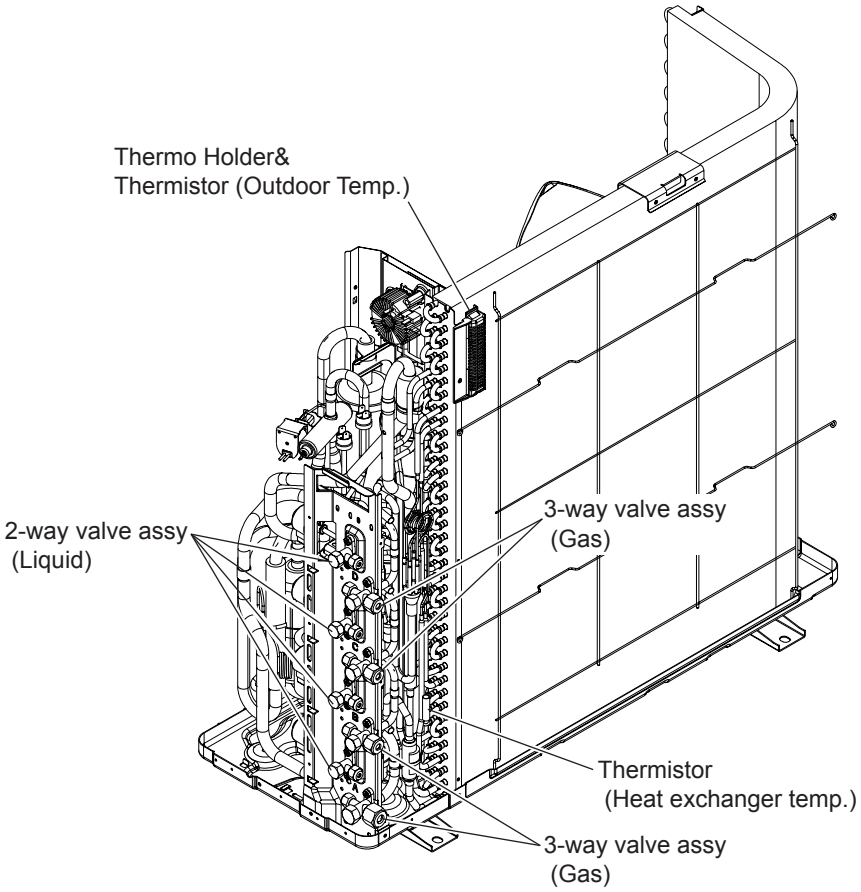
Thermo Holder&
Thermistor (Outdoor Temp.)
2-way valve assy
(Liquid)
3-way valve assy
(Gas)
Thermistor
(Heat exchanger temp.)
3-way valve assy
(Gas)

3-2-2 DISASSEMBLY PROCESS (AOU36RLXFZ)

1. Service Panel sub assy removal

- Remove the 2 mounting screws.
- Remove the Service Panel sub assy by sliding downward.

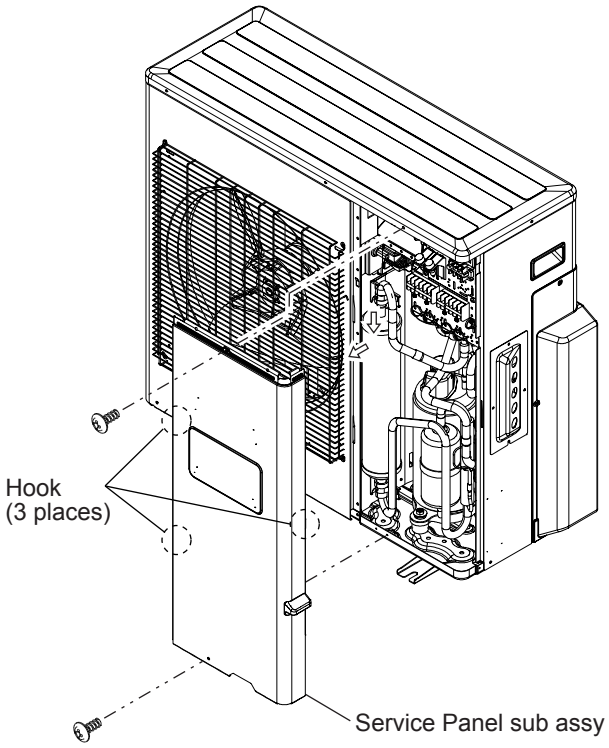

Replaceable Component

Compressor
Accumulator
4-way valve
Solenoid
Thermistor (Compressor temp.)
Thermistor (Discharge temp.)
Thermistor (Outdoor temp.)
Thermistor (Heat exchanger temp.)
Thermistor (2/3-way valve temp.)
Pressure SW
Coil (Expansion valve)

2. Top Panel sub assy removal

- Remove the 7 mounting screws.
- Remove the Top Panel sub assy upward.

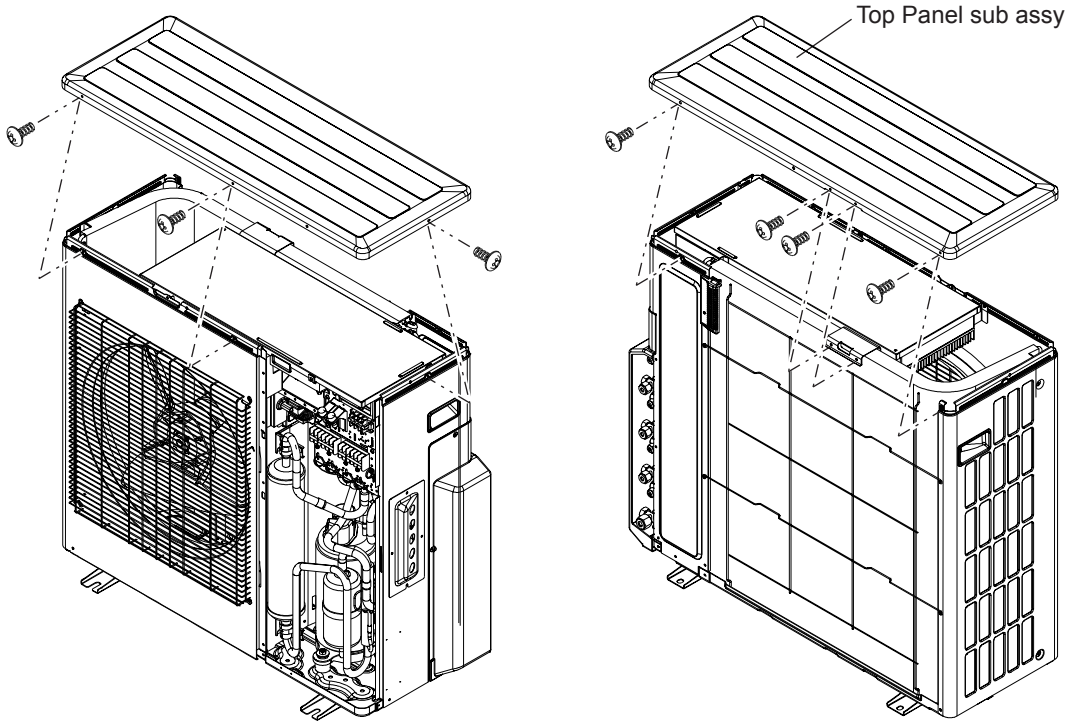

FRONT VIEW

REAR VIEW

3. Inverter Box removal

- Remove the 6 mounting screws.
- Remove the power supply & connection cord.
- Remove the connectors connected to Main PCB. (Thermistor, EEV, and so on)
- Remove the Inverter Box upward.

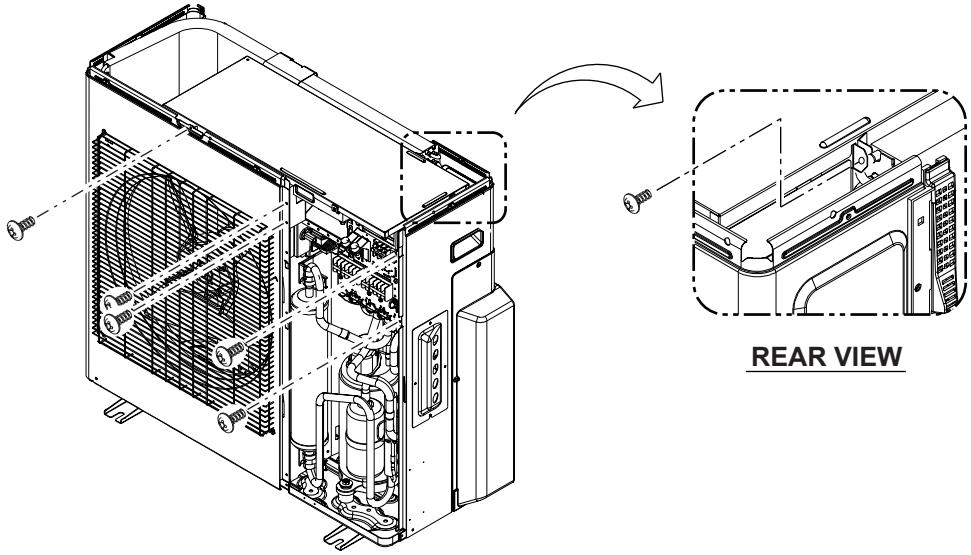

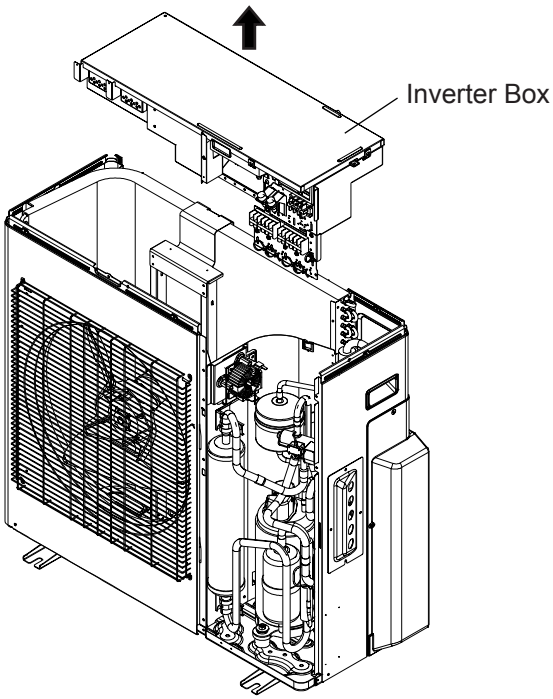

4. Inverter Box Cover removal

- Remove the 1 mounting screw.
- Remove the Inverter Box Cover upward.

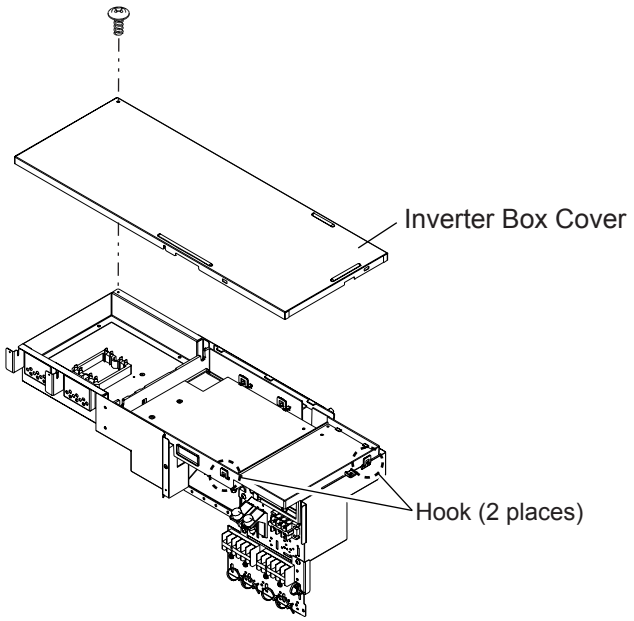

5. Main PCB removal

- Remove the 4 mounting screws. (Refer to VIEW -A)
- Remove the wires from terminal. (Refer to VIEW -B)
- Remove the wires. (Refer to VIEW -C, -D)
- Remove the Main PCB.

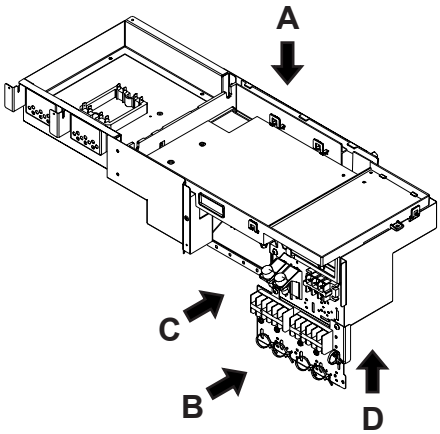

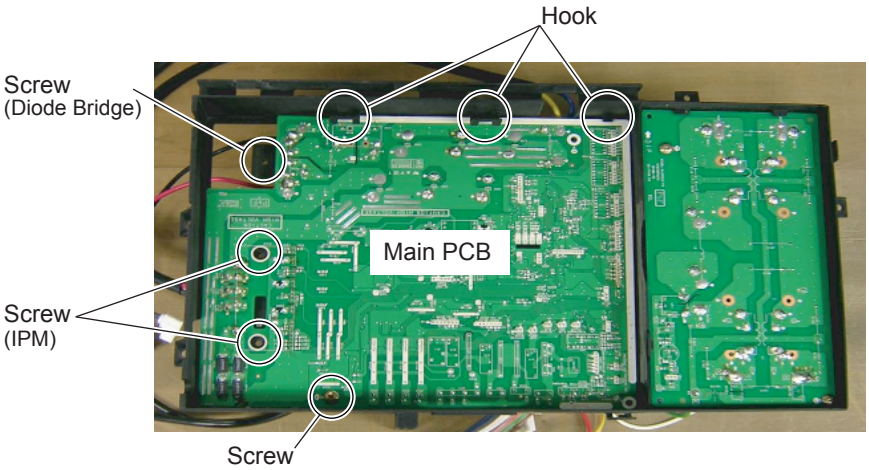

VIEW - A

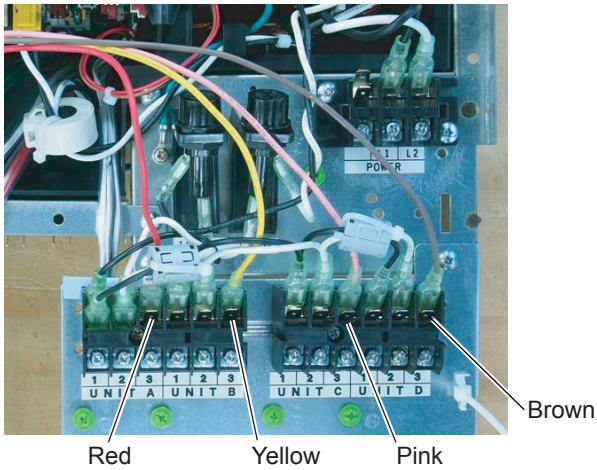

VIEW - B

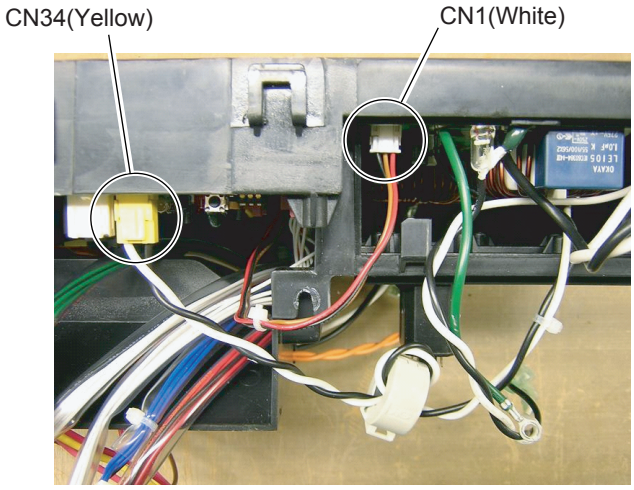
CN34(Yellow)
CN1(White)

VIEW - C

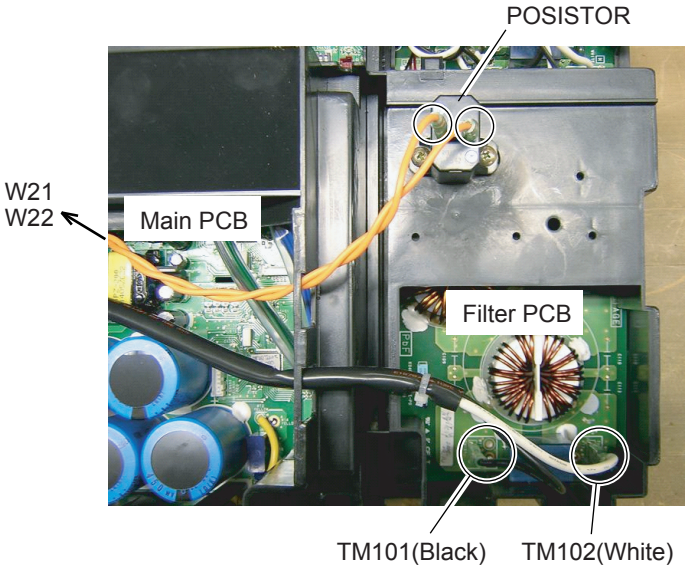
POSISTOR
W21
W22
Main PCB
Filter PCB
TM101(Black)
TM102(White)

VIEW - D

Precautions for exchange of Main PCB

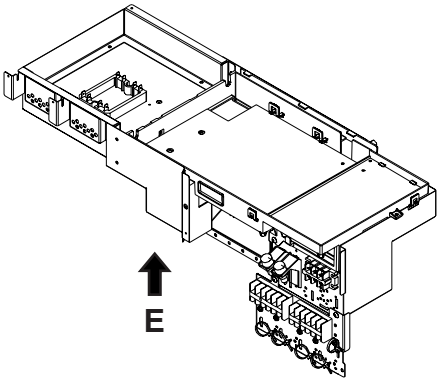

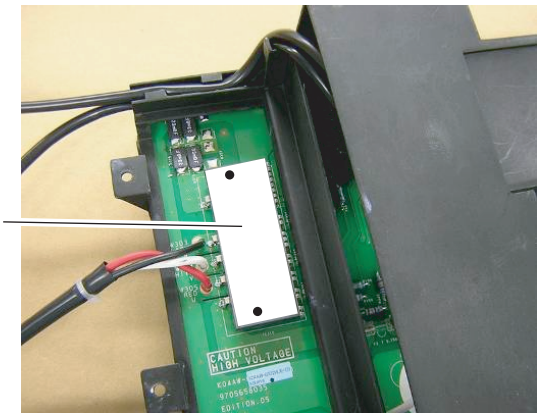

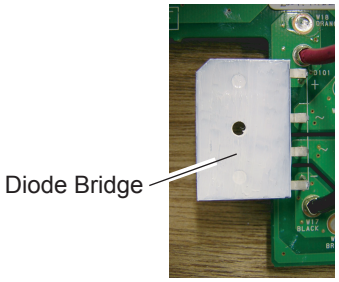

Spread the heat dissipation compound
on the other side of IPM and Diode Bridge,
when you exchange Main PCB by the repair.

VIEW - E

6. Filter PCB removal

- Remove the 2 mounting screws. (Refer to VIEW -A)
- Remove the wires from terminal and fuse holder. (Refer to VIEW -B)
- Remove the Filter PCB.

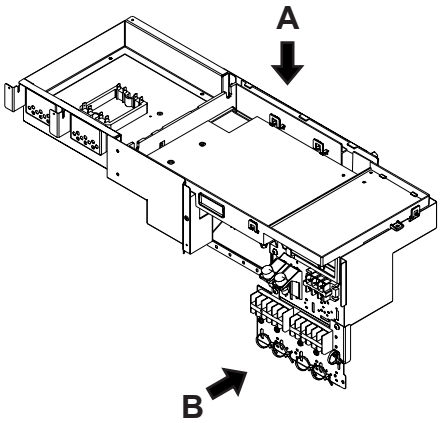

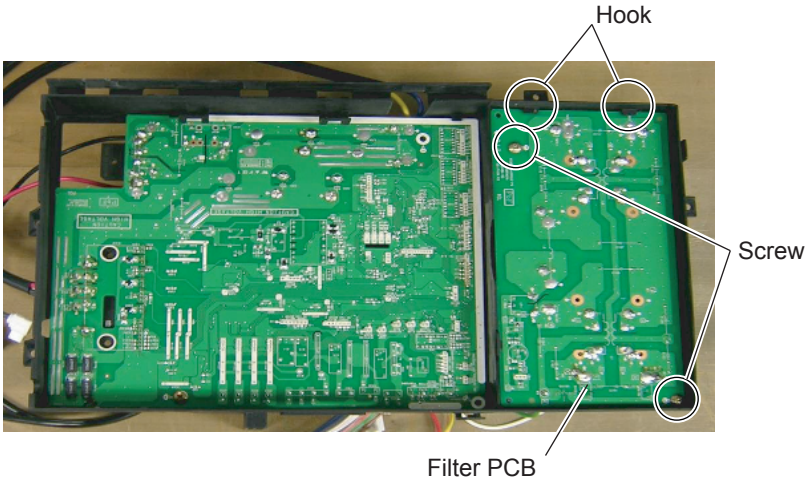

VIEW - A

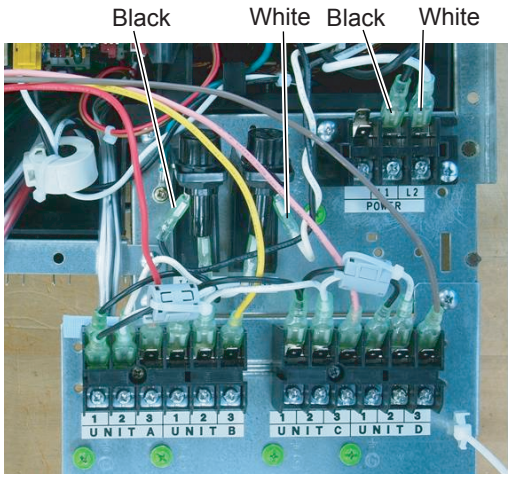

VIEW - B

7. ACTPM removal

- Remove the connectors and cords. (Refer to VIEW -F)
- Remove the 2 mounting screws. (Refer to VIEW -F)
- Remove the ACTPM (Active Filter Module).

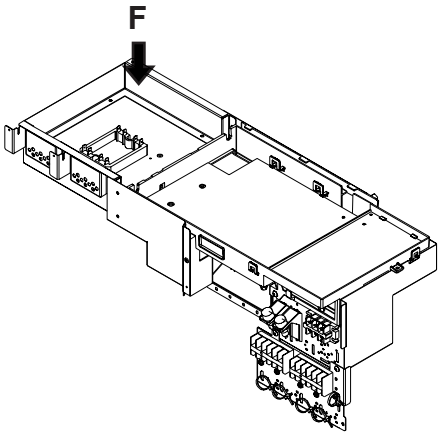

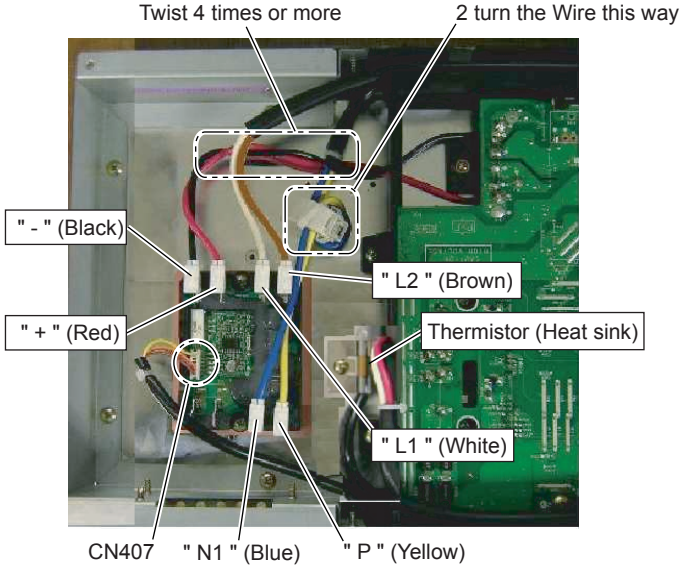

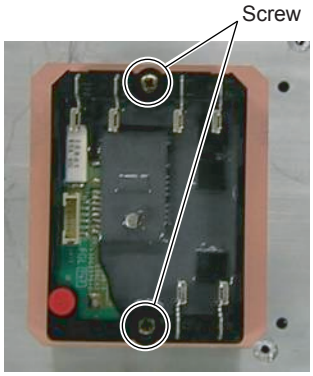

Spread the heat dissipation compound
on the other side of ACTPM,
when you exchange ACTPM by the repair.

VIEW - F

8. Valve Cover sub assy removal

- Remove the 3 mounting screws.
- Remove the Valve Cover sub assy.

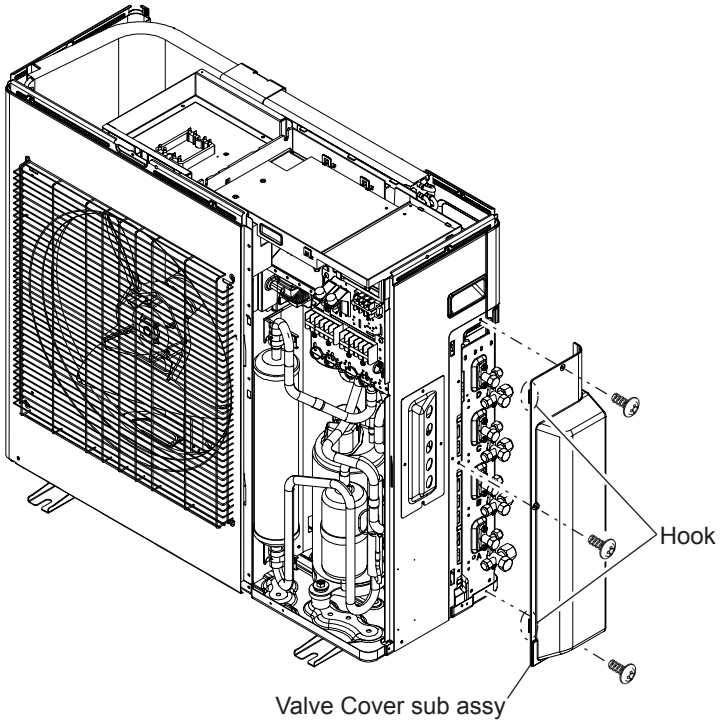

9. Thermo Holder removal

- Remove the 1 mounting screw.
- Remove the Thermo Holder by sliding upward.

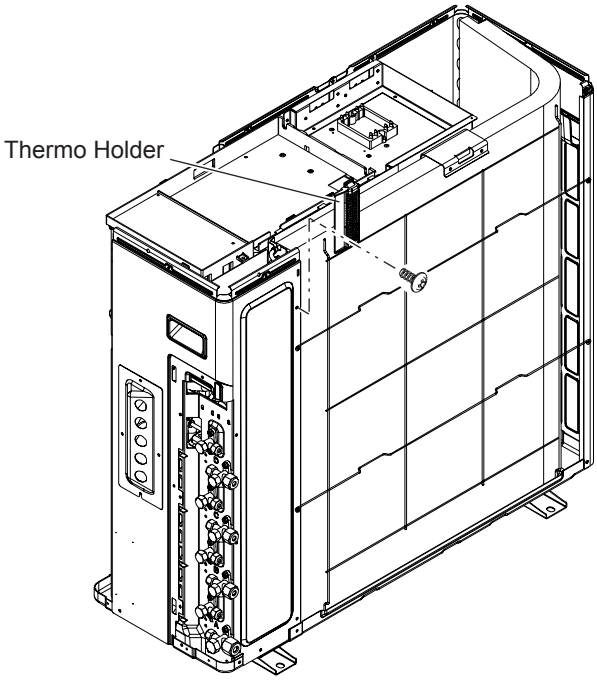

10. Right Panel sub assy removal

- Remove the 13 mounting screws.

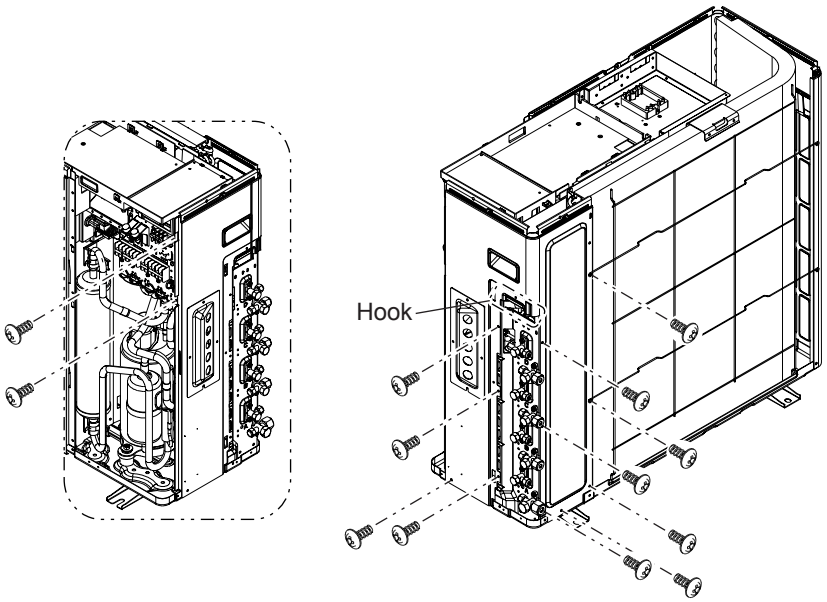

- Remove the Right Panel sub assy by sliding upward.

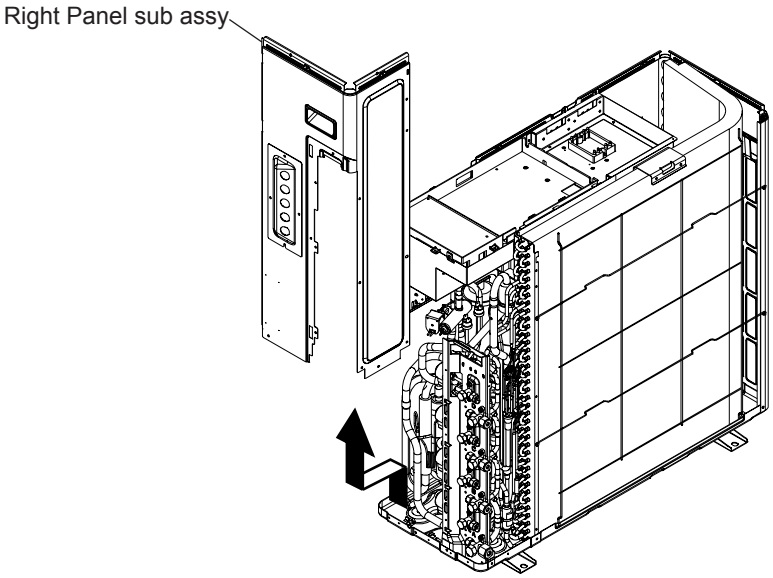

FUJITSU

FUJITSU GENERAL LIMITED

3-3-17,Suenaga,Takatsu-ku,Kawasaki 213-8502,Japan

June. 2022 (Revised)
September. 2021 (Revised)
May. 2014 (Revised)
Novenber. 2013 (Revised)
June. 2011 (Issued)