ADJUSTABLE FLASHING DRAIN

833 SERIES

FinishLine™

ITEM # SUBMITTED_____

JOB NAME_____

LOCATION _____

ENGINEER_____

CONTRACTOR_____

PO#_____ TAG _____

SPECIFICATION

Sioux Chief 833 series FinishLine adjustable above-grade flashing drain shall be used where necessary in drainage systems. Flashing drain shall allow adjustment of 1¼" before the concrete pour, and 1¼" after the concrete pour. Flashing drain shall have an invertible flashing collar with openings to allow secondary drainage and ABS/PVC base adapter. Strainer shall meet applicable load requirements for intended use. Trap primer port shall be threaded ½" FIP for optional connection. Designed in accordance with ASME A112.6.3-2001.

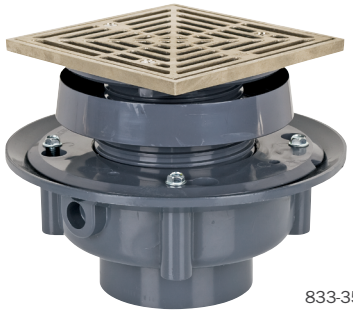

833-35PNQ

MATERIALS

Ring/strainer: nickel-bronze, stainless steel
Head adapter/Coring sleeve/Clamping collar: gray ABS
Coring plug: high-impact polymer
Base adapter: ABS, PVC

STRAINER LOAD RATING

	Large Top:	Std. Top
Nickel-bronze (heel-proof):	750 lbs. (light duty)	1,650 lbs. (light duty)
Stainless steel (heel-proof):	1,000 lbs. (light duty)	2,000 lbs. (light duty)

STRAINER FREE AREA

	Large Top:	Std. Top
Round Nik-Brz/Stainless:	13.4 in^2	8.5 in^2
Square Nik-Brz/Stainless:	16.4 in^2	12.75 in^2

DIMENSIONS

A:	Connection size	2", 3", 4" Sch. 40 hub
B:	Ring/strainer diameter	
	Round (Std. /Large)	5½" / 6½"
	Square (Std. /Large)	5⅞" / 7"
C:	Flange diameter	8½"
D:	Base Adapter height	
	2" / 3" / 4" connection	3⅛" / 3⅝" / 4"
E:	Pre-pour adjustable height*	
	2" / 3" / 4" connection	4¼" – 6½" / 4¾" – 7" / 5⅛" – 7⅜"
F:	Post-pour adjustable height	
	round / square	0" – 1¼" / 5/16" – 1¼"

* Max height noted with inverted flashing collar

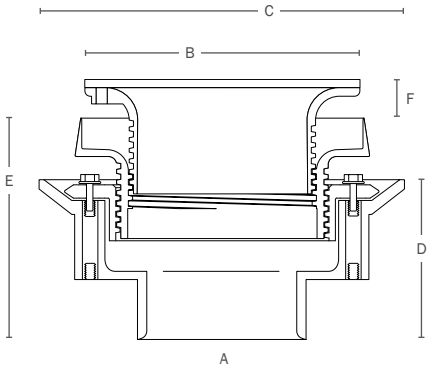

Create Item Number

833-A B C D

e.g. 833-35PNQ: FinishLine 3" Sch. 40 hub adjustable flashing drain with square nickel-bronze ring and strainer

A: CONNECTION SIZE/TOP SIZE
- ☐ **2** = 2" conn. / Large top
- ☐ **25** = 2" conn. / Std. top
- ☐ **3** = 3" conn. / Large top
- ☑ **35** = 3" conn. / Std. top
- ☐ **4** = 4" conn. / Large top

B: CONNECTION TYPE
- ☑ **A** = ABS Sch. 40 hub
- ☐ **P** = PVC Sch. 40 hub

C: RING/STRAINER TYPE
- ☑ **NR** = Round nickel-bronze
- ☐ **SR** = Round stainless steel
- ☐ **NQ** = Square nickel-bronze
- ☐ **SQ** = Square stainless steel

D: OPTIONS (installed)
- ☐ **V** = Vandal-resistant strainer screws
- ☐ **B** = Complies with Buy American Act[1]
- ☐ **E** = 1¼" extended strainer rim[1]
- ☐ **H** = Hinged strainer[2]

Available separately:
- Leveling shim kit for Std. top: 832-S3
- Leveling shim kit for Large top: 832-S4
- Stainless mesh debris bucket for Large top: 832-UM
- Flexible locating bristles kit: 832-W
- Ductile extension adapter for Std. top[3]: 832-EX3
- Ductile extension adapter for Large top[3]: 832-EX4
- Round nik-brz condensate funnel: 863-FN
- Oval nik-brz condensate funnel: 863-FNO
- Round aluminum condensate funnel: 863-FA

1 Available for round NB strainers only
2 Available for Large top only
3 Extends head 2" (min) to 4" (max) above Coring Sleeve