AXOR Montreux
Thermostatic Trim with Volume Control and Diverter
Finish: **Brushed Nickel** Part no. : **16821821**



Description

Features

- Volume control and diverter for 2 functions
- Thermostatic cartridge, Shut-off/ diverter valve
- Flow: 7.0 GPM (26.5 L/Min)
- Safety stop at 40 °C

Item details

List Price	$ 1,939.00

Compliance / Sustainability

Product image



Scale drawing

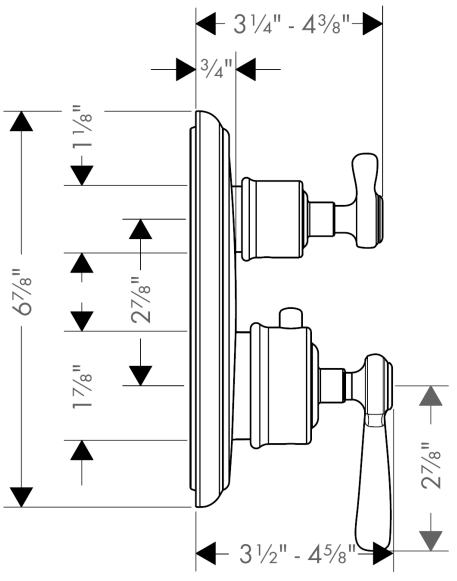

AXOR Montreux
Thermostatic Trim with Volume Control and Diverter
Finish: **Brushed Nickel** Part no. : **16821821**



Exploded drawing

Year of production: **>08/13**

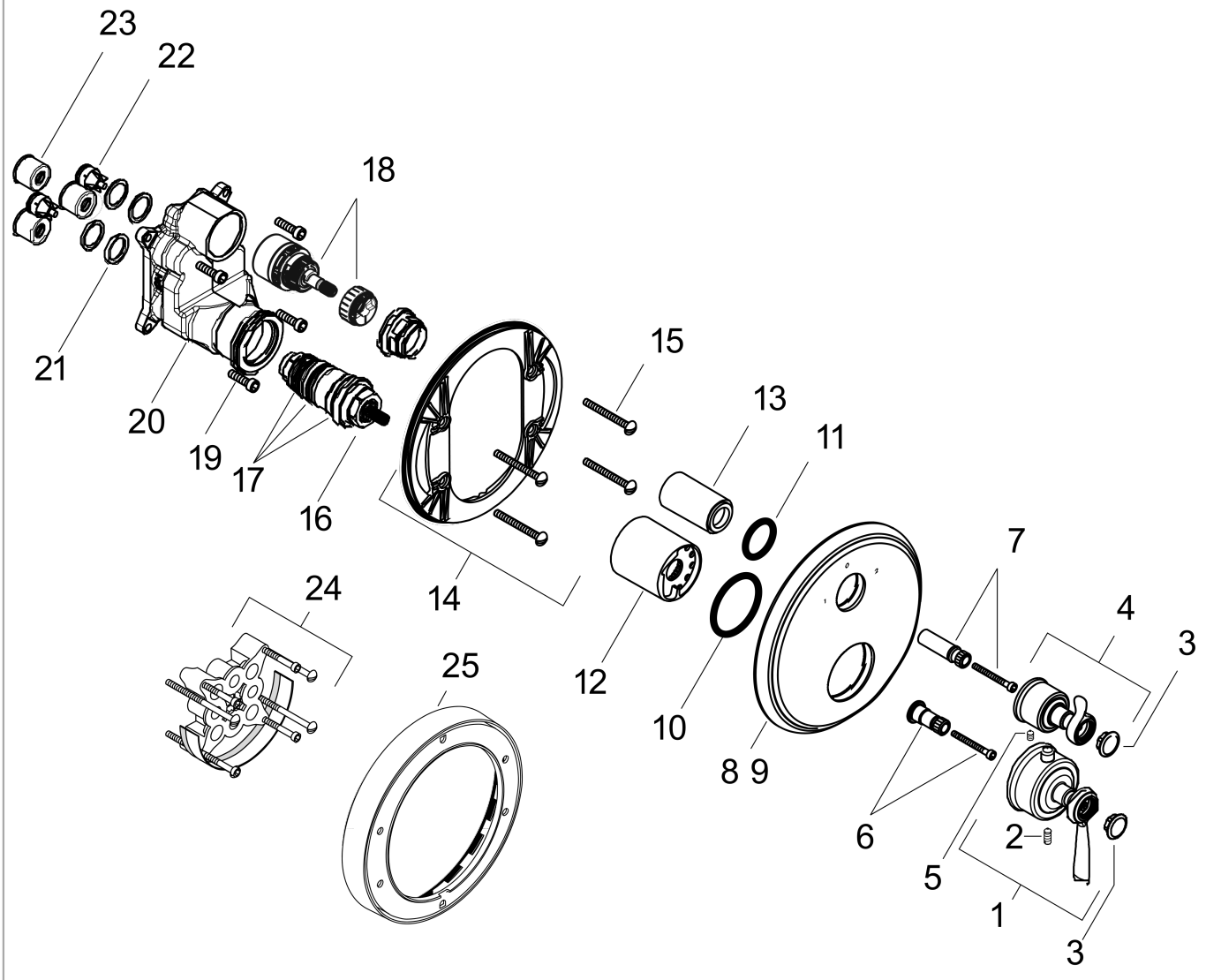

AXOR Montreux
Thermostatic Trim with Volume Control and Diverter
Finish: **Brushed Nickel** Part no. : **16821821**



Spare parts list

Year of production: **>08/13**

Pos.	Description	Part no.	Price	PU
1	handle for thermostat	16694821	-	1
2	hollow set screw M5x16	97666000	-	1
3	set of screw covers, cold / hot water / neutral	97987000	-	1
4	handle	98637820	-	1
5	hollow set screw M4x8	97669000	-	1
6	adapter for handle	96435000	-	1
7	adapter for handle	96451000	-	1
8	escutcheon	98638820	-	1
9	escutcheon for exchanged connections	95829000	-	1
10	O-Ring 48x3	95508000	-	1
11	O-ring 29x3	98371000	-	1
12	sleeve	96446820	-	1
13	sleeve	96439820	-	1
14	sub plate	96447000	-	1
15	set of fixing screws	96454000	-	1
16	thermostat cartridge	94282000	-	1
17	sealing set	95037000	-	1
18	shut off unit with selector	98283000	-	1
19	set of screws	96525000	-	1
20	installation unit cpl.	92592000	-	1
21	O-ring 16x2	98133000	-	1
22	set of non return valves DW 15	97350000	-	1
23	noise reduction	94073000	-	1
24	extension 25 mm	13595000	-	1
25	extension 22 mm (Ø 170 mm)	13596820	-	1