GRUNDFOS

Submittal Data

PROJECT:	_____	UNIT TAG:	_____	QUANTITY:	_____
	_____	TYPE OF SERVICE:	_____		_____
REPRESENTATIVE:	_____	SUBMITTED BY:	_____	DATE:	_____
ENGINEER:	_____	APPROVED BY:	_____	DATE:	_____
CONTRACTOR:	_____	ORDER NO.:	_____	DATE:	_____

IO 101

Product photo could vary from the actual product

Accessories

Conditions of Service	
Flow:	_____
Head:	_____
Efficiency:	_____
Liquid:	_____
Temperature:	_____
NPSH required:	_____
Viscosity:	_____
Specific Gravity:	_____

Pump Data	
Maximum ambient temperature:	122 °F
Product number:	96475074

Motor Data	
Rated voltage:	230 VAC - 15%/+10%
Main frequency:	50 Hz
Enclosure class:	IP55

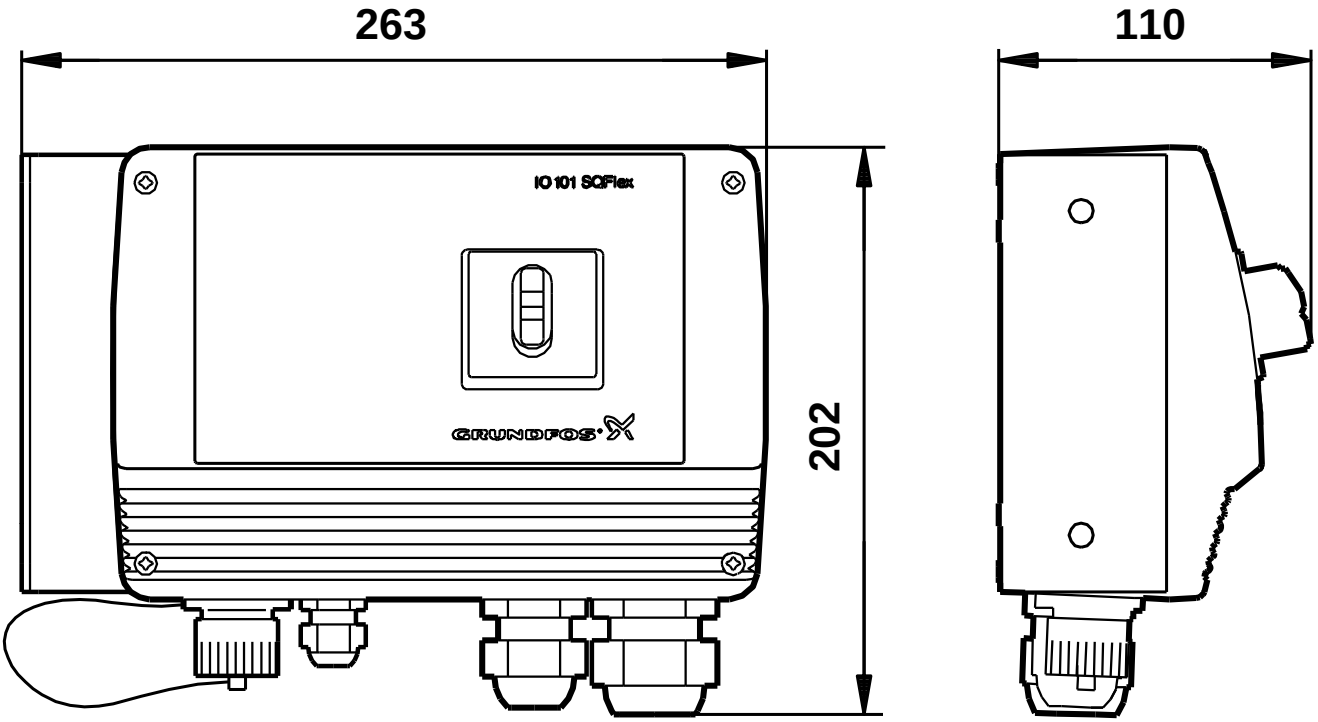
263
110
202
IO 101 SQFlex
GRUNDFOS

Company name:
Created by:
Phone:

Date: 2/22/2018

Tender Text

Product photo could vary from the actual product

Product No.: 96475074
IO 101

The IO 101 switch box is designed specifically for solar powered SQFlex systems. The IO 101 enables the connection of a generator supply back-up in case of insufficient solar radiation. The switching between solar power and generator must be made manually.

In case the generator is stopped manually or runs out of fuel, the IO 101 will automaticly switch to the solar energy supply.

The IO 101 functions as a connection box joining all necessary cables.

Installation:

Range of ambient temperature:	-22 .. 122 °F

Electrical data:

Main frequency:	50 Hz
Rated voltage:	1 x 230 VAC - 15%/+10%
Enclosure class (IEC 34-5):	IP55

Company name:
Created by:
Phone:

Date: 2/22/2018

Position	Count	Description
	1	**IO 101**

Product photo could vary from the actual product

Product No.: 96475074

The IO 101 switch box is designed specifically for solar powered SQFlex systems. The IO 101 enables the connection of a generator supply back-up in case of insufficient solar radiation. The switching between solar power and generator must be made manually.

In case the generator is stopped manually or runs out of fuel, the IO 101 will automaticly switch to the solar energy supply.

The IO 101 functions as a connection box joining all necessary cables.

Installation:

Range of ambient temperature: -22 .. 122 °F

Electrical data:

Main frequency:	50 Hz
Rated voltage:	1 x 230 VAC - 15%/+10%
Enclosure class (IEC 34-5):	IP55

Company name:
Created by:
Phone:

Date: 2/22/2018

Description	Value
General information:	
Product name:	IO 101
Product No.:	96475074
EAN:	5700395151787
Installation:	
Range of ambient temperature:	-22 .. 122 °F
Electrical data:	
Main frequency:	50 Hz
Rated voltage:	1 x 230 VAC - 15%/+10%
Enclosure class (IEC 34-5):	IP55
Maximum load:	30-225 VDC, 8,4A

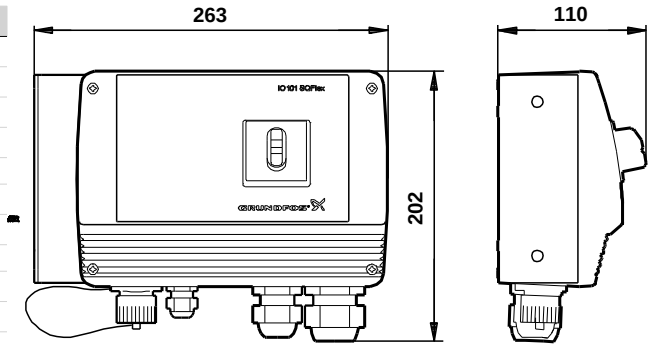

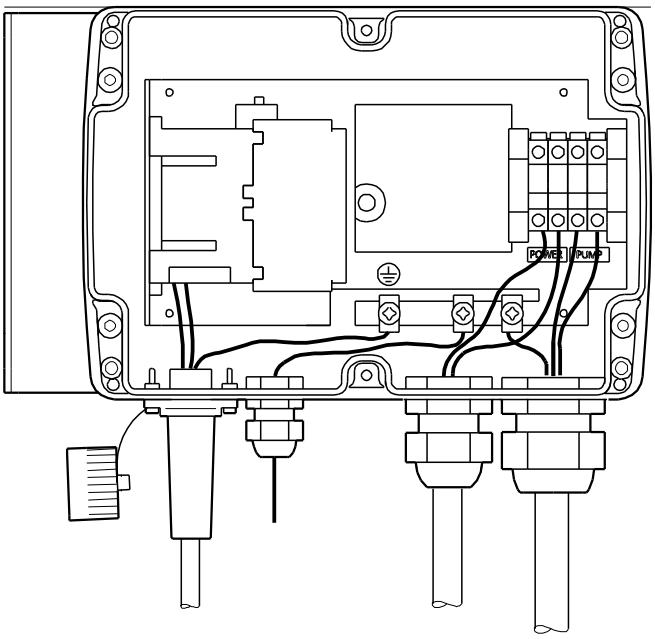

Company name:
Created by:
Phone:

Date: 2/22/2018

96475074 IO 101 50 Hz

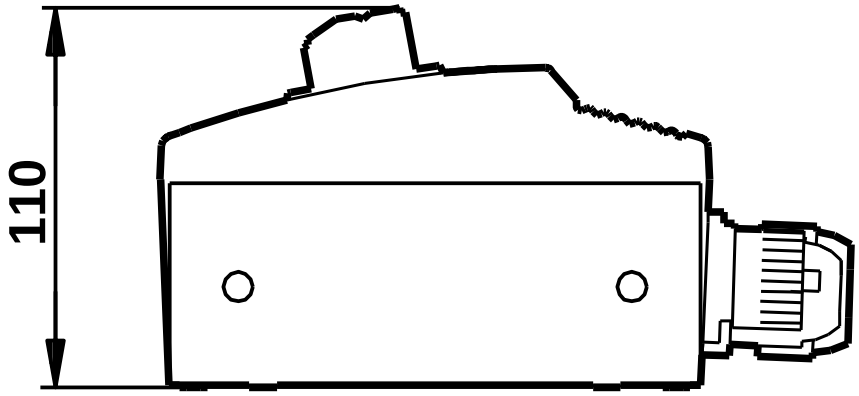

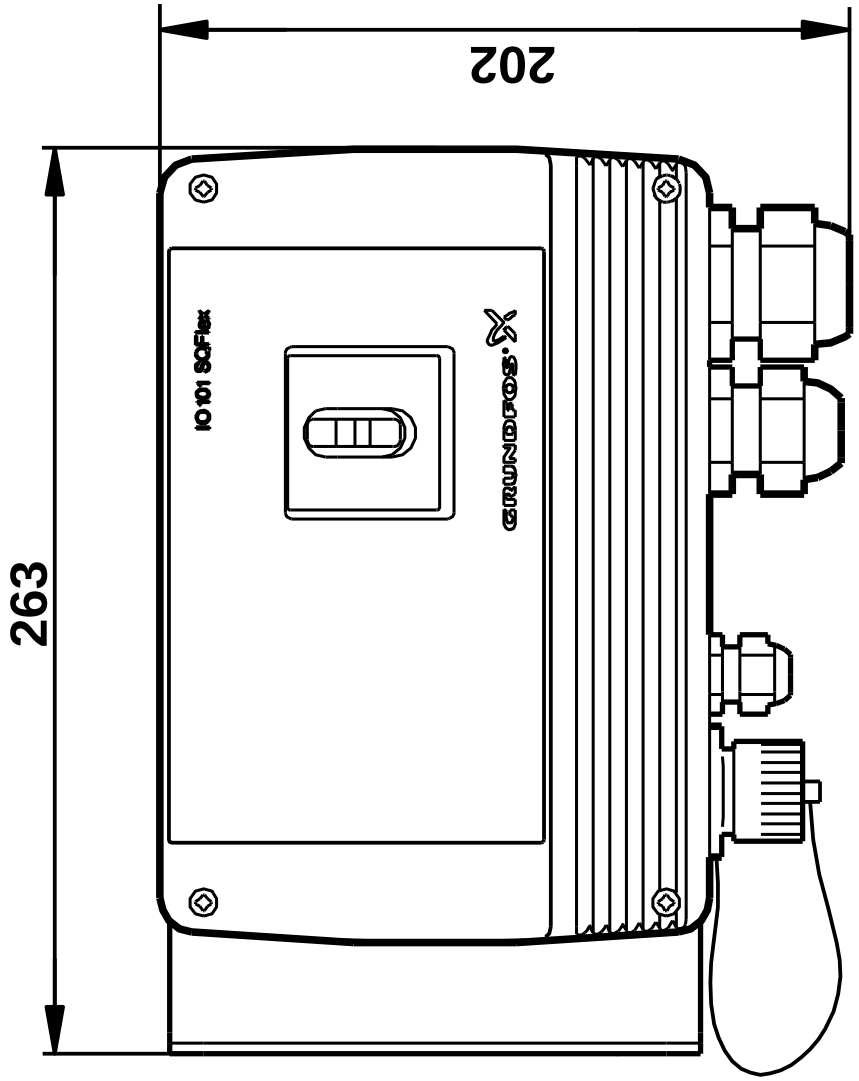

Note! All units are in [mm] unless otherwise stated.
Disclaimer: This simplified dimensional drawing does not show all details.

Company name:
Created by:
Phone:

Date: 2/22/2018

96475074 IO 101 50 Hz

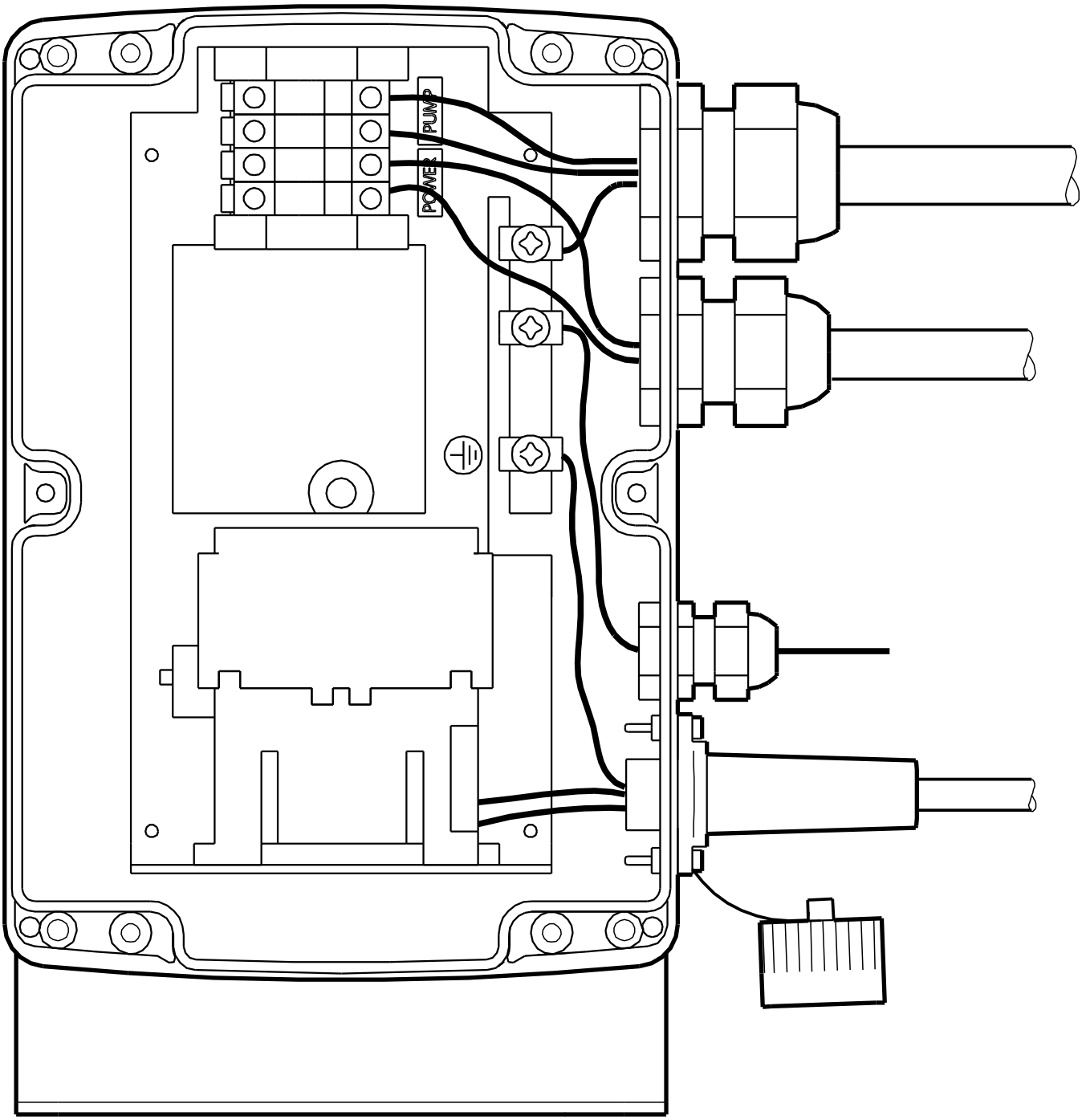

All units are [mm] unless otherwise presented.

Company name:
Created by:
Phone:

Date: 2/22/2018

Order Data:

Product name: IO 101
Amount: 1
Product No.: 96475074

Total: Price on request