SMART Digital XL

DIGITAL DOSING

DDA, DDE
Pumps and accessories

be
think
innovate

GRUNDFOS

Table of contents

1. General data 3
Performance range 3
Features at a glance 4

2. Identification 6

3. Functions overview 7
Overview of functions 7
Functional description 8

4. Functions DDA 9
Operating elements DDA 9
Operating modes DDA 10
Functions DDA 12
Wiring diagram, DDA 18

5. Functions DDE 19
Operating elements DDE 19
Operating modes DDE 20
Functions DDE 21
Wiring diagram, DDE 22

6. Construction 23
DDA 23
DDE 24

7. Dimensions 25

8. Technical data 26
DDA 26
DDE 28

9. Pump selection 29
DDA, standard range 29
DDE, standard range 31
DDA, DDE, non-standard range 32

10. Accessories for medium-sized dosing pumps 33
Accessories overview 33
Cables and plugs 34
Foot valves FV 35
Rigid suction lances (RSL) 36
Level-control units 40
Injection units 41
Pressure relief valves (PRV) 42
Back pressure valve (BPV) 43
Pressure valves (PV) 44
Pump connection kits and inlay kits 45
Adapters 46
Tank accessories 47

11. Pumped liquids 48

12. Grundfos Product Center 49

1. General data

Performance range

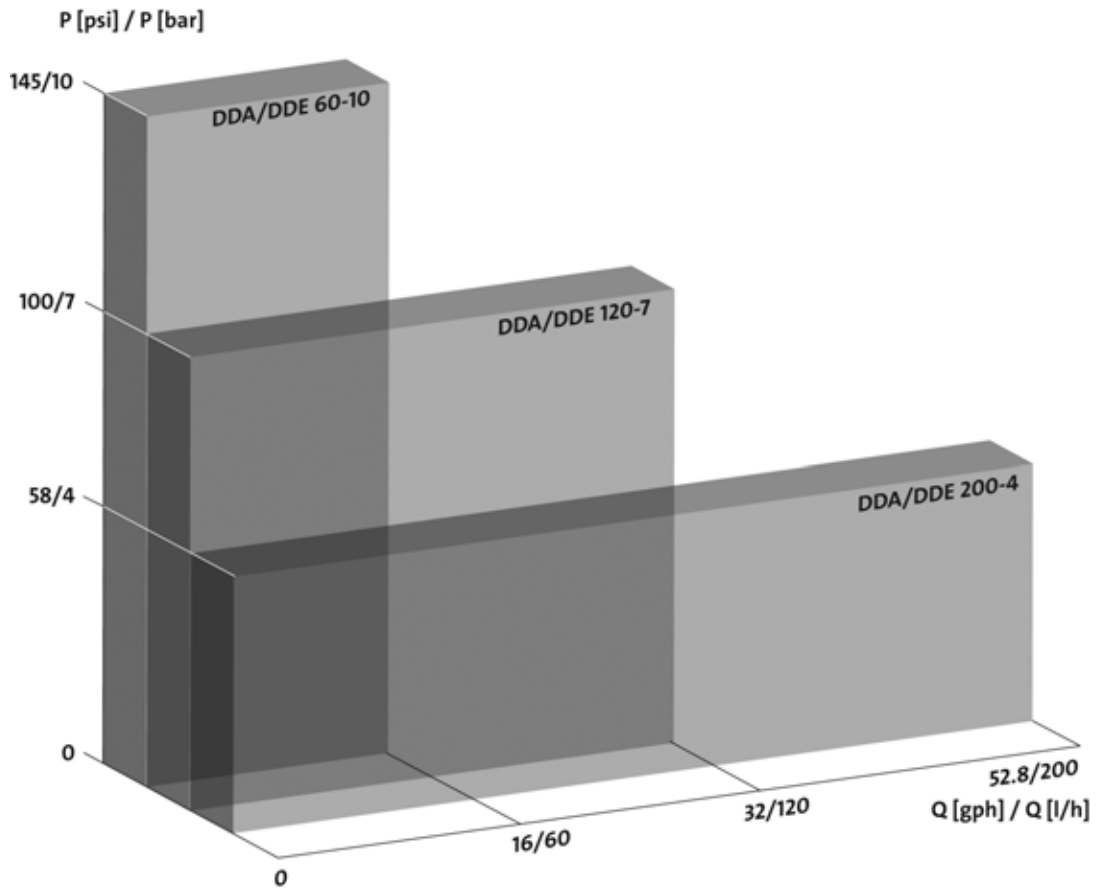

Fig. 1 Performance range

Features at a glance

TM06 7328 3316

Fig. 2 DDA, DDE

Digital Dosing™

The SMART Digital XL generation DDA and DDE with powerful PMS (Permanent Magnet Synchronous) motor brings state-of-the-art technology to perfection. Combined expert knowledge and the patented solutions set future standards. Traditional technologies such as stroke length or stroke frequency adjustment with asynchronous motor become a thing of the past.

Unique flexibility with only a few variants

The mounting plate included with the pump adds to the flexibility of the installation. Service and pump exchange is easy and fast: Just dismantle the pump from the mounting plate by removing two screws.

The control cube of the pump can be lifted and turned into three different positions: front, left or right.

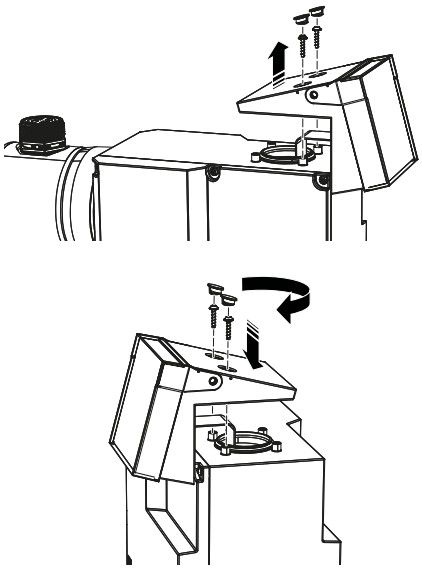

TM06 7329 3316

Fig. 3 Modularity of the control cube

A turn-down ratio of800:1, a wide supply voltage range (100-240 V, 50/60 Hz), combined connection sets and other features reduce the models and variants to a minimum.

Precise and easy setting / usability and interaction

The operator can easily install the pump and set it to discharge the exact quantity of liquid required for the application. The display on the DDA pump will directly read the flow rate setting in gph, l/h or ml/h.

The click wheel (turn-and-push knob) and the graphical LC display with plain-text menu in up to 28 languages make commissioning and operation intuitive. As the LCD is backlit in different colors, the pump status can be seen from a distance (traffic-light concept).

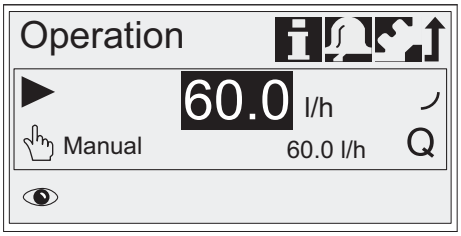

TM06 7330 3316

Fig. 4 Display DDA

Thanks to a variety of operating modes, signal inputs and outputs, the pump can be integrated easily into most processes.

Advanced process reliability

An intelligent drive and microprocessor control ensures that dosing is performed precisely and with low pulsation, even if the pump is dosing high-viscosity or off-gassing liquids. Malfunctions, caused by air bubbles for example, are detected quickly by the maintenance-free FlowControl system and then displayed in the alarm menu.

The AutoFlowAdapt function automatically adjusts the pump according to the process conditions, such as varying back pressure. The integrated flowrate measurement makes additional monitoring and control equipment redundant.

Designed to save costs

In general, the investment for a dosing pump installation is low compared to its life cycle costs including the cost of the chemicals. The following features contribute to low life cycle costs of the SMART Digital XL DDA and DDE pumps:

- No underdosing or overdosing due to high dosing accuracy and FlowControl
- Longer maintenance intervals thanks to the universal chemical resistance of the double full-PTFE diaphragm
- Reduced energy consumption thanks to state-of-the-art drive technology.

Two application-oriented type ranges

DDA

DDA is the high-end pump range for extended flow and pressure ranges with sensor-based FlowControl and measurement functions for challenging industrial applications, such as:

- drinking water treatment
- wastewater treatment
- boiler water treatment
- cooling water treatment
- process water treatment
- chemical industry
- ultrafiltration process and reverse osmosis
- food and beverage industry
- paper and pulp industry.

DDE

DDE is the economical pump range with basic functions, including manual operation or control via PLC for OEM applications, such as:

- drinking water treatment
- wastewater treatment
- boiler water treatment
- cooling water treatment
- process water treatment
- chemical industry
- ultrafiltration process and reverse osmosis
- food and beverage industrypaper and pulp industry
- irrigation
- swimming pool water.

2. Identification

The type key is used to identify the precise pump and is not used for configuration purposes.

Example: **DDA 60-10 FCM-PVC/V/C-F-31U3U3FG**

Type	
DDA 60-10 FCM-PVC/V/C-F-31U3U3FG	
DDA	
DDE	

Max. flow rate [l/h]	
DDA **60**-10 FCM-PVC/V/C-F-31U3U3FG	

Max. pressure [bar]	
DDA 60-**10** FCM-PVC/V/C-F-31U3U3FG	

Control variant	
DDA 60-10 **FCM**-PVC/V/C-F-31U3U3FG	
B	Basic (only DDE)
AR	DDA: Alarm relay DDE: B with pulse mode, analog mode and alarm relay
FCM	AR + FlowControl function

Dosing head variant	
DDA 60-10 FCM-**PVC**/V/C-F-31U3U3FG	
PVC	Polyvinyl chloride
PV	PVDF
SS	Stainless steel 316/1.4401
PVC-L	PVC + integrated diaphragm leakage detection
PV-L	PV + integrated diaphragm leakage detection
SS-L	SS + integrated diaphragm leakage detection

Gasket material	
DDA 60-10 FCM-PVC/**V**/C-F-31U3U3FG	
E	EPDM
V	FKM
T	PTFE

Valve ball material	
DDA 60-10 FCM-PVC/V/**C**-F-31U3U3FG	
C	Ceramic
SS	Stainless steel 316/1.4401

Control cube	
DDA 60-10 FCM-PVC/V/C-**F**-31U3U3FG	
F	Front mounted (change to left or right is possible)

Supply voltage	
DDA 60-10 FCM-PVC/V/C-F-**3**1U3U3FG	
3	100-240 V 50/60 Hz single phase

Valve type	
DDA 60-10 FCM-PVC/V/C-F-3**1**U3U3FG	
1	Standard
2	Spring-loaded

Connection, inlet/outlet	
DDA 60-10 FCM-PVC/V/C-F-31**U3U3**FG	
U3U3	2x union nut G 5/4"
	2x hose connector 19/20 mm
	2x hose clamp
	2x pipe connector 25 mm
A7A7	2x union nut G 5/4"
	2x inlay external thread 3/4" NPT
A1A1	2x union nut G 5/4" (SS)
	2x inlay internal thread Rp 3/4" (SS)
A3A3	2x union nut G5/4 (SS)
	2x inlay internal thread 3/4" NPT (SS)

Mains plug	
DDA 60-10 FCM-PVC/V/C-F-31U3U3**F**G	
F	EU (Schuko)
B	USA, Canada
G	UK
I	Australia, New Zealand, Taiwan
E	Switzerland
J	Japan
L	Argentina

Design/approval	
DDA 60-10 FCM-PVC/V/C-F-31U3U3F**G**	
G	Grundfos red
A	Grundfos green
B	Grundfos black
X	Neutral/black
C	China approval

Special variant	
DDA 60-10 FCM-PVC/V/C-F-31U3U3FG**C3**	
	Standard
C3	Inspection certificate 3.1 (EN 10204)

3. Functions overview

Overview of functions

	DDA		DDE	
Control variant:	FCM	AR	AR	B
General				
Digital dosing: internal stroke speed control and frequency control	●	●	●	●
Mounting plate	●	●	●	●
Control panel, see pages 9 and 19				
Control cube mountable in three positions: front, left, right	●	●	●	●
Transparent protective cover for control elements	●	●	●	●
Capacity setting in milliliters, liters or US-gallons	●	●		
Graphical display with background light in four colors for status indication: white, green, yellow, red	●	●		
LEDs for operating mode, warning and alarm			●	●
Plain-text menu in different languages	●	●		
Turn-and-push knob (click wheel) for easy navigation	●	●		
Capacity adjusting knob (0.125 - 100 %)			●	●
Start/stop key	●	●		
100 % key (deaeration)	●	●	●	
Operating mode key (manual/pulse/analog)			●	
Operating modes, see pages 10 and 20				
Manual speed control	●	●	●	●
Pulse control in ml/pulse	●	●		
Pulse control (1:n)			●	
Analog control 4-20 mA			●	
Analog control 0/4-20 mA	●	●		
Batch control (pulse-based)	●	●		
Dosing timer cycle	●	●		
Dosing timer week	●	●		
Fieldbus control	●	●		
Functions, see pages 12 and 21				
Auto deaeration also during pump standby	●	●		
FlowControl system with selective fault diagnosis	●			
Pressure monitoring (minimum/maximum)	●			
Flow rate measurement	●			
AutoFlowAdapt	●			
SlowMode (anti-cavitation)	●	●		
Calibration mode	●	●		
Full scaling of analog input	●	●		
Scaling of maximum analog input			●	
Service information display	●	●		
Relay setting: alarm, warning, stroke signal, pump dosing, pulse input*	●	●	●	
Relay setting (additionally): timer cycle, timer week	●	●		
Inputs/outputs, see pages 12 and 21				
Input for external stop	●	●	●	
Input for pulse control	●	●	●	
Input for analog 4-20 mA control			●	
Input for analog 0/4-20 mA control	●	●		
Input for low-level signal	●	●	●	
Input for empty tank signal	●	●	●	
Output relay (two relays)	●	●	●	
Output analog 0/4-20 mA	●	●		
Input/output for GENIbus	●	●		
Input for software update	●	●	●	●
Input/output for CIU (Profibus DP, Modbus, GRM, Ethernet etc.)	●	●		

* DDE-AR: relay 1: alarm; relay 2: low-level signal, stroke signal, pulse input

Functional description

The electronically controlled PMS (Permanent Magnet Synchronous) motor of the DDA and DDE pumps provides optimum control of the stroke speed. The duration of each discharge stroke varies according to the capacity set, resulting in optimum dosing flow rate in any operating situation, while the duration of each suction stroke is constant (see figure below).

The advantages are as follows:

- The pump always operates at full stroke length, irrespective of the capacity set; this ensures optimum accuracy, priming and suction.
- A capacity rangeof 800:1 (turn-down ratio) reduces the need for variants and spare parts.
- Smooth and continuous dosing ensuring an optimum mixing ratio at the injection point without the need for static mixers.
- Significant reduction of pressure peaks, preventing mechanical stress on wearing parts such as diaphragm, tubes and connections, resulting in extended maintenance intervals.
- The installation is less affected by long inlet and outlet lines.
- Easier dosing of high-viscosity and off-gassing liquids (SlowMode).

The optimum dosing control shown below takes place in any operating mode.

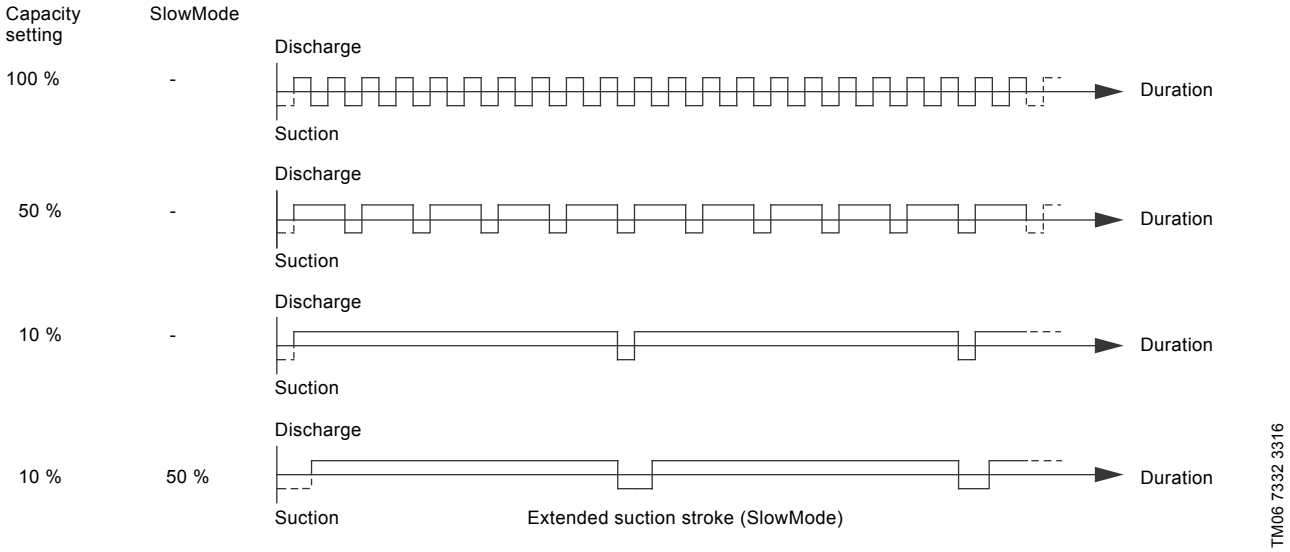

Fig. 5 Relation between stroke-frequency adjustment and capacity

4. Functions DDA

Operating elements DDA

The pump is supplied with front-mounted control cube. The position of the control cube can easily be changed by unfastening two screws, lifting the cube, turning it to the left or to the right and fastening both screws again.

Fig. 6 Two of three possible control cube positions

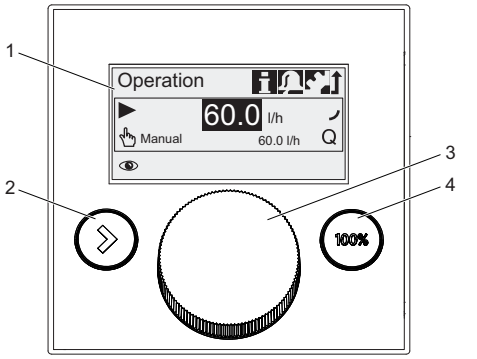

Fig. 7 Operating elements DDA

Pos.	Description
1	Graphical LC display
2	[Start/stop] key
3	Click wheel
4	[100%] key

The click wheel guides the user quickly and easily through the plain-text menu.

If maximum capacity is required over a short period of time, for example during startup, press the [100%] key. To set the pump to run for a specific number of seconds at maximum capacity, press the [100%] key and turn the click wheel clockwise simultaneously.

Menu

The DDA dosing pumps feature a user-friendly plain-text menu. The menu consists of four tabs:

- Operation
- Info
- Alarm
- Setup.

During initial startup, all menu text appears in English. The menu can be set to display other languages.

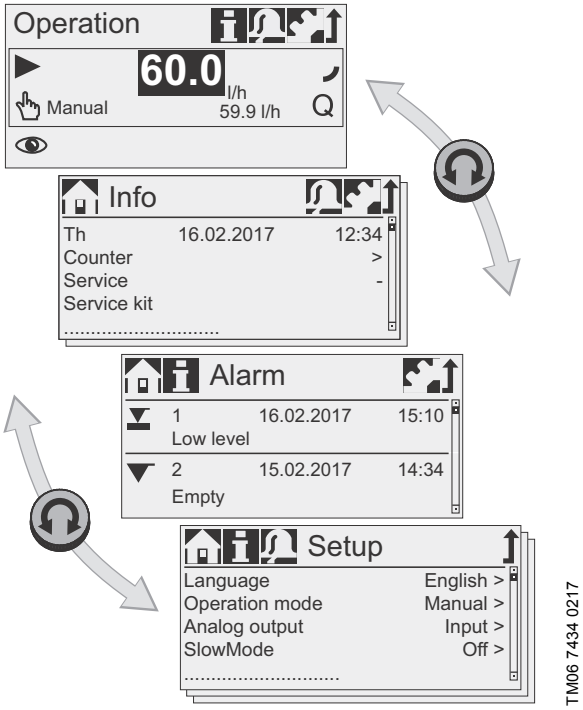

Fig. 8 Menu overview (example of main menus)

The menu text appears in up to 28 languages on a big graphical display, backlit in four different colors according to the "traffic light" concept.

Display	Fault	Pump status		
White	-	Stop ■	Standby ❚❚	
Green	-			Running ▶
Yellow	Warning	Stop ■	Standby ❚❚	Running ▶
Red	Alarm	Stop ■	Standby ❚❚	

Operating modes DDA

Manual control

In this operating mode, the pump constantly doses according to the dosing flow rate set with the click wheel. The units for the dosing flow rate can be set in gph, l/h or ml/h.

Setting range

Pump type	Setting range*	
	From [gph (l/h)]	To [gph (l/h)]
DDA 60-10	0.019 (0.075)	16 (60)
DDA 120-7	0.039 (0.15)	**32** (120)
DDA 200-4	0.066 (0.25)	**53** (200)

* When the SlowMode function is enabled, the maximum flow rate is reduced (see page 12).

Pulse control

In this operating mode, the pump doses according to the set dosing volume for each incoming (potential-free) pulse, for example from a water meter. There is no direct relation between pulses and dosing strokes. The pump automatically calculates the optimum stroke frequency for dosing the set volume per pulse.

The calculation is based on:

- the frequency of external pulses
- the set dosing volume/pulse.

The quantity to be dosed is set in ml/pulse.

Setting range

Pump type	Setting range [ml/pulse]
DDA 60-10	0.0111-111
DDA 120-7	0.0232-232
DDA 200-4	0.0386-386

The frequency of incoming pulses is multiplied by the set dosing volume. If the product exceeds the maximum flow rate of the pump, a maximum of 65,000 pulses can be stored for later processing with the pulse memory function, when activated.

Analog 0/4-20 mA control

In this operating mode, the pump doses according to the external analog signal. The dosing volume is proportional to the signal input value in mA.

Operating mode	Input signal [mA]	Dosing flow [%]
4-20	≤ 4.1	0
	≥ 19.8	100
0-20	≤ 0.1	0
	≥ 19.8	100

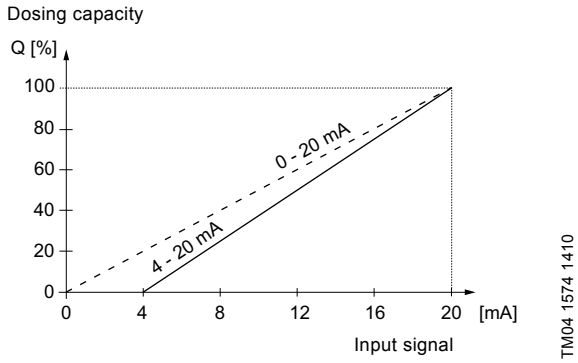

Fig. 9 0/4-20 mA control

With the analog scaling function, the curve can be individually drawn between two arbitrary points: I_1/Q_1 and I_2/Q_2.

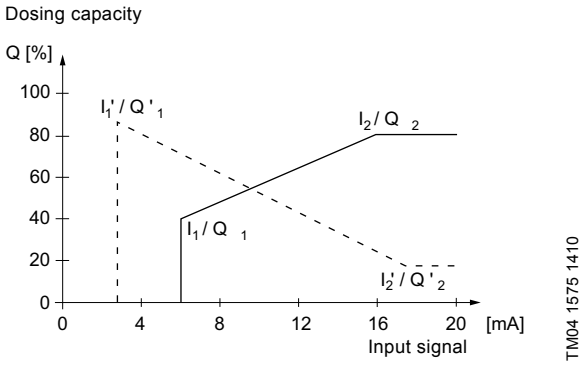

Fig. 10 Analog scaling

Pulse-based batch control

The set quantity is dosed in batches within the set dosing time (t_1). A batch is dosed every time the pump receives an external pulse. If the pump receives new pulses before a batch is completed, these pulses will be ignored. In the event of interruptions such as external stop or alarm, incoming pulses will also be ignored. After ending of the interrupts, a new batch will be dosed with the next incoming pulse.

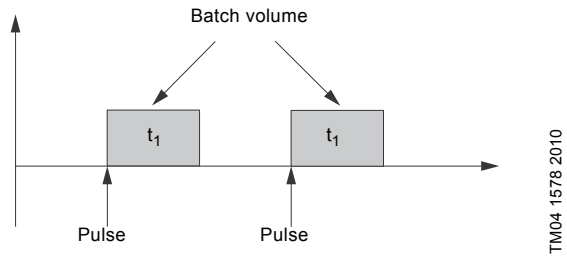

Fig. 11 Pulse-based batch control

Setting range

Pump type	Setting range		
	From [ml/batch]	To [l/batch]	Resolution [ml]*
DDA 60-10	5.56	999	0.694
DDA 120-7	11.6	999	1.45
DDA 200-4	19.3	999	2.41

* Thanks to the digital motor control, dosing quantities with a resolution of up to 1/8 of the dosing stroke volume can be dosed.

Dosing timer cycle

After a start delay (t_2), the set batch volume is repeatedly dosed in the set cycle time (t_3). The dosing time (t_1) can be adjusted. Batch dosing is stopped during any interruption, for example power supply failure or external stop while the time continues to run in the background (real-time clock). When the interruption has ceased, batch dosing proceeds according to the current status in the timeline.

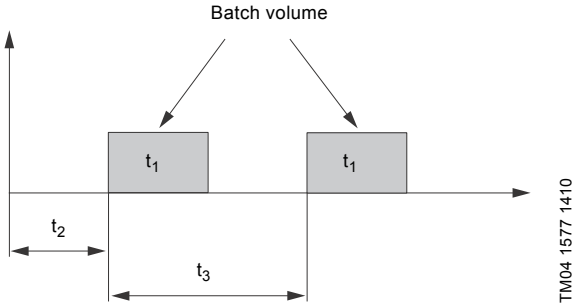

Fig. 12 Dosing timer cycle

Setting range

The batch volume setting range corresponds to the pulse-based batch control setting range.

Dosing timer week

The integrated real-time clock also features batch dosing based on a weekly period. There is a maximum of 16 procedures per week. Each dosing procedure consists of:

- batch volume
- dosing time
- start time
- 1 to 7 weekdays (Monday to Sunday).

In case several procedures are overlapping, the procedure with the highest flow rate has the highest priority. Batch dosing is stopped during any interruption, for example power supply failure or external stop, while the time continues to run in the background (real-time clock). When the interruption has ceased, batch dosing proceeds according to the current status in the timeline.

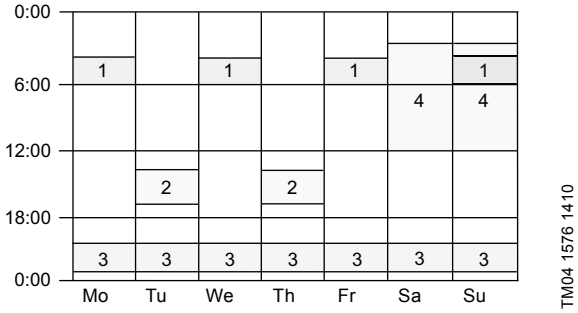

Fig. 13 Dosing timer week (example with four procedures)

Setting range

The batch volume setting range corresponds to the pulse-based batch control setting range.

Functions DDA

SlowMode

When the SlowMode function (anti-cavitation) is selected, the pump extends and slows its suction stroke. This results in a softer suction stroke.

The SlowMode function is used in these situations:

- when pumping high-viscosity liquids
- when pumping off-gassing liquids
- when the inlet line is long
- when the suction lift is high.

Depending on the application, the motor speed during the suction stroke can be reduced individually to approximately 50 % or 25 % of the normal motor speed.

The maximum pump capacity is reduced accordingly. See page 26 for further details.

Auto deaeration

The auto deaeration function avoids disruption of the dosing process due to air-locking when dosing off-gassing liquids such as sodium hypochlorite. During long dosing breaks, for example on weekends or overnight, air-bubbles can form in the inlet line and enter the dosing head. If too much air is trapped in the dosing head, and the dosing process is started again, no liquid will be dosed (air-lock). Software-controlled diaphragm movements at regular intervals encourage the air bubbles to rise and finally to exit the dosing head.

These movements take place

- when the pump is not stopped and
- during standby (for example external stop or no incoming pulses).

Calibration

The pump is calibrated from the factory at the nominal pressure of the respective pump type. (See section *8. Technical data* (maximum pressure)). After startup, the dosing pump can be calibrated for the actual installation to ensure that the displayed value (ml/h, l /h or gph) is correct. A calibration program in the setup menu facilitates this process. The AutoFlowAdapt function keeps the dosing precision (DDA-FCM control variant), even if the back pressure changes.

For a description of the AutoFlowAdapt function, see page 17.

External stop

With the external stop function, the pump can be stopped remotely via an external contact. We do not recommend that you switch the power supply on and off as was the usual procedure with conventional dosing pumps. When working with microprocessor-controlled digital dosing pumps, the external stop signal has to be used, in order to keep the optimal dosing precision and to prevent damage to the electronics.

When activating the external stop signal, the pump changes from running ▶ to standby ❚❚. The signal input can be set to normally open (default) or normally closed contact. The operation display shows an activated external stop ▶❚❚.

Counters

The pump displays resettable and non-resettable counters in the info menu tab.

Counter	Description	Resettable
Volume	Accumulated dosed quantity in US gallons or liters	Yes
Operating hours	Accumulated number of operating hours (power-on)	No
Motor runtime	Accumulated number of motor runtime hours	No
Strokes	Accumulated number of dosing strokes	No
Power on/off	Accumulated number of times the mains supply has been switched on	No

Service display

Due to the optimized construction and the smooth digital dosing principle, the service periods are more than twice as long, if compared to conventional pumps. However, the wear parts have to be exchanged at regular intervals in order to keep the dosing precision and the process reliability at a high level. The service display in the pump shows when service of the wear parts is required. The displayed service kit product number makes service more convenient. The following information is displayed in the Info display:

Display		Description
Service	-	No service required
	Soon	Order parts for service soon
	Now	Service must be performed now
Service kit	8-digit Grundfos product number	The service kit contains all parts needed for standard maintenance: diaphragm + valves
Reset service system		After performing the service, reset the system

The following service messages appear, depending on what happens first:

Display	Motor runtime [h]	Regular intervals [months]
Service soon	7,500	23
Service now	8,000	24

In case of difficult liquids, the service intervals can be shorter and service has to be performed earlier.

Level control

The pump can be connected to a dual level control unit for monitoring of the chemical level in the tank. The pump can react to two level signals:

Level sensors	Pump reaction*
Low-level signal	• Display is yellow (warning) • is flashing • Pump continues to run
Empty-tank signal	• Display is red (alarm) • is flashing • Pump stops

* Depending on the pump model and settings, the relay outputs can be activated (see *Relay output*, page 13)

Relay output

The pump can switch between two external signals using installed relays. The relay outputs are potential-free.

Depending on the process control requirements, the following relay output settings can be chosen:

Signal		Description
Relay 1	Relay 2	
Alarm*	Alarm	Display red, pump stopped (empty tank signal etc.)
Warning*	Warning	Display yellow, pump running (low level signal etc.)
Stroke signal	Stroke signal	Every completed stroke
Pump dosing	Pump dosing*	Pump is running and dosing
Pulse input	Pulse input	Every pulse coming in from pulse input
Bus control	Bus control	Set by a command in the Bus communication function (page 14)
	Timer cycle	Timer can be set in menu: on-time, cycle-time, start delay
	Timer week	Timer can be set in menu: procedure, on-time, start time and weekdays
Contact type		
NO*	NO*	Normally Open Contact
NC	NC	Normally Closed Contact

* default setting

Analog output

In addition to the analog input (operating mode: analog 0/4-20 mA), the pump is also equipped with an analog 0/4-20 mA output signal. Depending on the process control requirements, the following analog output settings are available:

Setting	Description of analog output signal	Control variant	
		FCM	AR
Output = input	Analog feedback signal (not for master-slave application). The analog input signal is mapped 1:1 to the analog output.	X	X
Actual flow rate	Flow rate measured in the dosing head (Flow rate measurement,page 17)	X	X*
Back pressure	Back pressure measured in the dosing head (Pressure monitoring, page 17)	X	
Bus control	Set by a command in the bus communication (see below)	X	X

* Output signal is calculated based on motor speed and pump status (target flow rate).

Bus communication

BUS

The pump can be connected to a Grundfos CIU unit (Communication Interface Unit) equipped with one of the following CIM modules (Communication Interface Module):

- CIM150 Profibus
- CIM200 Modbus
- CIM270 GRM
- CIM500 Ethernet

For internal communication between the CIU and the dosing pump, GENIbus is used.

Key lock

To protect the pump from maloperation, a key lock can be set by entering a 4-digit PIN-code. When the pump is locked, it is still possible to navigate through the menus Alarm and Info and to acknowledge alarms. Two levels of protection are available:

- Settings: The keys and 100% are still available.
- Settings + keys: The keys and 100% are also locked.

For temporary (2 minutes) or final deactivation, the preset 4-digit pin-code has to be entered again.

Basic settings

The pump can be reset to the default settings. In addition, the current configuration of the pump can be stored and activated later. The configuration saved most recently is stored in the memory.

Units

It is possible to select US units (US gallons/psi) or metric units (liter/milliliter/bar).. Depending on the operating mode and menu, the following units are displayed:

Operating mode/function	Metric units	US units
Manual control	ml/h or l/h	gph
Pulse control	ml/⊓	ml/⊓
Analog 0/4-20 mA control	ml/h or l/h	gph
Batch control (pulse- or timer-based)	ml or l	gal
Calibration	ml	ml
Volume counter	l	gal
Pressure monitoring	bar	psi

Additional display

The additional display function provides further useful status information, for example the target flow rate as well as the actual flow rate. The value is shown in the operation display together with the corresponding symbol.

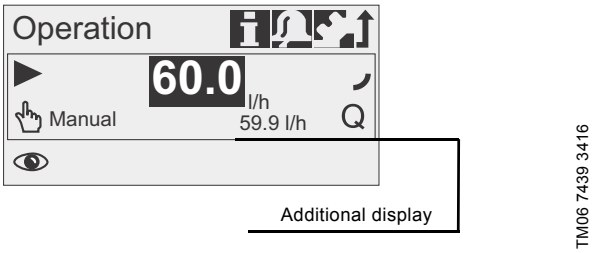

Fig. 14 Additional display

The following additional information can be selected:

Settings		Description
Default display		Depending on the operating mode:
	Q	Actual flow rate (manual, pulse)[1]
	Q	Target flow rate (pulse)
		Input current (analog)
		Remaining batch volume (batch, timer)
	t	Time until next batch (timer)
Dosed volume	V	Total dosed volume (Counters, see page 12)
Actual flow rate	Q	Actually measured flow rate [1]
Back pressure	P	Current back pressure in the dosing head[1]

[1] Only DDA-FCM control variant

Diaphragm leakage detection (DLD)

Applies to DDA-AR control variant

Pumps with diaphragm leakage detection (DLD) have a special dosing head with a special diaphragm and a pressure switch. The pressure switch is fitted and connected to the pump on delivery.

For pumps with diaphragm leakage detection, the pressure differential between inlet and outlet side must be at least 29 psi/2 bar.

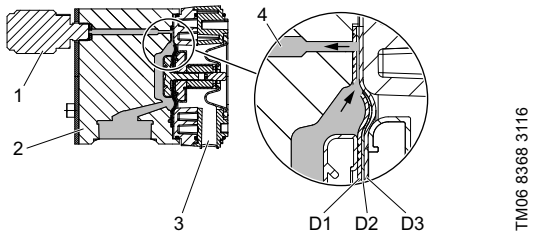

Fig. 15 Diaphragm leakage detection

Pos.	Components
1	Pressure switch
2	Dosing head
3	Drain opening
4	Dosing medium
D1	Working diaphragm
D2	Signal diaphragm (intermediate layer)
D3	Protective diaphragm

In case of a leak in the working diaphragm:

- Dosing medium (4) penetrates between working diaphragm (D1) and protective diaphragm (D3) and is transferred to the pressure switch (1) through the signal diaphragm (D2).
- On the next discharge stroke, the increasing pressure activates the pressure switch (1).
- The pump indicates an alarm and stops.

The pump provides two relay outputs, which can be used to trigger an external alarm, for example.

FlowControl

Applies to DDA-FCM control variant

Fig. 16 DDA with FlowControl

The pump monitors the liquid dosing process when the FlowControl function is activated. Although the pump is still operating, some influences such as air bubbles may cause reduced flow rates or even stop the dosing process.

For optimal process safety and reliability, the activated FlowControl function immediately detects and displays the following malfunctions:

- overpressure
- outlet line burst
- air bubbles in the dosing head
- cavitation at the inlet side
- inlet valve leakage
- outlet valve leakage.

The unique FlowControl is based on an intelligent and maintenance-free sensor integrated in the dosing head. During the dosing process, the sensor measures the actual pressure and sends the measured value to the microprocessor in the pump. An internal indicator diagram is generated combining the actual pressure value with the diaphragm position (stroke length). With it, the dosing process is monitored, as the different malfunctions can immediately be detected due to their specific deviations in the curve. Compressible air bubbles, for instance, will reduce the discharge phase and the stroke volume (see fig. 17).

The sensitivity and the delay of the FlowControl function can be adjusted individually.

FlowControl requires a minimum back pressure of 29 psi (2 bar). For discharge quantities < 0.26 gph (1 l/h), we recommend that you use a pressure valve (PV, see page 37) on the outlet side.

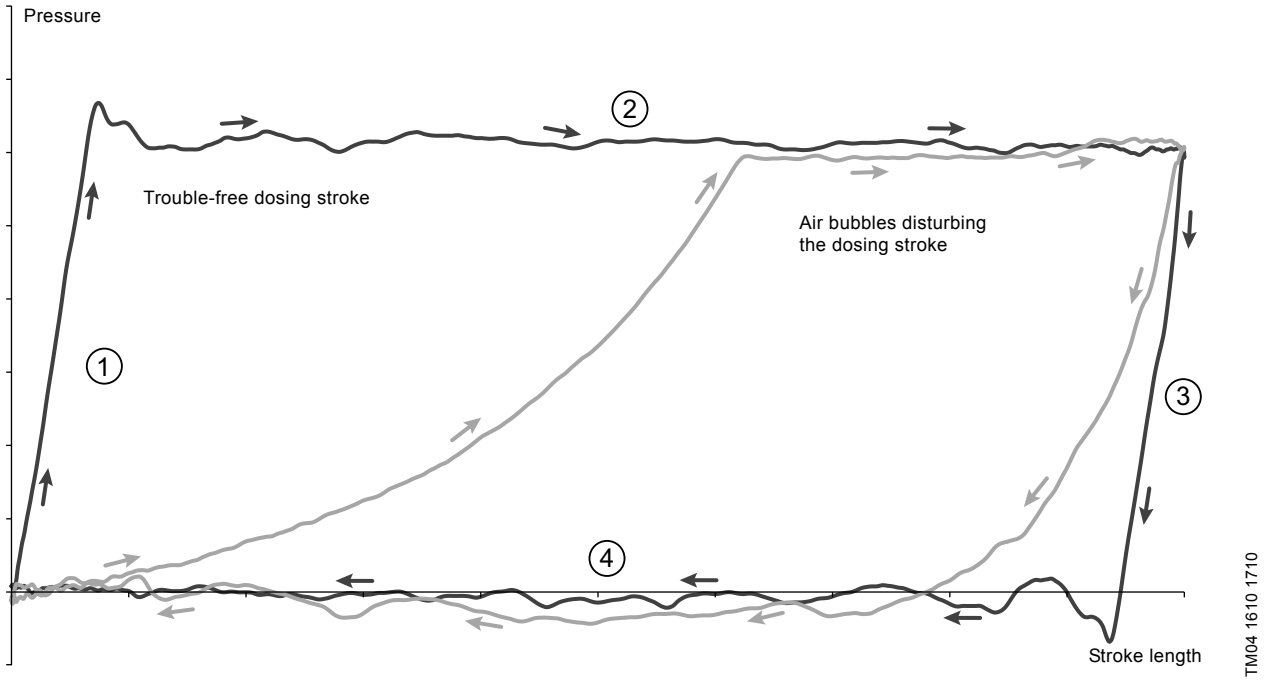

Fig. 17 Indicator diagram

Pos.	Description
1	Compression phase
2	Discharge phase
3	Expansion phase
4	Suction phase

Pressure monitoring

Applies to DDA-FCM control variant

The integrated pressure sensor measures the actual pressure of the system, which is shown in the display. A maximum pressure can be set. If the pressure in the system exceeds the set maximum (forexample caused by a closed valve), the pressure monitoring function stops the dosing process immediately. As soon as the back pressure falls below the set maximum, the dosing process is continued. In case the pressure drops below the minimum limit (for example caused by a burst outlet line), the pump stops and major chemical spills are prevented.

Pressure setting range

Pump type	Fixed min. pressure [psi (bar)]*	Adjustable max. pressure [psi (bar)]**
DDA 60-10	< 29 (< 2)	44 (3) ... 159 (11) (default)
DDA 120-7	< 29 (< 2)	44 (3) ... 116 (8) (default)
DDA 200-4	< 29 (< 2)	44 (3) ... 73 (5) (default)

* Can be set either as a warning (pump keeps running) or as an alarm (pump stops).

** The adjustable maximum pressure is equivalent to the maximum operating pressure plus 14.5 psi (1 bar).

Flow rate measurement

Applies to DDA-FCM control variant

The pump can precisely measure and display the actual dosing flow rate. Via the analog 0/4-20 mA output, the actual flow rate signal can easily be integrated into any process control system, without the need for any additional measurement equipment.

The flow rate measurement function is based on an indicator diagram as described in FlowControl (page 15). Accumulating the length of each discharge stroke phase and multiplying it with the stroke frequency results in the displayed actual flow rate. Any malfunctions, such as air bubbles or lower back pressure, will result in a reduced or increased actual flow rate. When the AutoFlowAdapt function (page 17) is activated, the pump compensates these influences by correcting the stroke speed.

AutoFlowAdapt

Applies to DDA-FCM control variant

When activating the AutoFlowAdapt function, even environmental changes will be compensated, so that the required target flow rate will be achieved. The integrated AutoFlowAdapt makes additional monitoring and control devices redundant. The AutoFlowAdapt function is based on:

- FlowControl: Malfunctions are detected.
- Pressure monitoring: System pressure changes are detected.
- Flow rate measurement: Deviations in the target flow rate are detected.

Examples:

- FlowControl detects air bubbles in the system. Due to a special motor drive strategy and a certain speed increase, the pump will try to keep the flow rate constant. This is especially important when dosing off-gassing liquids.
- In general, increasing system pressure reduces the stroke volume whereas falling system pressure increases the stroke volume. The AutoFlowAdapt function compensates this by automatically and continuously adapting the motor speed. Despite fluctuating system pressure, dosing accuracy is maintained.

Wiring diagram, DDA

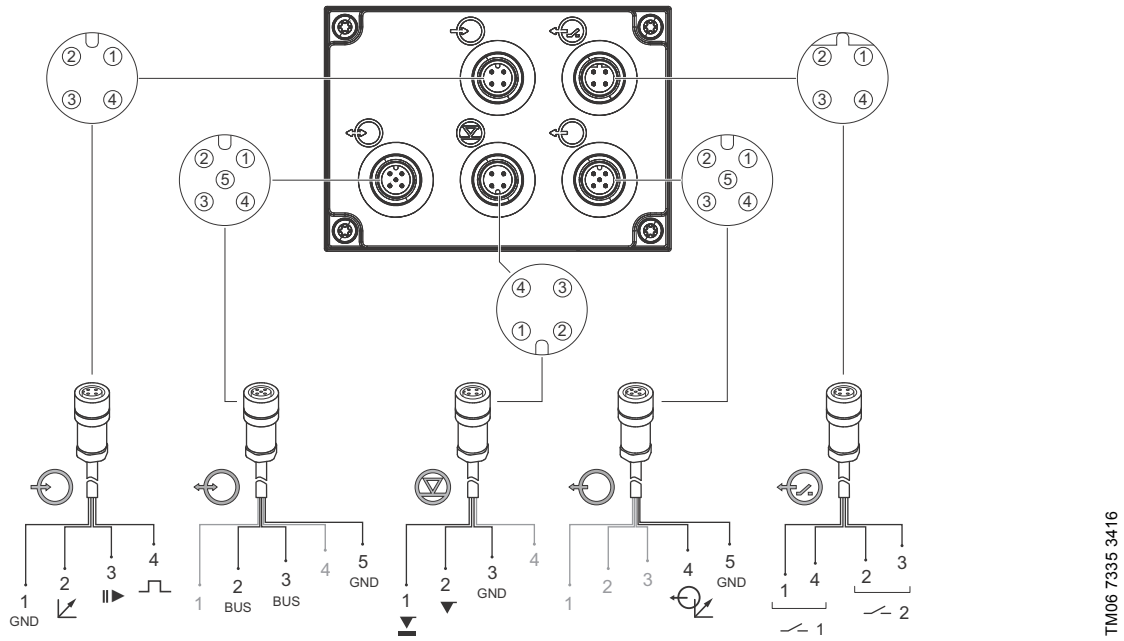

Symbol	Function	Pin assignment					Product number 6.56 ft (2 m) cable	9.84 ft (3 m) cable	16.40 ft (5 m) cable
		1/brown	2/white	3/blue	4/black		96609014		96609016
	Analog	GND/(-) mA	(+) mA						
	External stop	GND		X					
	Pulse	GND			X				
		1	2	3	4		See page 30, suction lances		
	Low-level signal	X		GND					
	Empty signal		X	GND					
		1/brown	2/white	3/blue	4/black	5/yellow/ green	96632921		96632922
	Analog output				(+) mA	GND/(-) mA			
			2/brown	3/blue		5/black	98589048		
	GENIbus		RS-485 A	RS-485 B		GND			
		1/brown	2/white	3/blue	4/black		96609017		96609019
	Relay 1	X			X				
	Relay 2		X	X					

FlowControl signal connection

Applies to DDA-FCM control variant

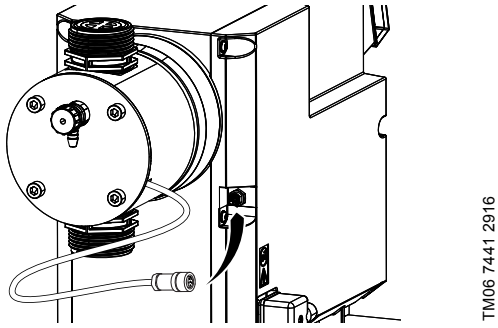

Fig. 18 FlowControl signal connection

DLD signal connection

Applies to DDA-AR control variant

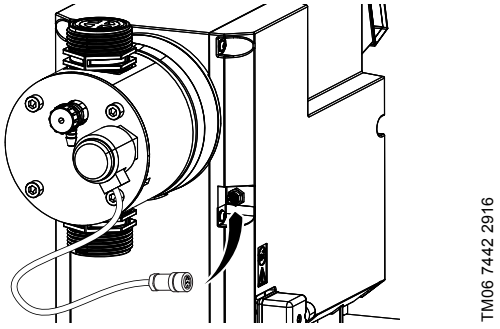

Fig. 19 DLD signal connection

5. Functions DDE

Operating elements DDE

The pump is supplied with a front-mounted control cube. The position of the control cube can easily be changed by unfastening two screws, lifting the cube, turning it to the left or to the right and fastening both screws again.

TM06 7309 0417

Fig. 20 Two of three possible control cube positions

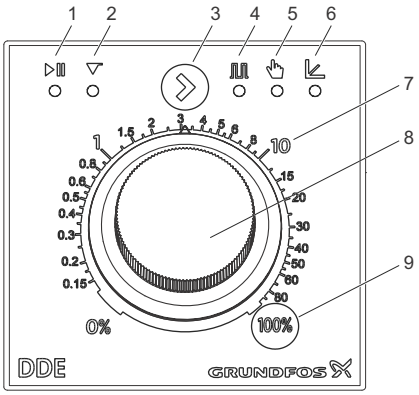

TM06 7320 3316

Fig. 21 Operating elements DDE

Pos.	Description	Control variant	
		B	AR
	Status LEDs:		
1	Motor blockage (red)	●	●
	External stop (red)		●
2	Tank level (yellow)		●
3	[Operating mode] key		●
	Operating mode LEDs (green):		
4	Pulse		●
5	Manual	●	●
6	Analog		●
7	Logarithmic scale	●	●
8	Capacity-adjusting knob	●	●
9	[100%] key		●

With the capacity adjusting knob, the capacity of the pump can easily be adjusted in % of the maximum flow rate. Due to the logarithmic increase of the percent values, even small dosing capacities can be set accurately.

LEDs (DDE-B)

The LEDs indicate the following operating statuses and faults:

LED status		Pump status	Description
▷II	☝		
	●	running	
	❍	standby	Capacity adjusted to 0 %
❍		stop	Motor blocked or overheated

● = LED on
❍ = LED flashing
Empty table cell = LED off

Keys and LEDs (DDE-AR)

When pressing and holding down the [100%] key, the pump doses at 100 % for a certain time. The [100%] key can be used for example for deaeration.

The [Operating mode] key is used to change the operating mode.

The operating mode LEDs indicate the active operating mode. Only one operating mode can be active at a time. Together with the status LEDs, the operating mode LEDs indicate the following statuses and faults:

LED status					Pump status	Description
▷II	▽	⊥	☝	⊾		
			●		running	
			❍		standby	Capacity adjusted to 0 %
		●			running	
		❍			standby	No incoming pulses
				●	running	
				❍	standby	Analog signal < 4.1 mA
	❍	●			running	Low level in tank
	●	❍			stop	Tank empty
●		❍			standby	External stop activated
❍					stop	Motor blocked or overheated

● = LED on
❍ = LED flashing
Empty table cell = LED off

Operating modes DDE

Manual control

In this operating mode, the pump doses constantly according to the dosing quantity set by the adjusting knob.

The setting range depends on the pump type:

Setting range

Pump type	Setting range	
	From [gph (l/h)]	To [gph (l/h)]
DDE 60-10	0.019 (0.075)	16 (60)
DDE 120-7	0.039 (0.15)	32 (120)
DDE 200-4	0.066 (0.25)	53 (200)

Pulse control

Applies to DDE-AR control variant

In this operating mode, the pump doses the set dosing volume for each incoming (potential-free) pulse, for example from a water meter. The pump automatically calculates the optimum stroke frequency for dosing the set volume per pulse.

The calculation is based on:

- the frequency of external pulses
- the set stroke volume in percent.

The dosing quantity per pulse is set to a value between 0.125 % and 100 % of the stroke volume using the adjusting knob.

Setting range

Pump type	Setting range [ml/pulse]
DDE 60-10	0.0070-5.56
DDE 120-7	0.0145-11.58
DDE 200-4	0.0242-19.3

The frequency of incoming pulses is multiplied by the set dosing volume. If the pump receives more pulses than it can process at the maximum dosing flow rate, it runs at the maximum stroke frequency in continuous operation. Excess pulses will be ignored.

Analog 4-20 mA control

Applies to DDE-AR control variant

In this operating mode, the pump doses according to the external analog signal. The dosing volume is proportional to the signal input value in mA. The input signal must be 4-20 mA.

The maximum dosing volume can be changed via the capacity adjusting knob.

Example:

Set capacity [%]	Input signal [mA]	Dosing flow [%]
100	≤ 4.1	0
	≥ 19.8	100
50	≤ 4.1	0
	≥ 19.8	50
1	≤ 4.1	0
	≥ 19.8	1

Functions DDE

External stop

Applies to DDE-AR control variant

With the external stop function, the pump can be stopped remotely via an external contact. We do not recommend that you switch the power supply on and off as was the usual procedure with conventional dosing pumps. When working with microprocessor-controlled digital dosing pumps, the external stop signal has to be used, in order to keep the optimal dosing precision and to prevent damages to the electronics.

When activating the external stop signal, the pump changes from running ▶ to standby ❚❚. The signal input can be set to normally open (default) or normally closed contact.

An activated external stop is indicated by the respective LED. See *Keys and LEDs (DDE-AR)* on page 19.

Level control

Applies to DDE-AR control variant

The pump can be connected to a dual level control unit for monitoring of the chemical level in the tank. The pump can react to two level signals:

Level sensors	Pump reaction*
Low-level signal	• ▽ LED flashes • Pump continues to run
Empty-tank signal	• ▽ LED on • Pump stops

* Depending on the pump model and settings, the relay outputs can be activated (see *Relay output*, page 21).

Relay output

Applies to DDE-AR control variant

The pump can switch between two external signals using installed relays. The relay outputs are potential-free.

Depending on the process control requirements, the following relay output settings can be chosen:

Signal		Description
Relay 1	**Relay 2**	
Alarm*		Empty tank, motor blocked
	Low level*	Low level in tank
	Stroke signal	Every completed stroke
	Pulse input	Every pulse coming in from pulse input
Contact type		
NO*	NO*	Normally Open Contact
NC	NC	Normally Closed Contact

* default setting

Wiring diagram, DDE

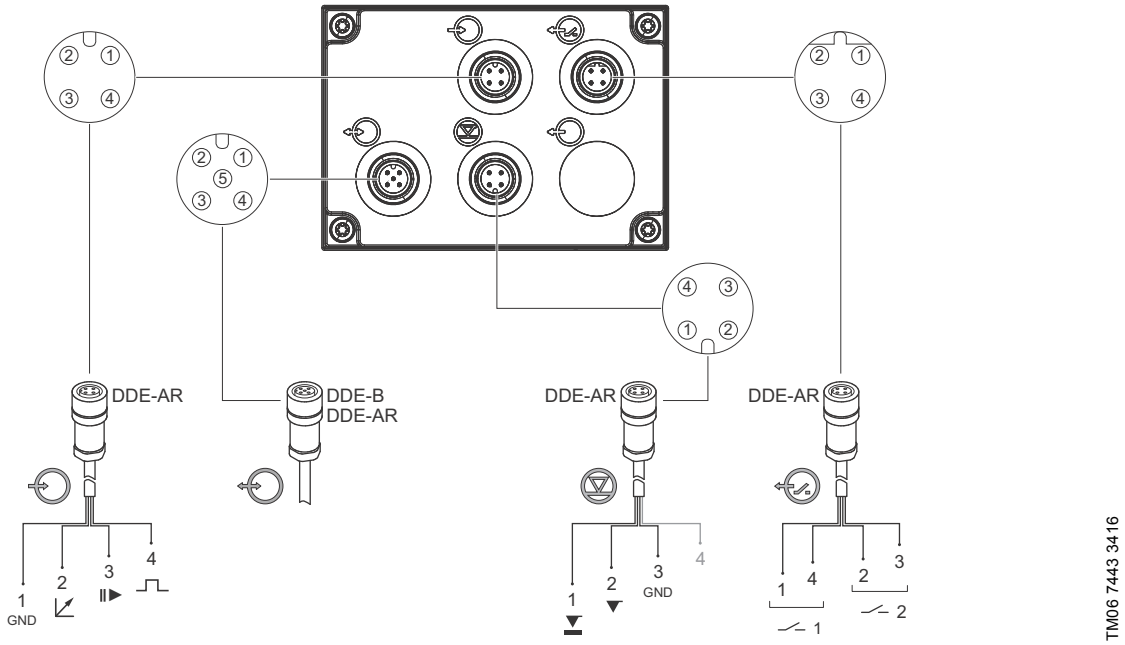

Symbol	Function	Pin assignment				Product number	
						6.56 ft (2 m) cable	16.40 ft (5 m) cable
		1/brown	2/white	3/blue	4/black		
	Analog	GND/(-) mA	(+) mA			96609014	96609016
	External stop	GND		X			
	Pulse	GND			X		
		1	2	3	4		
	Low-level signal	X		GND		See page 30, suction lances	
	Empty signal		X	GND			
	Service connection (only for Grundfos service)						
		1/brown	2/white	3/blue	4/black		
	Relay 1	X			X	96609017	96609019
	Relay 2		X	X			

6. Construction

DDA

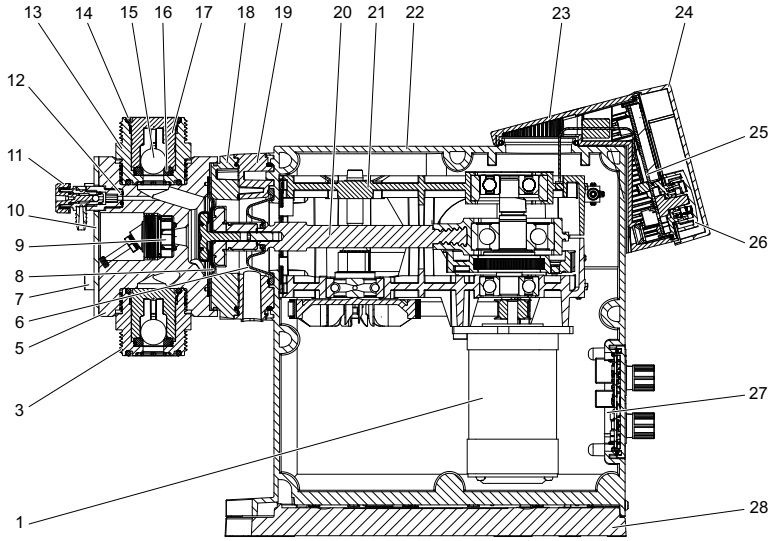

Fig. 22 Sectional drawing, DDA 60-10

Construction

The DDA pumps are motor-driven diaphragm dosing pumps consisting of the following main parts:

Dosing head: Patented design with a minimum of clearance space optimized for off-gassing liquids. With integrated deaeration valve for priming and venting complete with connection for DN 20 tubing. DDA-FCM pumps have an integrated pressure sensor in the dosing head.

Valves: Outlet and inlet valve design for less clearance space - optimized for off-gassing liquids. Spring-loaded valves for higher viscosities are available as an option.

Connections: Robust and easy-to-use connection packages for various sizes of hoses or pipes.

Diaphragm: Double full-PTFE diaphragm designed for long life and universal chemical resistance.

Flange: With separation chamber, safety diaphragm and drain hole.

Drive unit: Positive return crank with double-stage belt drive, energy recovery spring for high efficiency (only 120-7 and 200-4 pump versions), PMS motor, all mounted in a robust gear housing.

Control cube: Containing operation electronics with display, keys, click-wheel and protective cover.

Housing: Containing drive unit and power electronics with robust signal sockets. The housing can be installed on the mounting plate with two screws.

Material specification

Pos.	Description	Material options
1	PMS motor	-
3	Inlet valve, complete*	-
5	Dosing head	PVC, PVDF, SS 1.4435
6	Safety diaphragm	EPDM
7	Dosing head screw	SS 1.4301
8	Diaphragm	Full PTFE
9	Pressure sensor	-
10	Dosing head cover	SS 1.4301
11	Deaeration valve	PVC, PVDF
12	Deaeration valve O-ring	EPDM/FKM
13	Outlet valve, complete*	-
14	Outlet valve O-ring	EPDM, FKM, PTFE
15	Outlet valve ball, DN 20	Ceramic Al_2O_3 99.5 %, SS 1.4401
16	Outlet valve seat	EPDM, FKM, PTFE
17	Outlet valve housing and ball cage	PP, PVC, PVDF, SS 1.4435
18	Intermediate ring	PPO/PS 20 % gf
19	Pump head flange	Aluminium alloy 3.1645
20	Connecting rod	1.4401
21	Gear box	PPE/PA 30 % gf
22	Housing	PPE/PS 20 % gf
23	Control cube	PPE/PS 20 % gf
24	Display cover	PC
25	HMI PCB	-
26	Click wheel	PPE/PS 20 % gf
27	Input/output PCB	-
28	Mounting plate	PPE/PS 20 % gf
-	Energy recovery spring	Spring steel EN 10270-1-SH

* Pump can be supplied with spring-loaded valves (Material: 2.4610 (Alloy C-4))

DDE

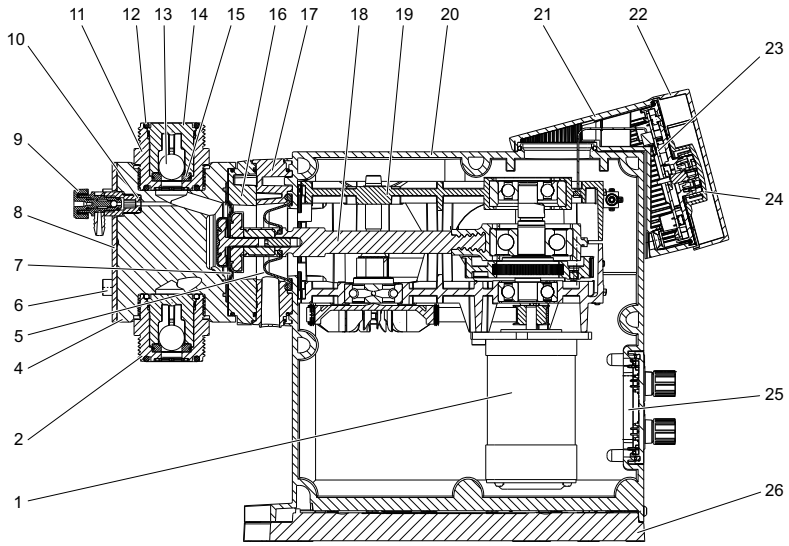

Fig. 23 Sectional drawing, DDE 60-10

Construction

The DDE pump is a motor-driven diaphragm dosing pump consisting of the following main parts:

Dosing head: Patented design with a minimum of clearance space optimized for off-gassing liquids. With integrated deaeration valve for priming and venting complete with connection for DN 20 tubing.

Valves: Outlet and inlet valve design for less clearance space - optimized for off-gassing liquids. Spring-loaded valves for higher viscosities are available as an option.

Connections: Robust and easy-to-use connection packages for various sizes of hoses or pipes.

Diaphragm: Double full-PTFE diaphragm designed for long life and universal chemical resistance.

Flange: With separation chamber, safety diaphragm and drain hole.

Drive unit: Positive return crank with double-stage belt drive, energy recovery spring for high efficiency (only 120-7 and 200-4 pump versions), PMS motor, all mounted in a robust gear housing.

Control cube: Containing keys, LEDs, capacity adjusting knob and protective cover.

Housing: Containing drive unit, control panel and electronics with robust signal sockets. The housing can be installed on the mounting plate with two screws.

Material specification

Pos.	Description	Material options
1	PMS motor	-
2	Inlet valve, complete*	-
4	Dosing head	PVC, PVDF, SS 1.4435
5	Safety diaphragm	EPDM
6	Dosing head screw	SS 1.4301
7	Diaphragm	Full PTFE
8	Dosing head cover	SS 1.4301
9	Deaeration valve	PVC, PVDF
10	Deaeration valve O-ring	EPDM/FKM
11	Outlet valve, complete*	-
12	Outlet valve O-ring	EPDM, FKM, PTFE
13	Outlet valve ball, DN 20	Ceramic Al_2O_3 99.5 %, SS 1.4401
14	Outlet valve housing and ball cage	PP, PVC, PVDF, SS 1.4435
15	Outlet valve seat	EPDM, FKM, PTFE
16	Intermediate ring	PPO/PS 20 % gf
17	Pump head flange	Aluminium alloy 3.1645
18	Connecting rod	1.4401
19	Gear box	PPE/PA 30 % gf
20	Housing	PPE/PS 20 % gf
21	Control cube	PPE/PS 20 % gf
22	Display cover	PC
23	HMI PCB	-
24	Capacity adjusting knob	PPE/PS 20 % gf
25	Input/output PCB	-
26	Mounting plate	PPE/PS 20 % gf
-	Energy recovery spring	Spring steel EN 10270-1-SH

* Pump can be supplied with spring-loaded valves (Material: 2.4610 (Alloy C-4))

7. Dimensions

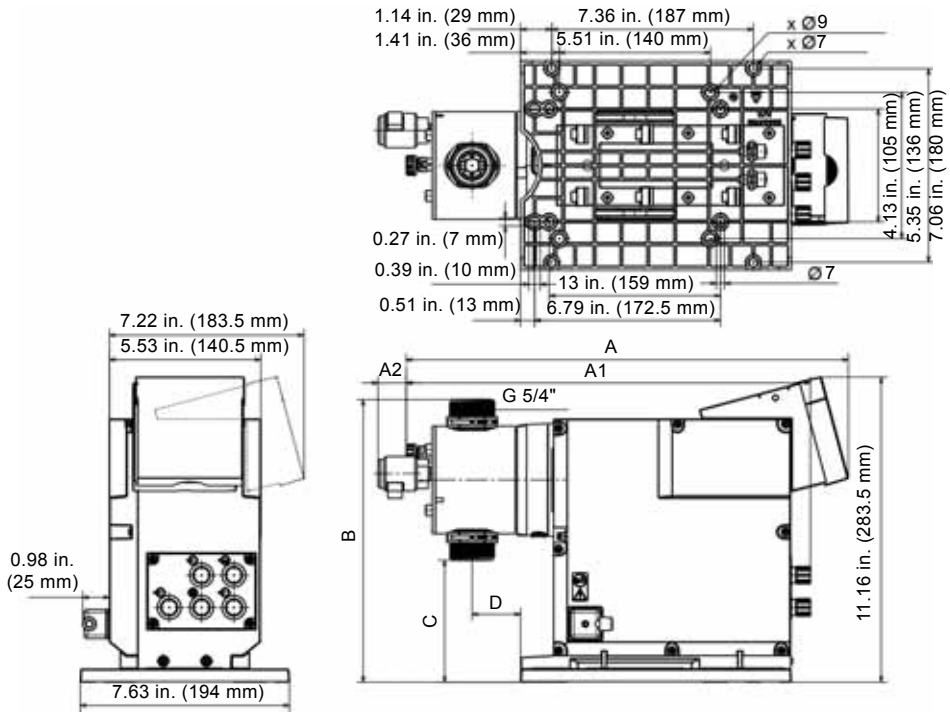

Fig. 24 DDA and DDE with front-fitted or side-fitted control cube

Pump type	Pump head material	A [in. (mm)]	A1 [in. (mm)]	A2* [in. (mm)]	B [in. (mm)]	C [in. (mm)]	D [in. (mm)]
DDA 60-10 DDE 60-10	PVC/PV	16.14 (410)	14.72 (374)	1.02 (26)	10,35 (263)	4.40 (112)	1.77 (45)
	SS	15.94 (405)	14.33 (364)	-	10,35 (263)	4.40 (112)	1.77 (45)
DDA 120-7 DDE 120-7	PVC/PV	16.14 (410)	14.72 (374)	1.02 (26)	10.88 (276.5)	3.81 (97)	1.77 (45)
	SS	15.94 (405)	14.33 (364)	-	10.88 (276.5)	3.81 (97)	1.77 (45)
DDA 200-4 DDE 200-4	PVC/PV	16.14 (410)	14.72 (374)	1.02 (26)	11.31 (287.5)	3.46 (88)	1.77 (45)
	SS	15.94 (405)	14.33 (364)	-	11.31 (287.5)	3.46 (88)	1.77 (45)

* Dimension with optional diaphragm leakage detection. Only available for DDA-AR control variant.

8. Technical data

DDA

Data			60-10	120-7	200-4
Mechanical data	Turn-down ratio (setting range)	[1:X]	800	800	800
	Max. dosing capacity	[l/h]	60	120	200
		[gph]	15.8	32	52.8
	Max. dosing capacity with SlowMode 50 %	[l/h]	30	60	100
		[gph]	7.9	16	26.4
	Max. dosing capacity with SlowMode 25 %	[l/h]	15	30	50
		[gph]	3.95	8	13.2
	Min. dosing capacity	[l/h]	0.075	0.15	0.25
		[gph]	0.0197	0.04	0.066
	Max. operating pressure (back pressure)	[bar]	10	7	4
		[psi]	145	101	58
	Max. stroke frequency[1)]	[strokes/min]	196	188	188
	Stroke volume	[ml]	5.56	11.58	19.3
	Accuracy of repeatability[5)]	[%]	1.5 SP + 0.1 FS[5)]		
	Max. suction lift during operation[2)]	[ft (m)]	9.84 (3)		
	Max. suction lift when priming with wet valves[2)]	[ft (m)]	4.92 (1.5)		
	Min. pressure difference between inlet and outlet side	[bar]	1[6)]		
		[psi]	14.5[6)]		
	Max. inlet pressure, inlet side	[bar]	2		
		[psi]	29		
	Max. viscosity in SlowMode 25 % with spring-loaded valves[3)]	[mPas] (= cP)	3000	3000	2000
	Max. viscosity in SlowMode 50 % with spring-loaded valves[3)]	[mPas] (= cP)	2000	1500	1000
	Max. viscosity without SlowMode with spring-loaded valves[3)]	[mPas] (= cP)	1000	1000	500
	Max. viscosity without spring-loaded valves[3)]	[mPas] (= cP)	100		
	Min. internal hose/pipe diameter inlet/outlet side[2), 4)]	[in. (mm)]	0.748 (19)		
	Min. internal hose/pipe diameter inlet/outlet side (high viscosity)[4)]	[in. (mm)]	0.748 (19)		
	Min./max. liquid temperature (PVDF, SS)	[°F (°C)]	32/122 (0/50)		
	Min./max. liquid temperature (PVC)	[°F (°C)]	32/104 (0/40)		
	Min./max. ambient temperature	[°F (°C)]	32/113 (0/45)		
	Min./max. storage temperature (PVDF, SS)	[°F (°C)]	-4/158 (-20/70)		
	Min./max. storage temperature (PVC)	[°F (°C)]	-4/113 (-20/45)		
	Max. relative humidity (non-condensing)	[%]	90		
	Max. altitude above sea level	[ft (m)]	6562 (2000)		
Electrical data	Voltage	[V]	100-240 V ± 10 %, 50/60 Hz		
	Length of mains cable	[ft (m)]	4.92 (1.5)		
	Max. inrush current for 2 ms (100 V)	[A]	35		
	Max. inrush current for 2 ms (240 V)	[A]	70		
	Max. power consumption P_1	[W]	62		
	Enclosure class		IP65, Nema 4X		
	Electrical safety class		I		
	Pollution degree		2		

Data			60-10	120-7	200-4
Signal input	Max. load for level input, pulse input and External stop input		12 V, 5 mA		
	Min. pulse length	[ms]	5		
	Max. pulse frequency	[Hz]	100		
	Impedance at 0/4-20 mA analog input	[Ω]	15		
	Accuracy of analog input (full-scale value)	[%]	± 0.5		
	Min. resolution of analog input	[mA]	0.02		
	Max. loop resistance in external circuit	[Ω]	150		
Signal output	Max. resistive load on relay output	[A]	0.5		
	Max. voltage on relay/analog output	[V]	30 VDC / 30 VAC		
	Max. loop resistance in external circuit of the 0/4-20 mA analog output	[Ω]	500		
	Accuracy of analog output (full-scale value)	[%]	± 0.5		
	Min. resolution of analog output	[mA]	0.02		
Weight/size	Weight (PVC, PVDF)	[lb (kg)]	14.8 (6.7)	17.5 (7.9)	19.7 (8.9)
	Weight (stainless steel)	[lb (kg)]	15.9 (7.2)	15.9 (8.3)	20.1 (9.1)
	Diaphragm diameter	[in. (mm)]	2.91 (74)	3.82 (97)	4.61 (117)
Sound pressure	Max. sound pressure level	[dB(A)]	80		
Approvals			CE, CSA-US, NSF61, EAC, ACS, RCM		

1) The maximum stroke frequency varies depending on calibration
2) Data is based on measurements with water
3) Maximum suction lift: 3.28 ft (1 m), dosing capacity reduced (approx. 30 %)
4) Length of inlet line: 4.92 ft (1.5 m), length of outlet line: 32.8 ft (10 m) (at maximum viscosity)
5) FS = full-scale (maximum actual dosing flow rate), SP = setpoint
6) For FCM control variant and for pumps with diaphragm leakage detection, the pressure difference must be at least 29 psi (2 bar) .

DDE

Data			60-10	120-7	200-4
Mechanical data	Turn-down ratio (setting range)	[1:X]	800	800	800
	Max. dosing capacity	[l/h]	60	120	200
		[gph]	15.8	32	52.8
	Min. dosing capacity	[l/h]	0.075	0.15	0.25
		[gph]	0.0197	0.04	0.066
	Max. operating pressure	[bar]	10	7	4
		[psi]	145	101	58
	Max. stroke frequency	[strokes/min]	196	188	188
	Stroke volume	[ml]	5.56	11.58	19.3
	Accuracy of repeatability[4)]	[%]	5 SP + 0.1 FS		
	Max. suction lift during operation[1)]	ft [m]	9.84 (3)		
	Max. suction lift when priming with wet valves[1)]	ft [m]	4.92 (1.5)		
	Min. pressure difference between inlet and outlet side	[bar]	1		
		[psi]	14.5		
	Max. inlet pressure, inlet side	[bar]	2		
		[psi]	29		
	Max. viscosity with spring-loaded valves[2)]	[mPas] (= cP)	1000	1000	500
	Max. viscosity without spring-loaded valves[2)]	[mPas] (= cP)	100		
	Min. internal hose/pipe diameter inlet/outlet side[1), 3)]	[in. (mm)]	0.748 (19)		
	Min. internal hose/pipe diameter inlet/outlet side (high viscosity)[3)]	[in. (mm)]	0.748 (19)		
	Min./max. liquid temperature (PVDF, SS)	[°F (°C)]	32/122 (0/50)		
	Min./max. liquid temperature (PVC)	[°F (°C)]	32/104 [0/40]		
	Min./max. ambient temperature	[°F (°C)]	32/113 (0/45)		
	Min./max. storage temperature (PVDF, SS)	[°F (°C)]	-4/158 (-20/70)		
	Min./max. storage temperature (PVC)	[°F (°C)]	-4/113 (-20/45)		
	Max. relative humidity (non-condensing)	[%]	90		
	Max. altitude above sea level	ft [m]	6562 (2000)		
Electrical data	Voltage	[V]	100-240 V ± 10 %, 50/60 Hz		
	Length of mains cable	ft [m]	4.92 (1.5)		
	Max. inrush current for 2 ms (100 V)	[A]	35		
	Max. inrush current for 2 ms (240 V)	[A]	70		
	Max. power consumption P_1	[W]	62		
	Enclosure class		IP65, Nema 4X		
	Electrical safety class		I		
	Pollution degree		2		
Signal input	Max. load for level input, pulse input and external stop input		12 V, 5 mA		
	Min. pulse length	[ms]	5		
	Max. pulse frequency	[Hz]	100		
	Max. loop resistance in external circuit	[Ω]	150		
	Impedance at 4-20 mA analog input	[Ω]	15		
	Accuracy of analog input (full-scale value)	[%]	± 0.5		
	Min. resolution of analog input	[mA]	0.02		
Signal output	Max. resistive load on relay output	[A]	0.5		
	Max. voltage on relay output	[V]	30 VDC / 30 VAC		
Weight/size	Weight (PVC, PVDF)	[kg]	14.8 (6.7)	17.5 (7.9)	19.7 (8.9)
	Weight (stainless steel)	[kg]	15.9 (7.2)	15.9 (8.3)	20.1 (9.1)
	Diaphragm diameter	in. [mm]	2.91 (74)	3.82 (97)	4.61 (117)
Sound pressure	Max. sound pressure level	[dB(A)]	80		
Approvals			CE, CSA-US, NSF61, EAC, ACS, RCM		

1) Data is based on measurements with water
2) Maximum suction lift: 3.28 ft (1 m), dosing capacity reduced (approx. 30 %)
3) Length of inlet line: 4.92 ft (1.5 m), length of outlet line: 32.8 ft (10 m) (at maximum viscosity)
4) FS = full-scale, SP = setpoint

9. Pump selection

General recommendations for installation

- Installing a filter in the inlet line protects the entire installation against dirt and reduces the risk of leakage.
- A pressure relief valve (PRV, see page 35) must be installed in the outlet line to provide protection against impermissibly high pressure.
- For pipe installations and for hose installations where the pump is operated at ≥ 75 % of its dosing capacity, a pulsation damper (DB/DBG, see page 38) should be installed downstream the pump.
- Only for control variant DDA-FCM: For discharge quantities < 1 l/h, we recommend that you usea pressure valve (PV, see page 37) on the outlet side for the safe generation of the necessary differential pressure of 29 psi (2 bar).

DDA, standard range

Supply voltage: 100-240 V, 50/60 Hz single phase
Mains plug: EU USA, Canada
Valves: Standard
Connection sets: 2x union nut G 5/4", 3/4" MNPT
2x union nut G 5/4" (SS), 3/4" FNPT (SS)

Max. dosing capacity [gph (l/h)]	Max. operating pressure [psi (bar)]	Control variant	Materials			Type designation	Product number
			Pump head	Gaskets	Valve balls		
15.85 (60)	145 (10)	AR	PVC	EPDM	Ceramic	DDA 60-10 AR-PVC/E/C-F-31A7A7BG	99159454
				FKM	Ceramic	DDA 60-10 AR-PVC/V/C-F-31A7A7BG	99159455
			PVDF	EPDM	Ceramic	DDA 60-10 AR-PV/E/C-F-31A7A7BG	99159456
				PTFE	Ceramic	DDA 60-10 AR-PV/T/C-F-31A7A7BG	99159457
				FKM	Ceramic	DDA 60-10 AR-PV/V/C-F-31A7A7BG	99159458
			SS	FKM	SS	DDA 60-10 AR-SS/V/SS-F-31A3A3BG	99159459
				PTFE	SS	DDA 60-10 AR-SS/T/SS-F-31A3A3BG	99159460
15.85 (60)	145 (10)	FCM	PVC	EPDM	Ceramic	DDA 60-10 FCM-PVC/E/C-F-31A7A7BG	99159461
				FKM	Ceramic	DDA 60-10 FCM-PVC/V/C-F-31A7A7BG	99159462
			PVDF	EPDM	Ceramic	DDA 60-10 FCM-PV/E/C-F-31A7A7BG	99159463
				PTFE	Ceramic	DDA 60-10 FCM-PV/T/C-F-31A7A7BG	99159464
				FKM	Ceramic	DDA 60-10 FCM-PV/V/C-F-31A7A7BG	99159465
			SS	FKM	SS	DDA 60-10 FCM-SS/V/SS-F-31A3A3BG	99159466
				PTFE	SS	DDA 60-10 FCM-SS/T/SS-F-31A3A3BG	99159467
31.70 (120)	101.5 (7)	AR	PVC	EPDM	Ceramic	DDA 120-7 AR-PVC/E/C-F-31A7A7BG	99159468
				FKM	Ceramic	DDA 120-7 AR-PVC/V/C-F-31A7A7BG	99159469
			PVDF	EPDM	Ceramic	DDA 120-7 AR-PV/E/C-F-31A7A7BG	99159470
				PTFE	Ceramic	DDA 120-7 AR-PV/T/C-F-31A7A7BG	99159471
				FKM	Ceramic	DDA 120-7 AR-PV/V/C-F-31A7A7BG	99159472
			SS	FKM	SS	DDA 120-7 AR-SS/V/SS-F-31A3A3BG	99159473
				PTFE	SS	DDA 120-7 AR-SS/T/SS-F-31A3A3BG	99159474
31.70 (120)	101.5 (7)	FCM	PVC	EPDM	Ceramic	DDA 120-7 FCM-PVC/E/C-F-31A7A7BG	99159475
				FKM	Ceramic	DDA 120-7 FCM-PVC/V/C-F-31A7A7BG	99159476
			PVDF	EPDM	Ceramic	DDA 120-7 FCM-PV/E/C-F-31A7A7BG	99159477
				PTFE	Ceramic	DDA 120-7 FCM-PV/T/C-F-31A7A7BG	99159478
				FKM	Ceramic	DDA 120-7 FCM-PV/V/C-F-31A7A7BG	99159479
			SS	FKM	SS	DDA 120-7 FCM-SS/V/SS-F-31A3A3BG	99159480
				PTFE	SS	DDA 120-7 FCM-SS/T/SS-F-31A3A3BG	99159481
52.83 (200)	58 (4)	AR	PVC	EPDM	Ceramic	DDA 200-4 AR-PVC/E/C-F-31A7A7BG	99159482
				FKM	Ceramic	DDA 200-4 AR-PVC/V/C-F-31A7A7BG	99159483
			PVDF	EPDM	Ceramic	DDA 200-4 AR-PV/E/C-F-31A7A7BG	99159484
				PTFE	Ceramic	DDA 200-4 AR-PV/T/C-F-31A7A7BG	99159485
				FKM	Ceramic	DDA 200-4 AR-PV/V/C-F-31A7A7BG	99159486
			SS	FKM	SS	DDA 200-4 AR-SS/V/SS-F-31A3A3BG	99159487
				PTFE	SS	DDA 200-4 AR-SS/T/SS-F-31A3A3BG	99159488

Max. dosing capacity [gph (l/h)]	Max. operating pressure [psi (bar)]	Control variant	Materials			Type designation	Product number
			Pump head	Gaskets	Valve balls		
52.83 (200)	58 (4)	FCM	PVC	EPDM	Ceramic	DDA 200-4 FCM-PVC/E/C-F-31A7A7BG	99159489
				FKM	Ceramic	DDA 200-4 FCM-PVC/V/C-F-31A7A7BG	99159490
			PVDF	EPDM	Ceramic	DDA 200-4 FCM-PV/E/C-F-31A7A7BG	99159491
				PTFE	Ceramic	DDA 200-4 FCM-PV/T/C-F-31A7A7BG	99159492
				FKM	Ceramic	DDA 200-4 FCM-PV/V/C-F-31A7A7BG	99159493
			SS	FKM	SS	DDA 200-4 FCM-SS/V/SS-F-31A3A3BG	99159494
				PTFE	SS	DDA 200-4 FCM-SS/T/SS-F-31A3A3BG	99159495

DDE, standard range

Supply voltage: 100-240 V, 50/60 Hz single phase
Mains plug: USA, Canada
Valves: Standard
Connection sets: 2x union nut G 5/4", 3/4" MNPT
2x union nut G 5/4",3/4" FNPT (SS)

Max. dosing capacity [gph (l/h)]	Max. operating pressure [psi (bar)]	Control variant	Materials			Type designation	Product number
			Pump head	Gaskets	Valve balls		
15.85 (60)	145 (10)	B	PVC	EPDM	Ceramic	DDE 60-10 B-PVC/E/C-F-31A7A7BG	99159412
				FKM	Ceramic	DDE 60-10 B-PVC/V/C-F-31A7A7BG	99159413
			PVDF	EPDM	Ceramic	DDE 60-10 B-PV/E/C-F-31A7A7BG	99159414
				PTFE	Ceramic	DDE 60-10 B-PV/T/C-F-31A7A7BG	99159415
				FKM	Ceramic	DDE 60-10 B-PV/V/C-F-31A7A7BG	99159416
			SS	FKM	SS	DDE 60-10 B-SS/V/SS-F-31A3A3BG	99159417
				PTFE	SS	DDE 60-10 B-SS/T/SS-F-31A3A3BG	99159418
15.85 (60)	145 (10)	AR	PVC	EPDM	Ceramic	DDE 60-10 AR-PVC/E/C-F-31A7A7BG	99159419
				FKM	Ceramic	DDE 60-10 AR-PVC/V/C-F-31A7A7BG	99159420
			PVDF	EPDM	Ceramic	DDE 60-10 AR-PV/E/C-F-31A7A7BG	99159421
				PTFE	Ceramic	DDE 60-10 AR-PV/T/C-F-31A7A7BG	99159422
				FKM	Ceramic	DDE 60-10 AR-PV/V/C-F-31A7A7BG	99159423
			SS	FKM	SS	DDE 60-10 AR-SS/V/SS-F-31A3A3BG	99159424
				PTFE	SS	DDE 60-10 AR-SS/T/SS-F-31A3A3BG	99159425
31.70 (120)	101.5 (7)	B	PVC	EPDM	Ceramic	DDE 120-7 B-PVC/E/C-F-31A7A7BG	99159426
				FKM	Ceramic	DDE 120-7 B-PVC/V/C-F-31A7A7BG	99159427
			PVDF	EPDM	Ceramic	DDE 120-7 B-PV/E/C-F-31A7A7BG	99159428
				PTFE	Ceramic	DDE 120-7 B-PV/T/C-F-31A7A7BG	99159429
				FKM	Ceramic	DDE 120-7 B-PV/V/C-F-31A7A7BG	99159430
			SS	FKM	SS	DDE 120-7 B-SS/V/SS-F-31A3A3BG	99159431
				PTFE	SS	DDE 120-7 B-SS/T/SS-F-31A3A3BG	99159432
31.70 (120)	101.5 (7)	AR	PVC	EPDM	Ceramic	DDE 120-7 AR-PVC/E/C-F-31A7A7BG	99159433
				FKM	Ceramic	DDE 120-7 AR-PVC/V/C-F-31A7A7BG	99159434
			PVDF	EPDM	Ceramic	DDE 120-7 AR-PV/E/C-F-31A7A7BG	99159435
				PTFE	Ceramic	DDE 120-7 AR-PV/T/C-F-31A7A7BG	99159436
				FKM	Ceramic	DDE 120-7 AR-PV/V/C-F-31A7A7BG	99159437
			SS	FKM	SS	DDE 120-7 AR-SS/V/SS-F-31A3A3BG	99159438
				PTFE	SS	DDE 120-7 AR-SS/T/SS-F-31A3A3BG	99159439
52.83 (200)	58 (4)	B	PVC	EPDM	Ceramic	DDE 200-4 B-PVC/E/C-F-31A7A7BG	99159440
				FKM	Ceramic	DDE 200-4 B-PVC/V/C-F-31A7A7BG	99159441
			PVDF	EPDM	Ceramic	DDE 200-4 B-PV/E/C-F-31A7A7BG	99159442
				PTFE	Ceramic	DDE 200-4 B-PV/T/C-F-31A7A7BG	99159443
				FKM	Ceramic	DDE 200-4 B-PV/V/C-F-31A7A7BG	99159444
			SS	FKM	SS	DDE 200-4 B-SS/V/SS-F-31A3A3BG	99159445
				PTFE	SS	DDE 200-4 B-SS/T/SS-F-31A3A3BG	99159446
52.83 (200)	58 (4)	AR	PVC	EPDM	Ceramic	DDE 200-4 AR-PVC/E/C-F-31A7A7BG	99159447
				FKM	Ceramic	DDE 200-4 AR-PVC/V/C-F-31A7A7BG	99159448
			PVDF	EPDM	Ceramic	DDE 200-4 AR-PV/E/C-F-31A7A7BG	99159449
				PTFE	Ceramic	DDE 200-4 AR-PV/T/C-F-31A7A7BG	99159450
				FKM	Ceramic	DDE 200-4 AR-PV/V/C-F-31A7A7BG	99159451
			SS	FKM	SS	DDE 200-4 AR-SS/V/SS-F-31A3A3BG	99159452
				PTFE	SS	DDE 200-4 AR-SS/T/SS-F-31A3A3BG	99159453

DDA, DDE, non-standard range

The codes used in the following tables are explained in the type key. See page 6.

DDA

Max. flow - press.	Control variant	DLD function	Materials			Control cube position	Supply voltage	Valve type	Connection inlet/outlet	Mains plug	Design	Special variant
			Head	Gaskets	Balls							
60-10 120-7 200-4	AR	NO	PVC PV	E V T	C	F	3	1 2	U3U3 A7A7	F B G I E J L	G	C3
			SS	E V T	SS	F	3	1 2	A1A1 A3A3			
		YES	PVC-L PV-L	E V T	C	F	3	1 2	U3U3 A7A7			
			SS-L	E V T	SS	F	3	1 2	A1A1 A3A3			
	FCM	NO	PVC PV	E V T	C	F	3	1 2	U3U3 A7A7			
			SS	E V T	SS	F	3	1 2	A1A1 A3A3			

DDE

Max. flow - press.	Control variant	DLD function	Materials			Control cube position	Supply voltage	Valve type	Connection inlet/outlet	Mains plug	Design	Special variant
			Head	Gaskets	Balls							
60-10 120-7 200-4	B AR	NO	PVC PV	E V T	C	F	3	1 2	U3U3 A7A7	F B G I E J L	G	C3
			SS	E V T	SS	F	3	1 2	A1A1 A3A3			

10. Accessories for medium-sized dosing pumps

Up to 121.5 gph [460 l/h]

Grundfos offer a comprehensive range of accessories covering every need when dosing with Grundfos pumps.

Accessories overview

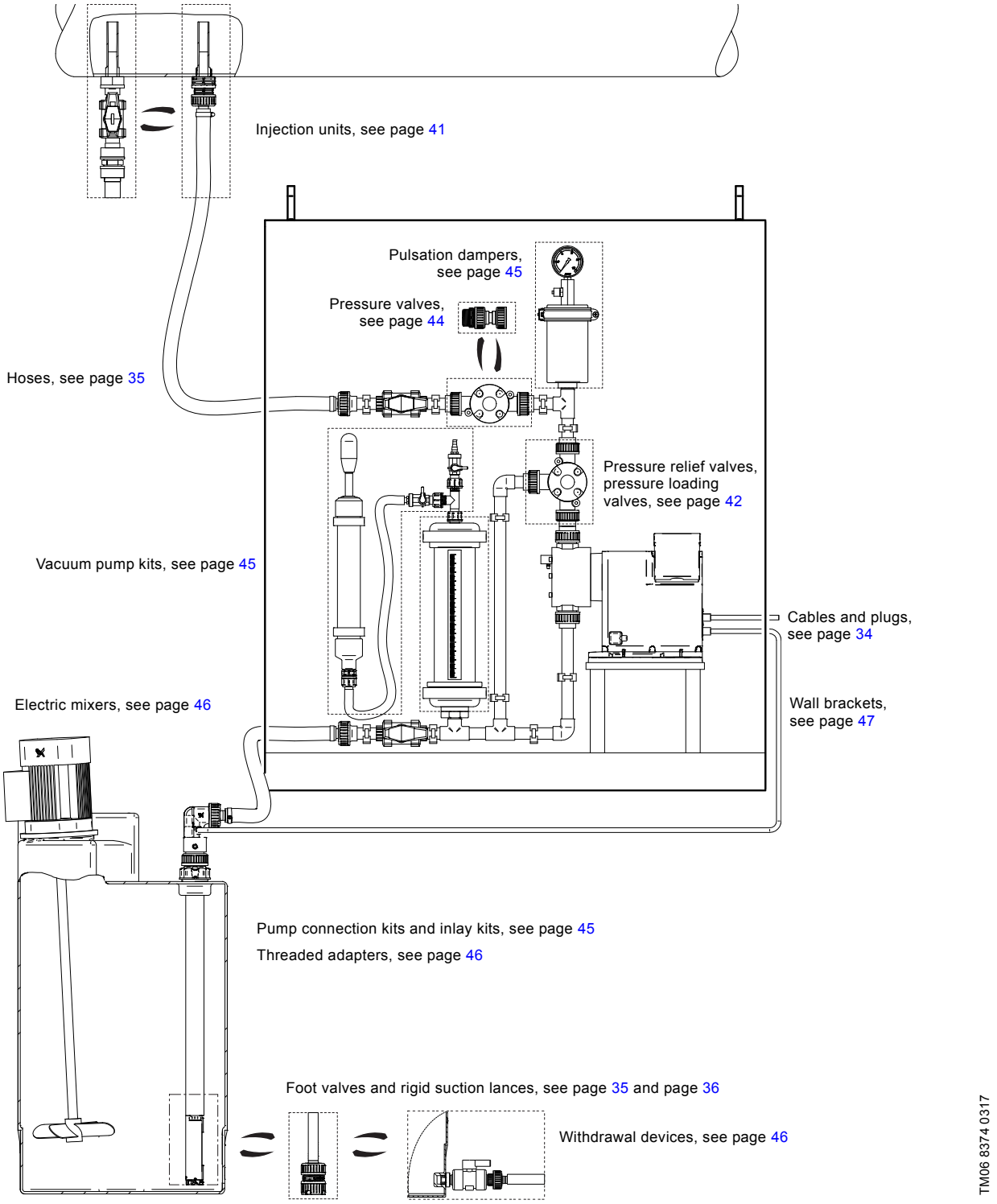

Fig. 25 Dosing pump with accessories

Cables and plugs

The listed cables and plugs are suitable for the connection of a pump to external control devices, such as process controllers, flow meters, start/stop contacts and level sensors.

TM01 8955 0900

Fig. 26 Cable and plug for DDA, DDE, DMX, DMH and DDI pumps

Technical data

- Cable material: PVC, 0.34 mm^2
- Plug size: M 12

Socket for DDA and DDE	Socket for DMX, DMH and DDI	Application		Pins	Plug type	Cable length [ft (m)]	Product number
	4	Input	Analog pulse External stop	4	Straight	6.56 (2)	96609014
						16.40 (5)	96609016
						No cable	96698715
					Angled	6.56 (2)	96693246
	3	Output	Relay 1 Relay 2	4	Straight	6.56 (2)	96609017
						16.40 (5)	96609019
						No cable	96696198
					Angled	6.56 (2)	96698716
	2	Output	Analog	5	Straight	6.56 (2)	96632921
						16.40 (5)	96632922
						No cable	96609031
					Angled	6.56 (2)	96699697
	5 DDI		Low level Empty tank	4	Straight	-	96698715
-	5 DMX/ DMH AR	Input	Low level Empty tank	3	Straight with soldered cable	-	96630345
		Adapter, flat-round	Low level Empty tank	4		-	96635010
-	6 DDI	Profibus	Y-connector			-	96693735
		Profibus	Terminating resistor			-	96693737
		Input/Output	GENIbus	5	Straight	9.84 (3)	98589048
-		Mains connection for DDI/DDA/DDE	110-240 VAC	3	Angled	-	96698717

Foot valves FV

Foot valves are installed at the lower end of the inlet hose. They have no level indication.

Foot valves include:

- Strainer (mesh size approx. 0.03 in. (0.8 mm)
- Non-return valvePipe connection set: threaded, 3/4" MNPT
- Pipe connection set: threaded, 3/4" FNPT, internal thread (stainless steel).

Remark: When using the foot valves with hose installation, a rigid pipe should be slipped over the hose to keep the inlet line straight and upright in the tank.

TM06 8427 0517

Dimensions

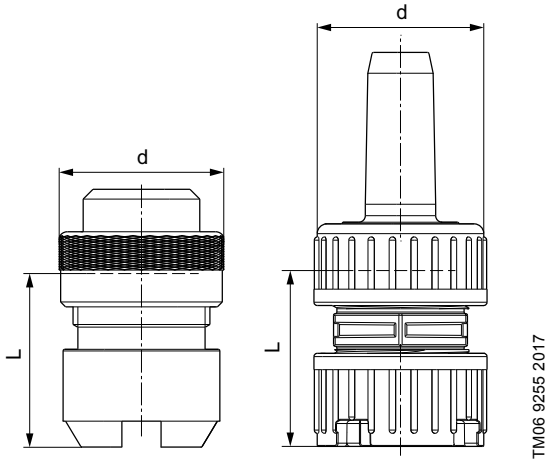

Fig. 27 Foot valves: stainless steel (left), PE/PVDF (right)

Material	L [in.(mm)]	d [in.(mm)]
PE/PVDF	2.25 (57)	2.09 (53)
SS	2.25 (57)	1.97 (50)

Technical data

Max. flow rate [gph (l/h)]	Materials			Product number
	Body	Gasket	Ball	
122 (460)	PE	FKM/EPDM	Ceramic	99168650
		PTFE	Ceramic	99168651
	PVDF	FKM/EPDM	Ceramic	99168652
		PTFE	Ceramic	99168653
	SS*	PTFE	SS*	99170594

* Body: SS 1.4571, 1.4435, 1.4305; ball: SS 1.4401

Rigid suction lances (RSL)

Grundfos offers a comprehensive range of rigid suction lances for a variety of chemical containers.

Rigid suction lances are installed at the lower end of the inlet hose. They are available either without level indication or with low-level and empty-tank indication. Their immersion depth is adjustable.

Rigid suction lances include:

- Strainer (mesh size approx. 0.08 in. (2.2 mm)
- Non-return valve
- Pipe connection set: threaded, 3/4" MNPT
- Adjustable tank connection with holes for a deaeration line.

Rigid suction lances with low-level and empty-tank indication additionally include:

- Reed switch unit with two floaters
- 16.40 ft. (5 meters) of cable with PE jacket
- M 12 plug to connect DDA, DDE, DME or DDI dosing pumps.

The contact type of the low-level and empty-tank indication is factory-set to NO. The contact type can be set to NC by turning the floaters upside down.

Electrical data of the level indication:

- Maximum voltage: 48 V
- Maximum current: 0.5 A
- Maximum load: 10 VA

TM06 8423 0517

Fig. 28 Rigid suction lance

Dimensions

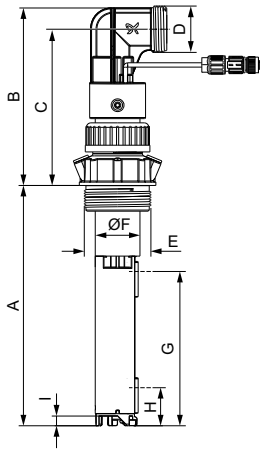

TM06 8130 0617

Fig. 29 Rigid suction lances

A [in. (mm)]	B [in. (mm)]	C [in. (mm)]	D	E
19.69 (500)	6.26 (159)	5.52 (140)	G 5/4	G 2
27.17 (690)				
38.58 (980)				
47.24 (1200)				

ØF [in. (mm)]	G* [in. (mm)]	H* [in. (mm)]	I [in. (mm)]
1.58 (40)	5.44 (138)	1.34 (34)	0.35 (8.7)

* Switching level for water

Dimensions/selection

For dosing tank type	Tank volume [gal (l)]	Recommended immersion depth (A) [in. (mm)]
Grundfos cylindrical tank	15.85 (60)	19.69 (500)
	26.4 (100)	27.17 (690)
	52.8 (200)	27.17 (690)
	79.3 (300)	38.58 (980)
	132.1 (500)	47.24 (1200)
	264.2 (1000)	47.24 (1200)
Grundfos square tank	26.4 (100)	27.17 (690)
L-ring drum*	31.7 (120)	38.58 (980)
	58.1 (220)	38.58 (980)
Steel drum*	57.1 (216)	38.58 (980)
Standard jerricans according to EN 12712*	8.7 (33) (large cap)	19.69 (500)
	6.6, 7.9, 8.7 (25, 30, 33)	19.69 (500)
	15.85 (60)	27.17 (690)
IBC*	all sizes	47.24 (1200)

* For suitable adapters, see *Accessories for rigid suction lances (RSL)* on page 38.

Technical data

Max. flow rate [g/h (l/h)]	Max. immersion depth (A) [in. (mm)]	Material in contact with liquid			Product number	
		Body	Gasket	Ball	RSL without level indication	RSL with level indication
122 (460)	19.69 (500)	PE	FKM/EPDM	Ceramic	99199371	99161948
			PTFE	Ceramic	99199372	99161949
	27.17 (690)	PE	FKM/EPDM	Ceramic	99199393	99161950
			PTFE	Ceramic	99199394	99161951
	38.58 (980)	PE	FKM/EPDM	Ceramic	99199395	99161952
			PTFE	Ceramic	99199396	99161963
	47.24 (1200)	PE	FKM/EPDM	Ceramic	99199397	99161964
			PTFE	Ceramic	99199398	99161965

Accessories for rigid suction lances (RSL)

Adapters for containers

These adapters allow the installation of standard rigid suction lances (G 2" thread) on different types of containers.

TM04 8506 0712

Fig. 30 Adapters for containers

Technical data

Adapter type	For container type	Remark	Product number
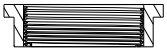 TM04 8470 0512	Counter nut for tanks without threaded opening, e.g. 26.4 gal (100 l) square tank or 264.1 gal (1000 l) cylindrical tank	PVC, grey	98071170
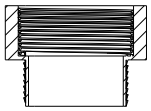 TM04 8471 0512	Containers with 2" NPT threaded opening	PVC, grey	98156690
	Drums with S 70 x 6 coarse thread (MAUSER 2")	PE, blue	98071171
	Drums with S 56 x 4 coarse thread (TriSure®)	PE, orange	98071172
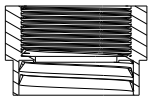 TM04 8473 0512	Jerricans with medium-sized opening (approx. ∅1.77 in. (∅45 mm), according to EN 12713	PE, yellow	98071174
	Jerricans with large opening (approx. ∅2.24 in. (∅57 mm), according to EN 12713	PE, brown	98071175
	US containers with bung hole of ∅2.48 in. (∅63 mm) (ASTM International)	PE, white	98071176
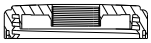 TM04 8472 0512	IBC (Intermediate Bulk Container) with opening of ∅5.9 in. (∅150 mm),S 160 x 7	PE, black	98071177

Emission protection kits

Gas emitted by liquid in a container can cause bad odNr and corrosion. Emission protection kits help avoid such problems. Rigid suction lances can be retrofitted with emission protection kits.

Two variants are available:

- Emission protection kit with snifting valve: No gas can escape from the container, but air can be drawn in.
- Emission protection kit for use with filter: Gas can escape from the container and air can be drawn in. The kit can be connected to a filter by means of a 4/6 mm hose.

Emission protection kits include:

- Gasket for the tank adapter
- Snifting valve or hose nipple 4/6 mm (hose is not included)
- Gasket for the cable outlet.

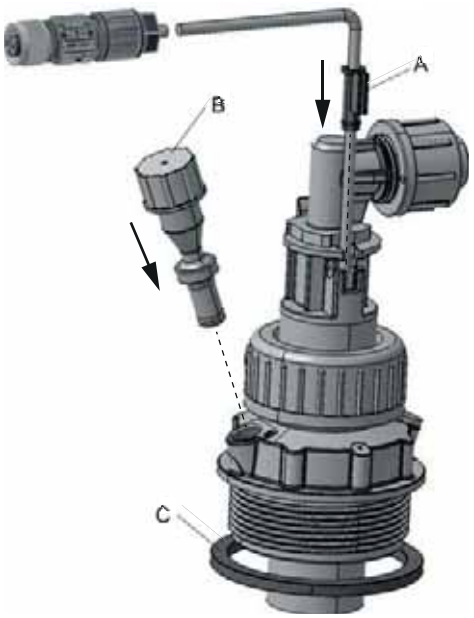

TM06 8372 0317

Fig. 31 Emission protection kit

Position	Description
A	Gasket for the cable outlet
B	Air valve
C	Gasket for the tank adapter

Order data

Variant	Product number
Emission protection kit with snifting valve	98071178
Emission protection kit for use with filter	98071179

M 12-plug-to-flat-plug adapter

The adapter allows to connect rigid suction lances or foot valves with level indication to pumps with a level input designed for flat plugs (e.g. DMX and DMH with AR control unit).

Order data

Description	Product number
M12-plug-to-flat-plug adapter	96635010

Level-control units

Grundfos level-control units are suitable for dosing pumps with input for level control.

The contact type of the reed switch unit is factory-set to NO. The contact type can be set to NC by turning the floater(s).

Electrical data

- Maximum voltage: 48 V
- Maximum current: 0.5 A
- Maximum load: 10 VA.

Level-control unit for electric stirrer protection

Level-control units for electric stirrer protection are used for rigid suction lances for pumps up to 15.85 gph (60 l/h) or 121.5 gph (460 l/h). They are clipped to the rigid suction lances at the required switch-off height above the stirrer propeller.

Level-control units can also be used for overfill protection or as an additional tank level indication.

A level-control unit for electric stirrer protection includes:

- Reed switch unit with 1 floater
- 16 ft (5 m)cable with PE jacket and open wire ends
- Clip for diameter of 1.50 in. (40 mm) or 1.25 in. (32 mm)
- Cable gland for mounting at the tank top.

Dimensions

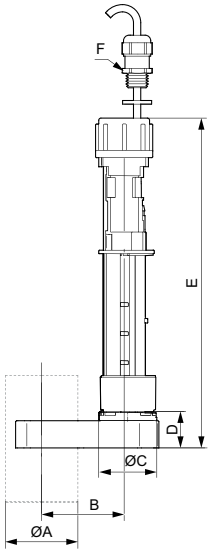

Fig. 32 Level-control unit for electric stirrer protection

ØA [in. (mm)]	B [in. (mm)]	ØC [in. (mm)]	D [in. (mm)]	E [in. (mm)]	F
1.5 (40)	1.87 (47.5)	1.25 (32)	0.78 (20)	7.16 (182)	M 12 x 1.5
1.25 (32)	1.69 (43)	1.25 (32)	1.10 (28)	7.48 (190)	M 12 x 1.5

Technical data

Description	Material	ØA [in. (mm)]	Product number
Level-control unit for electric stirrer protection	PE	1.26 (32)	98306210
		1.58 (40)	99174140

Flexible level-control unit

The flexible level-control unit is suitable for dosing pumps with level-control input and provides two level switches.

A flexible level-control unit includes:

- Reed switch unit with two floaters
- 16 ft (5 m) of cable with PE jacket and M 12 plug
- Weight that keeps the level-control unit in an upright position at the tank bottom
- PE cap, 2.28 in. (∅58 mm), for assembly in Grundfos cylindrical tanks, or for use with tank adapters.

Dimensions

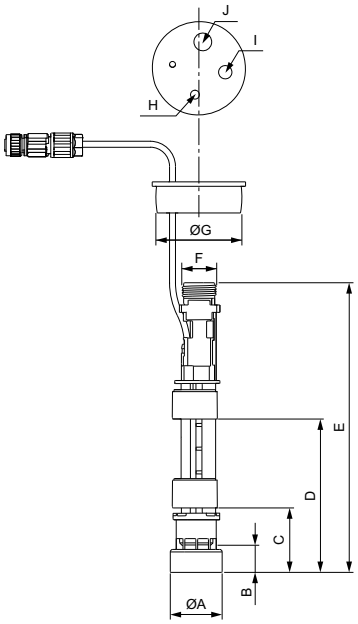

Fig. 33 Flexible level-control unit

ØA [in. (mm)]	B [in. (mm)]	C [in. (mm)]	D [in. (mm)]	E [in. (mm)]	F	ØG [in. (mm)]	H [in. (mm)]	I [in. (mm)]	J [in. (mm)]
1.37 (35)	0.74 (19)	1.71 (44)	4.05 (103)	7.71 (196)	G 5/8	2.28 (58)	0.23 (6)	0.35 (9)	0.47 (12)

Technical data

Description	Material	Product number
Flexible level-control unit	PE	98375695

Injection units

Injection units connect the dosing line with the process line. They ensure a minimum counterpressure of 10.15 psi (0.7 bar) and prevent backflow of the dosing medium.

In general, they include:

- Injection pipe with immersion depth of 4.73 in. (120 mm). PP, PVC and PVDF versions can be shortened.
- Spring-loaded non-return valve with 2.4610 (Alloy C-4) spring.
- Pipe connection set, threaded, 3/4" MNP.
- Pipe connection set (stainless steel): threaded, 3/4" FNPT, internal thread.

Standard injection units

TM06 8428 0517

Dimensions

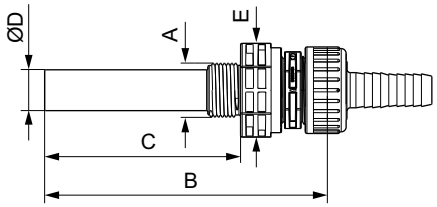

TM06 8076 4516

Fig. 34 Injection unit

A	B [in. (mm)]	C [in. (mm)]	ØD [in. (mm)]	Wrench size E [mm]	
1 NPT	7 (173)	5 (120)	1.05 (26.9)	PP, PVC, PVDF	50
				SS	46

Technical data

Max. flow rate [gph (l/h)]	Materials			Product number
	Body	Gasket	Ball	
122 (460)	PVC	FKM	Ceramic	99169409
		EPDM	Ceramic	99169412
		PTFE	Ceramic	99169423
	PP	FKM	Ceramic	99169424
		EPDM	Ceramic	99169425
	PVDF	FKM	Ceramic	99169426
		EPDM	Ceramic	99169427
		PTFE	Ceramic	99169428
	SS*	PTFE	SS**	99169429

* SS 1.4571 and SS 1.4408
** SS 1.4401

Injection units with ball valve

Injection units with ball valve are used for applications where the injection point must be closable. The ball valve is placed between the injection pipe and the spring-loaded non-return valve. Thus, the dosing line can be completely disconnected from the process. The non-return valve can be disassembled and cleaned without stopping the process and emptying the process line.

TM06 8429 0517

Dimensions

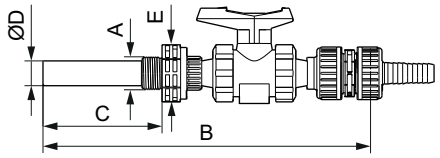

TM06 8370 0317

Fig. 35 Injection unit with ball valve, PVC version

A	B [in. (mm)]	C [in. (mm)]	ØD [in. (mm)]	Wrench size E [in. (mm)]
1 NPT	13 (330)	5 (120)	0.98 (25)	2 (50)

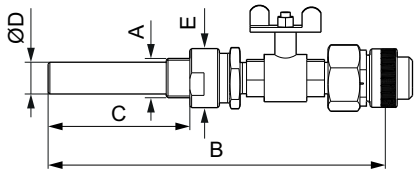

TM06 8371 0317

Fig. 36 Injection unit with ball valve, stainless steel version

A [in.]	B [in. (mm)]	C [in. (mm)]	ØD [in. (mm)]	Wrench size E [mm]
G1	11.24 (285.5)	4.72 (120)	1.05 (26.9)	46

Technical data

Max. flow rate [gph (l/h)]	Materials			Product number
	Body	Gasket	Ball	
122 (460)	PVC	FKM	Ceramic	99206591
		EPDM	Ceramic	99206592
	SS*	PTFE	SS**	99206604

* SS 1.4571 and SS 1.4408
** SS 1.4401

Pressure relief valves (PRV)

Pressure relief valves protect the pump and the outlet-side installations against excessive pressure. All pressurized dosing installations must include a pressure relief valve.

Pressure relief valves are installed in the outlet line near the pump using the two in-line connections. The side connection leads the relief liquid back into the tank.

- Relief pressure, adjustable from 44 psi (3 bar) to 145 psi (10 bar), is factory-set to 145 psi (10 bar)
- Maximum operating pressure 145 psi (10 bar)
  –
  – Pipe connection set: threaded, 3/4" MNPT
- Pipe connection set (stainless steel): threaded, Pipe connection set: threaded, 3/4" MNPT, internal thread.

TM06 8421 0517

Fig. 37 Pressure relief valve

Dimensions

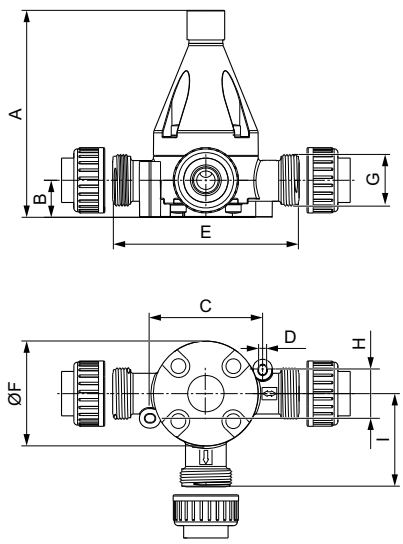

TM06 8077 4516

Fig. 38 Pressure relief valve (PP, PVC, PVDF version)

A [in. (mm)]	B [in. (mm)]	C [in. (mm)]	D [in. (mm)]	E [in. (mm)]	ØF [in. (mm)]	G	H [in. (mm)]	I [in. (mm)]
7 (168)	1 (30)	4 (92)	0.2 (6.5)	6 (150)	3 (85)	G 5/4	2 (40)	3 (75)

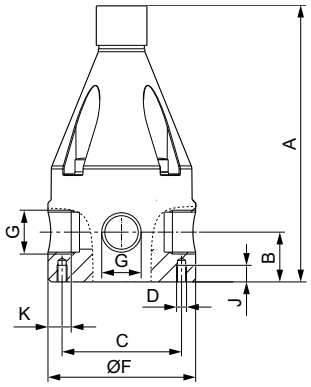

TM06 8247 4916

Fig. 39 Pressure relief valve, stainless steel version

A [in.(mm)]	B [in.(mm)]	C [in.(mm)]	D	ØF [in.(mm)]	G	J [in.(mm)]	K [in.(mm)]
7 (167)	1 (30)	2.5 (63)	M 6	3.5 (89)	Rp 3/4	0.39 (10)	0.68 (17.5)

Technical data

Max. flow rate [g/h (l/h)]	Materials		Product number
	Body	Gasket	
122 (460)	PVC	FKM/EPDM	99141153
		PTFE	99141157
	PP	FKM/EPDM	99141201
	PVDF	FKM/EPDM	99141225
		PTFE	99141227
	SS*	-	99141229

* SS 1.4571

Back pressure valve (BPV)

Back pressure valves maintain a constant counterpressure for the dosing pump.

They are used in the following applications:

- Too low counterpressure or no counterpressure at all
- Fluctuating system pressure with outlet-side pulsation damper
- To prevent syphoning, when the inlet pressure is higher than the counterpressure.

Pressure loading valves are installed in the outlet line after the pressure relief valve, and after the pulsation damper, if fitted.

- Opening pressure, adjustable from 43 psi (3 bar) to 145 psi (10 bar), is factory-set to 43 psi 3 (bar)
- Maximum operating pressure: 145 psi (10 bar)Pipe connection set: threaded, 3/4" MNPT
- Pipe connection set (stainless steel): threaded, Pipe connection set: threaded, 3/4" MNPT, internal thread.

Pressure loading valves may not be used as shut-off valves.

TM06 8422 0517

Fig. 40 Pressure loading valve

Dimensions

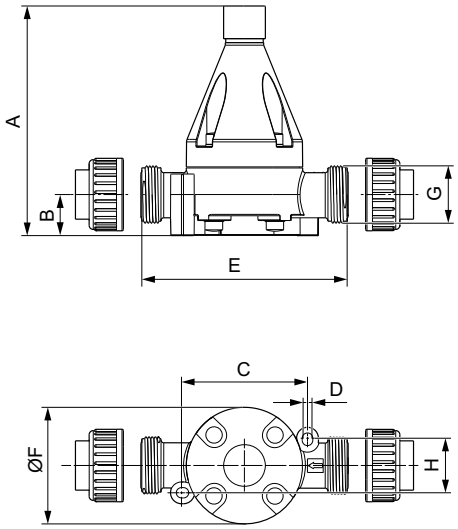

TM06 8090 4516

Fig. 41 Pressure loading valve (PP, PVC, PVDF version)

A [in. (mm)]	B [in. (mm)]	C [in. (mm)]	D [in. (mm)]	E [in. (mm)]	ØF [in. (mm)]	G	H [in. (mm)]
6.61 (168)	1.8 (30)	3.62 (92)	0.25 (6.5)	5.90 (150)	3.34 (85)	G 5/4	1.57 (40)

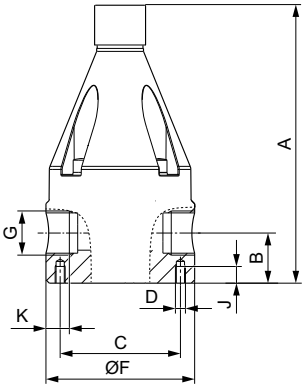

TM06 8246 4916

Fig. 42 Pressure loading valve, stainless steel version

A [in. (mm)]	B [in. (mm)]	C [in. (mm]	D	ØF [in. (mm]	G	J [in. (mm]	K [in. (mm]
6.50 (167)	1.18 (30)	2.48 (63)	M 6	3.50 (89)	Rp 3/4	0.27 (10)	0.68 (17.5)

Technical data

Max. flow rate [l/h]	Materials		Product number
	Body	Gasket	
122 (460)	PVC	FKM/EPDM	99140596
		PTFE	99140600
	PP	FKM/EPDM	99140630
	PVDF	FKM/EPDM	99140655
		PTFE	99140657
	SS*	-	99140660

* SS 1.4571

Pressure valves (PV)

Pressure valves provide a constant counterpressure of 43 psi (3 bar). They are particularly required for DDA-FCM pumps at very small flow rates.

Pressure valves are installed either directly on the pump outlet side, or on the pressure relief valve.

- Loading pressure: 43 psi (3 bar), not adjustable
- Maximum system pressure: 145 psi (10 bar)Spring material: 2.4610 (Alloy C-4)
- No connections included.

Dimensions

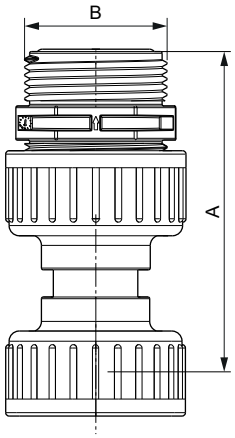

TM06 8404 0417

Fig. 43 Pressure valve

Material	A [in. (mm)]	B
PVC PVDF	3.7 (94)	G 5/4
SS	3.9 (100)	G 5/4

Technical data

Max. flow rate gph [l/h]	Material			Product number
	Body	Ball	Gaskets	
52.8 [200]	PVC	Ceramic	EPDM	99229021
			FKM	99229033
	PVDF	Ceramic	EPDM	99229018
			FKM	99229020

Pump connection kits and inlay kits

Retrofit pump connection kits and inlay kits for the integration of Grundfos standard dosing pumps into installations with various sizes of hoses or pipes.

A pump connection kit includes:

- 1 set of inlays
- 1 union nut

The inlay kits are used to connect pumps and accessories to pipes or hoses that differ from Grundfos standard sizes.

An inlay kit includes:

- 2 sets of inlays

TM06 8425 0517

Fig. 44 Pump connection kit

TM06 8430 0517

Fig. 45 Inlay kit

Technical data

Application	Connection type	For hose/pipe size		Connector type key code	Material	Product number	
		Internal	External			Connection kit	Inlay kit
Hose connection	Nipple and clamp	19/20 mm	-	U3	PP	99082037	-
Pipe connection	Gluing or welding inlay	-	25 mm		PVC	99082038	-
					PVDF	99082039	-
Hose connection	Cone and ring	13 mm	20 mm	A6	PVC	91835696	99170747
Hose connection	Nipple and clamp	19/20 mm or.3/4"	-	Q	PP	99169576	99169735
					PVC	99169603	99169740
					PVDF	99169728	99169738
Pipe connection	Welding inlay	-	25 mm	B4	PP	91835697	99171119
					PVDF	91835698	99171146
Pipe connection	Gluing inlay	-	25 mm	B0	PVC	96701989	99171177
			3/4" pipe (US) or 26.6 mm (BS)	C7	PVC	99170858	99171222
Pipe connection	External thread	3/4" NPT		A7	PVC	99082040	99171707
					PP	99082041	99171776
					PVDF	99082042	99171793
Pipe connection	Internal thread	Rp 3/4		A1	PP	99082043	99182104
					PVDF	99082044	99182109
					SS*	99082045	99182114
					Alloy C-4**	99082046	99182136
		3/4" NPT		A3	PP	99082047	99174974
					PVDF	99082048	99175004
					SS*	99082049	99175015
					Alloy C-4**	99082050	99175031
Pipe connection	Cutting-ring type	19 mm	22 mm	C3	SS*	96727555	-

* Union nut: SS 1.4401, inlay: SS 1.4571
** 2.4610 (Alloy C-4)

Adapters

Threaded adapters

Application example	Type	Threaded connection size		Materials		Product number
		Internal thread	External thread	Body	Gaskets	
DN 20 → DN 8	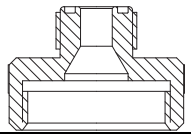 TM04 8301 0411	G 1 1/4"	G 5/8"	PP	FKM/EPDM	95730432
				PVC	FKM/EPDM	95730433
					PTFE	95730434
				PVDF	FKM/EPDM	95730435
					PTFE	95730436
DN 20 → DN 10	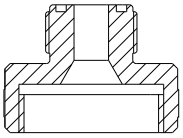 TM06 8416 0517	G 5/4"	G 3/4"	PP	FKM/EPDM	99227512
				PVC	FKM/EPDM	99227511
					PTFE	99228197
				PVDF	FKM/EPDM	99227829
					PTFE	99227533
DN 32 → DN 20	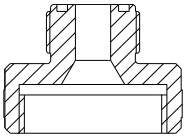 TM06 8417 0517	G 2"	G 5/4"	PP	FKM/EPDM	99227945
				PVC	FKM/EPDM	99227943
					PTFE	99227960
				PVDF	FKM/EPDM	99227953
					PTFE	99227948

Union nut adapters

A union nut adapter allows the direct assembly of a pressure loading valve (PLV) or a pressure relief valve (PRV) on the pump outlet valve.

Type	Threaded connection size		Body material	Product number
	Internal thread	Internal thread		
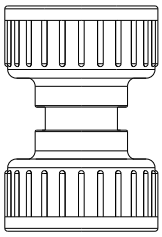 TM06 8418 0517	G 5/4	G 5/4	PP	99228667
			PVC	99228665
			PVDF	99228669

Elbow adapter

An elbow adapter can be installed if the space on the inlet side of the pump is confined.

Type	Threaded connection size	Body material	Product number
	Internal and external thread		
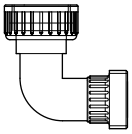 TM06 8129 4716	G 5/4	PVC	99168768

Tank accessories

Adapter plates for tank mounting

- Made of black HD-PE, including stainless steel screws and washers

Application	For pump type	Tank size [gal (l)]	Contents	Product number
2 pumps on 1 tank	SMART S DDA/DDC/DDE/DMX 221/DDI	15.85-132 (60-500)	1 adapter plate, 12 screws, 12 washers	98982080
1 pump on 1 tank	DMX 226 or DMH 251/252/253	52.8-132 (200-500)	1 adapter plate, 8 screws, 8 washers	99211241

Wall brackets

- For assembly of one of the mentioned pump types
- With installation material for wall mounting and pump mounting

For pump type	Material	Product number
DMX 221, DDI 222	PP	91836471
DMX 226, DMH 251-253, DME 60-10 / 150-4, SMART Digital XL DDA/DDE	PE	99211245

11. Pumped liquids

The resistance table below is intended as a general guide for material resistance (at room temperature), and does not replace testing of the chemicals and pump materials under specific working conditions.

The data shown are based on information from various sources available, but many factors (purity, temperature etc.) may affect the chemical resistance of a given material.

Note: Some of the liquids in this table may be toxic, corrosive or hazardous. Please be careful when handling these liquids.

Pumped liquid [68 °F (20 °C)]			Material							
			Dosing head			Gasket			Ball	
Description	Chemical formula	Concentration %	PVC	PVDF	SS 1.4401	FKM	EPDM	PTFE	Ceramic	PE (Accessories)
Acetic acid	CH_3COOH	25	●	●	●	-	●	●	●	●
		60	●	●	●	-	●	●	●	●
		85	-	●	❍	-	-	●	●	-
Aluminium chloride	$AlCl_3$	40	●	●	-	●	●	●	●	●
Aluminium sulphate	$Al_2(SO_4)_3$	60	●	●	●	●	●	●	●	●
Ammonia, aqueous	NH_4OH	28	●	-	●	-	●	●	●	●
Calcium hydroxide[1)]	$Ca(OH)_2$		●	●	●	●	●	●	●	●
Calcium hypochlorite	$Ca(OCl)_2$	20	●	●	-	●	●	●	●	●
Chromic acid	H_2CrO_4	10	●	●	●	●	●	●	●	●
		30	●	●	-	●	❍	●	●	●
		50	●	●	-	●	-	●	●	●
Copper sulphate	$CuSO_4$	30	●	●	●	●	●	●	●	●
Ferric chloride[2)]	$FeCl_3$	60	●	●	-	●	●	●	●	●
Ferric sulphate[2)]	$Fe_2(SO_4)_3$	60	●	●	❍	●	●	●	●	●
Ferrous chloride	$FeCl_2$	40	●	●	-	●	●	●	●	●
Ferrous sulphate	$FeSO_4$	50	●	●	●	●	●	●	●	●
Fluosilicic acid	H_2SiF_6	40	●	●	❍	-	❍	●	●	●
Hydrochloric acid	HCl	< 25	●	●	-	●	●	●	●	●
		25-37	●	●	-	●	❍	●	●	●
Hydrogen peroxide	H_2O_2	30	●	●	●	●	●	●	●	●
Nitric acid	HNO_3	30	●	●	●	●	●	●	●	●
		40	●	●	●	●	-	●	●	●
		70	-	●	●	●	-	●	●	?
Peracetic acid	CH_3COOOH	5-15	❍	●	❍	-	-	●	●	?
Potassium hydroxide	KOH	50	●	-	●	-	●	●	●	●
Potassium permanganate	$KMnO_4$	10	●	●	●	❍	●	●	●	●
Sodium chlorate	$NaClO_3$	30	●	●	●	●	●	●	●	●
Sodium chloride	NaCl	30	●	●	-	●	●	●	●	●
Sodium chlorite	$NaClO_2$	20	❍	●	-	●	●	●	●	●
Sodium hydroxide	NaOH	30	●	●	●	❍	●	●	●	●
		50	●	●	●	-	●	●	●	●
Sodium hypochlorite	NaClO	12-15	●	●	-	●	●	●	●	●
Sodium sulphide	Na_2S	30	●	●	●	●	●	●	●	●
Sodium sulphite	Na_2SO_3	20	●	●	●	●	●	●	●	●
Sodium thiosulfate	$Na_2S_2O_3$	10	●	●	●	●	●	●	●	●
Sulphurous acid	H_2SO_3	6	●	●	●	●	●	●	●	●
Sulphuric acid[3)]	H_2SO_4	< 80	●	●	-	●	❍	●	●	●
		80-96	●	●	-	●	-	●	●	-
		98	-	●	●	❍	-	●	●	-

● Resistant
❍ Limited resistance
- Not resistant

1) Once the pump is stopped, calcium hydroxide will sediment rapidly.
2) Risk of crystallization.
3) Reacts violently with water and generates much heat.
(Pump should be absolutely dry before dosing sulphuric acid.)

Further information:
http://product-selection.grundfos.com/liquids.html

12. Grundfos Product Center

Online search and sizing tool to help you make the right choice.

http://product-selection.grundfos.com

"SIZING" enables you to size a pump based on entered data and selection choices.

"REPLACEMENT" enables you to find a replacement product.
Search results will include information on

- the lowest purchase price
- the lowest energy consumption
- the lowest total life cycle cost.

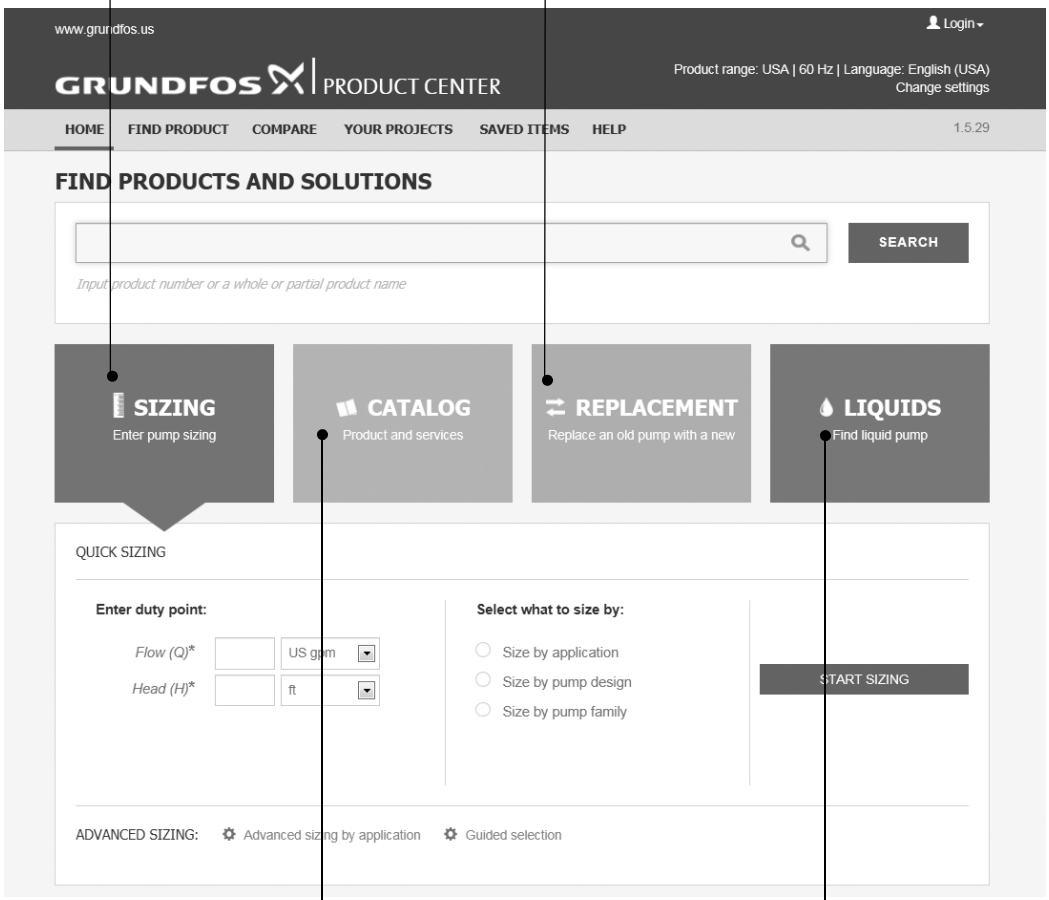

"CATALOG" gives you access to the Grundfos product catalog.

"LIQUIDS" enables you to find pumps designed for aggressive, flammable or other special liquids.

All the information you need in one place

Performance curves, technical specifications, pictures, dimensional drawings, motor curves, wiring diagrams, spare parts, service kits, 3D drawings, documents, system parts. The Product Center displays any recent and saved items — including complete projects — right on the main page.

Downloads

On the product pages, you can download Installation and Operating Instructions, Data Booklets, Service Instructions, etc. in PDF format.

Subject to alterations.

be think innovate

© Copyright Grundfos Holding A/S

The name Grundfos, the Grundfos logo, and **be think innovate** are registered trademarks owned by Grundfos Holding A/S or Grundfos A/S, Denmark. All rights reserved worldwide.

99257000 0717

ECM: 1210628

USA
Grundfos Chicago
3905 Enterprise Court
P.O. Box 6620
Aurora, IL 60598-0620
Phone: +1-630-236-5500
Fax: +1-630-236-5511

USA
Grundfos Kansas City
17100 West 118th Terrace
Olathe, KS 66061
Phone: +1-913-227-3400
Fax: +1-913-227-3500

México
Bombas GRUNDFOS de México S.A. de C.V.
Boulevard TLC No. 15
Parque Industrial Stiva
Aeropuerto
Apodaca, N.L.C.P. 66600
Phone: +52-81-8144 4000

GRUNDFOS