The new degree of comfort.™

Rheem High Efficiency Air Handler

RH1T/RH2T- Series

Constant Torque Motor (ECM)
Efficiencies up to 16 SEER

- RH1T/RH2T feature a Constant Torque motor (ECM) which provides enhanced SEER performance with most Rheem outdoor units.
- Versatile 4-way convertible design for upflow, downflow, horizontal left and horizontal right applications.
- Factory-installed indoor coil.
- Sturdy cabinet construction with 1.0 inch [25.4 mm] of foil faced insulation for excellent sound and insulating characteristics.
- Field-installed auxiliary electric heater kits provide exact heat for indoor comfort. Kits include circuit breakers which meet U.L. and cUL requirements for service disconnect.
- 1 1/2 ton [5.3 kW] through 5 ton [17.6 kW] models are between 42 1/2 to 57 inches [1080 to 1448 mm] tall and 22 inches [559 mm] deep.
- All models meet or exceed 330 to 400 CFM [156 to 189 L/s] per ton at .3 inches [.7 kPa] of external static pressure.
- Enhanced airflow up to .7" external static pressure.
- Evaporator is constructed of aluminum fins bonded to internally grooved aluminum tubing.
- Suitable for application in mobile homes.

TABLE OF CONTENTS

Engineering Features 3
Model Number Identification 4
Dimensional Data 5-6
Airflow Directional Data 7
Airflow Performance Data RH1T 8-14
Electrical Data RH1T 15-18
Airflow Performance Data RH2T 19-22
Electrical Data RH2T 23-24
Electrical Wiring 25
Accessories 25
Limited Warranty 26

Engineering Features

RH1T/RH2T- Series

- The most compact unit design available, all standard heat air handler models only 42 1/2 to 57 inches [1079 to 1448 mm] high.
- Attractive pre-painted cabinet exterior.
- Rugged wall steel cabinet construction, designed for added strength and versatility.
- 1.0" foil faced insulation mechanically retained in blower compartment for excellent thermal and sound performance.
- Four leg blower motor mount.
- Blower housing with controls, motor and blower. Slide out design for service and maintenance convenience.
- Traditional open wire element design for heat applications.
- Field convertible for vertical downflow, horizontal left hand or right hand air supply.
- 3 combustible floor base accessories fit all model sizes when required for downflow installations on combustible floors.
- Indoor coil design provides low air side pressure drop, high performance and extremely compact size.
- Expansion valve on indoor coil provides for operation with air conditioning or heat pump using the same coil.
- Coils are constructed of aluminum fins bonded to internally grooved aluminum tubing.
- Coils are tested at the factory with an extensive refrigerant leak check.
- Coils have copper sweat refrigerant connections.
- Coils utilize chatleff metering device connections.
- Molded polymer corrosion resistant condensate drain pan is provided on all indoor coils.
- Supply duct flanges provided as standard on air handler cabinet.
- Provisions for field electrical, connections available from either side or top of the air handler cabinet.
- Connection point for high voltage wiring is inside the air handler cabinet. Low voltage connection is made on the outside of the air handler cabinet.
- Concentric knockouts are provided for power connection to cabinet. Installer may pull desired hole size up to 2 inches [51 mm] for 1 1/2 inch [38 mm] conduit.
- Front refrigerant and drain connections.

[ ] Designates Metric Conversions

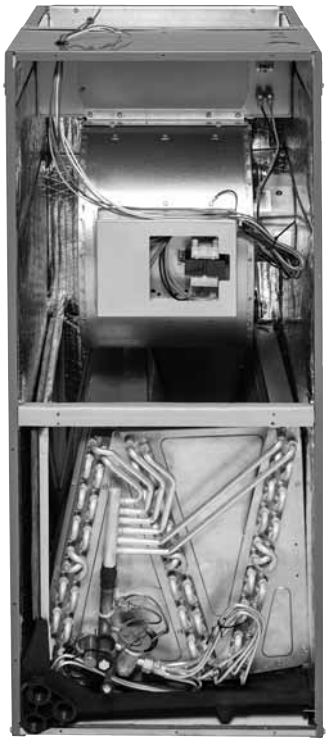

R H 1 T 24 17 S T A N A A ***

Option Code (see ADS-3803)
Blank = None

Minor Series
A = First

Voltage
A = 115/1/60
D = 480V/3/60
J = 208/240/1/60

Controls
C = Communicating
N = Non-Communicating

Major Series
A = First

Metering Device
T = TEV
E = EEV
P = Piston

Coil Efficiency
S = Standard
M = Medium
H = High

Width
17 = 17.5" [431.8 mm] (600-1200 CFM)
21 = 21" [533.4 mm] (800-1600 CFM)
24 = 24.5" [609.6 mm] (1400-1800 CFM)

Nominal Capacity
24 = 18,000 [5.27 kW]-24,000 [7.03 kW] BTU/H
36 = 30,000 [8.79 kW]-36,000 [10.55 kW] BTU/H
48 = 42,000 [12.31 kW]-48,000 [14.06 kW] BTU/H
60 = 60,000 [17.58 kW] BTU/H

Motor Type
T = Constant Torque (ECM)

Stages of Air Flow
1 = Single
2 = Two Stage

Product Category
H = Air Handler

Rheem

[ ] Designates Metric Conversions

Available Models at 115V A Voltage
RH1T2417STANAA
RH1T3617STANAA
RH1T3621MTANAA
RH1T3621HTANAA
RH1T4821STANAA
RH1T4821MTANAA
RH1T6021STANAA
RH1T4824STANAA
RH1T6024STANAA

Available Models at 208V J Voltage
RH1T2417STANJA
RH1T3617STANJA
RH1T3621MTANJA
RH1T3621HTANJA
RH1T4821MTANJA
RH1T4821STANJA
RH1T4824STANJA
RH1T6021STANAA
RH1T6024STANJA
RH2T2421MTANJA
RH2T3621MTANJA
RH2T4824MTANJA
RH2T6024STANJA

Available Models at 480V D Voltage
RH1T6024STANDA

Unit Dimensions

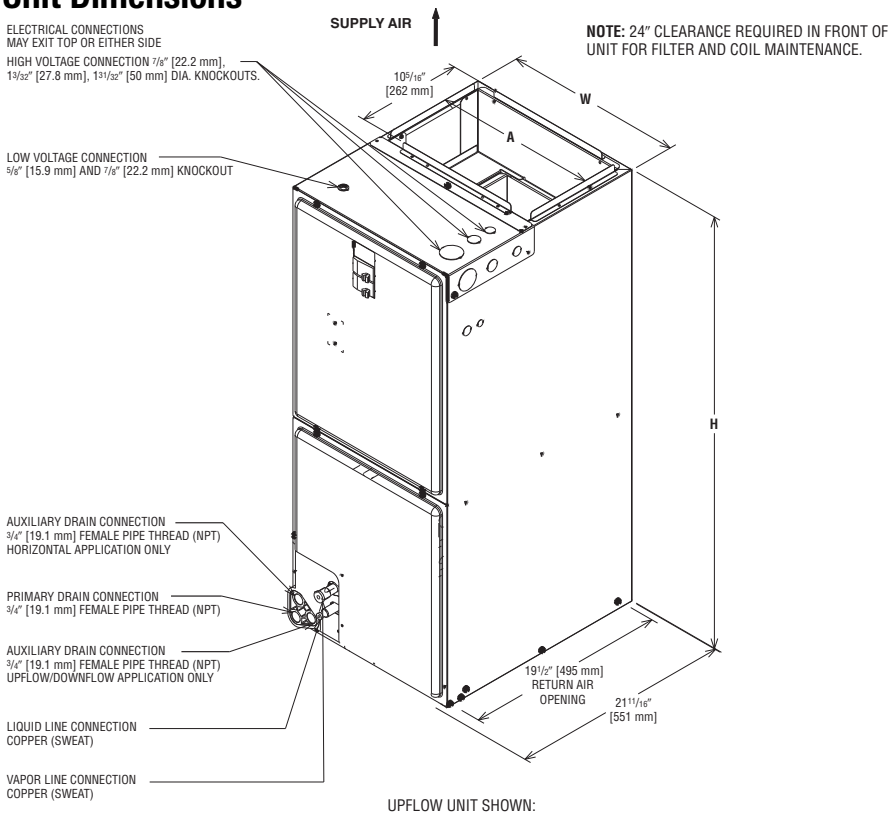

UPFLOW UNIT SHOWN:
UNIT MAY BE INSTALLED UPFLOW, DOWNFLOW, HORIZONTAL RIGHT OR LEFT AIR SUPPLY.

Return Air Opening Dimensions

Model Cabinet Size	Return Air Opening Width (Inches)	Return Air Opening Depth/Length (Inches)
17	15 7/8	19 3/4
21	19 3/8	19 3/4
24	22 7/8	19 3/4

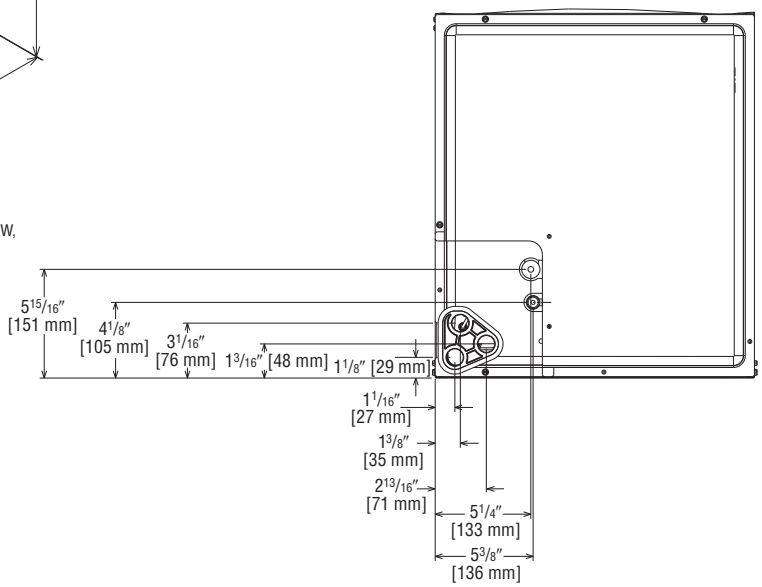

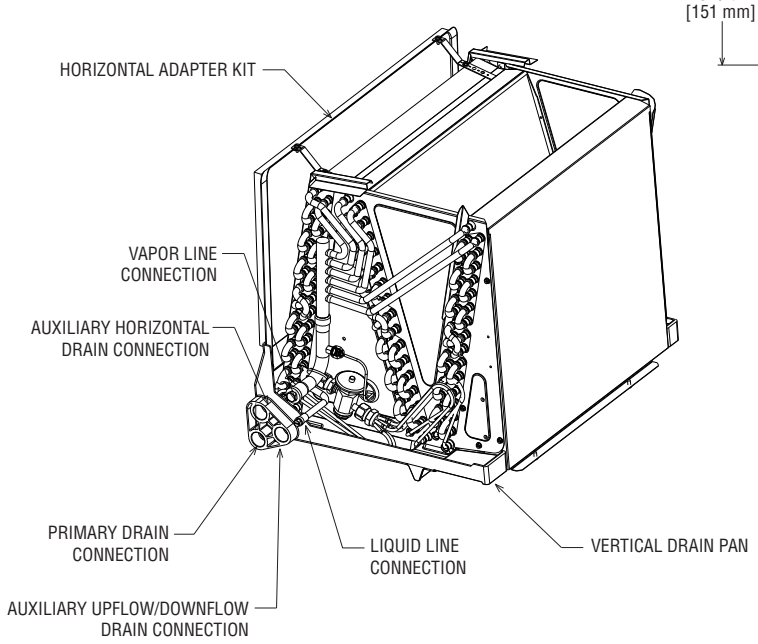

UPFLOW UNIT SHOWN:
UNIT MAY BE INSTALLED UPFLOW, DOWNFLOW, HORIZONTAL RIGHT OR LEFT AIR SUPPLY.

[ ] Designates Metric Conversions

( ) Designates Unit with Double Coil Cabinet

Unit Dimensions & Weights

Model Size RH1T	Refrigerant Connections Sweat (In.) [mm] ID		Unit Width "W" In. [mm]	Unit Height "H" In. [mm]	Supply Duct "A" In. [mm]	Air Flow CFM (Nom.) [L/s]		Unit Weight/Shipping Weight (Lbs.) [kg]
	Liquid	Vapor				Lo	Hi	Unit With Coil (Max. KW)
2417ST	3/8 [9.53]	3/4 [19.05]	17 1/2 [445]	42 1/2 [1080]	16 [406]	600 [283]	800 [378]	92/106 [42/48]
3617ST	3/8 [9.53]	3/4 [19.05]	17 1/2 [445]	42 1/2 [1080]	16 [406]	1000 [472]	1200 [566]	96/110 [44/50]
3621HT	3/8 [9.53]	7/8 [22.23]	21 [533]	57 [1448]	19 1/2 [495]	1000 [472]	1200 [566]	137/149 [62/68]
3621MT	3/8 [9.53]	7/8 [22.23]	21 [533]	50 1/2 [1282]	19 1/2 [495]	1000 [472]	1200 [566]	126/142 [57/64]
4821MT	3/8 [9.53]	7/8 [22.23]	21 [533]	57 [1448]	19 1/2 [495]	1400 [661]	1600 [755]	139/151 [63/68]
4821ST	3/8 [9.53]	7/8 [22.23]	21 [533]	50 1/2 [1282]	19 1/2 [495]	1400 [661]	1600 [755]	128/144 [56/65]
4824ST	3/8 [9.53]	7/8 [22.23]	24 1/2 [622]	50 1/2 [1282]	23 [585]	1600 [755]	—	142/160 [64/72]
6021ST	3/8 [9.53]	7/8 [22.23]	21 [533]	57 [1448]	19 1/2 [495]	1600 [755]	1725 [814]	139/151 [63/68]
6024ST	3/8 [9.53]	7/8 [22.23]	24 1/2 [622]	55 1/2 [1410]	23 [585]	—	1800 [850]	159/176 [72/80]

*Maximum dehumidification airflow.

Unit Dimensions & Weights

Model Size RH2T	Refrigerant Connections Sweat (In.) [mm] ID		Unit Width "W" In. [mm]	Unit Height "H" In. [mm]	Supply Duct "A" In. [mm]	Air Flow CFM (Nom.) [L/s]		Unit Weight/Shipping Weight (Lbs.) [kg]
	Liquid	Vapor				Lo	Hi	Unit With Coil (Max. KW)
2421MT	3/8 [9.53]	3/4 [19.05]	21 [533]	42 1/2 [1080]	19 1/2 [495]	525 [248]	700 [330]	111/126 [50/57]
3621MT	3/8 [9.53]	7/8 [22.23]	21 [533]	50 1/2 [1282]	19 1/2 [495]	800 [377]	1050 [495]	129/145 [59/66]
4824MT	3/8 [9.53]	7/8 [22.23]	24 1/2 [622]	55 1/2 [1410]	23 [584]	1050 [495]	1400 [660]	128/146 [58/66]
6024ST	3/8 [9.53]	7/8 [22.23]	24 1/2 [622]	55 1/2 [1410]	23 [584]	1200 [566]	1600 [755]	161/178 [73/81]

[ ] Designates Metric Conversions

Airflow Directional Data

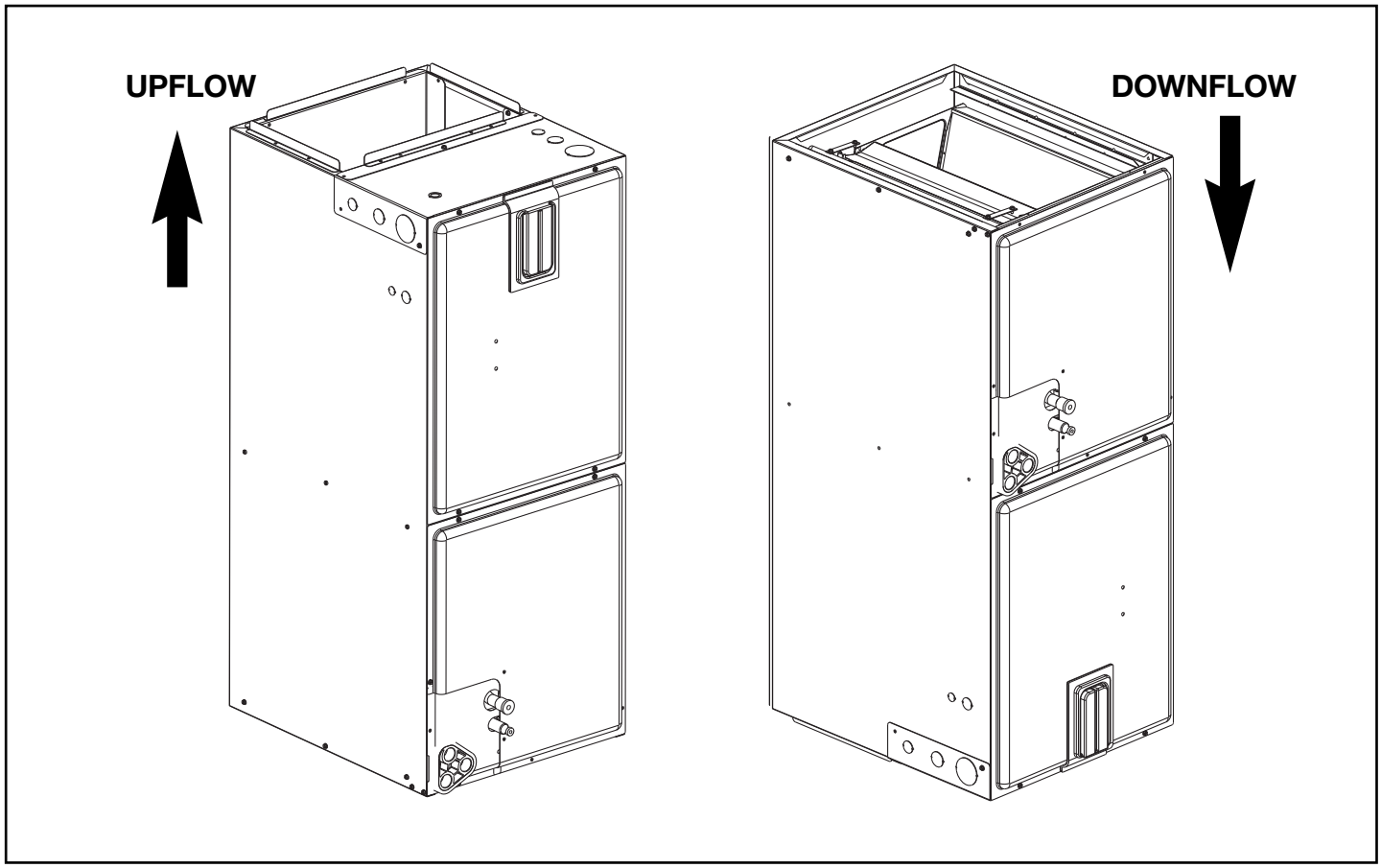

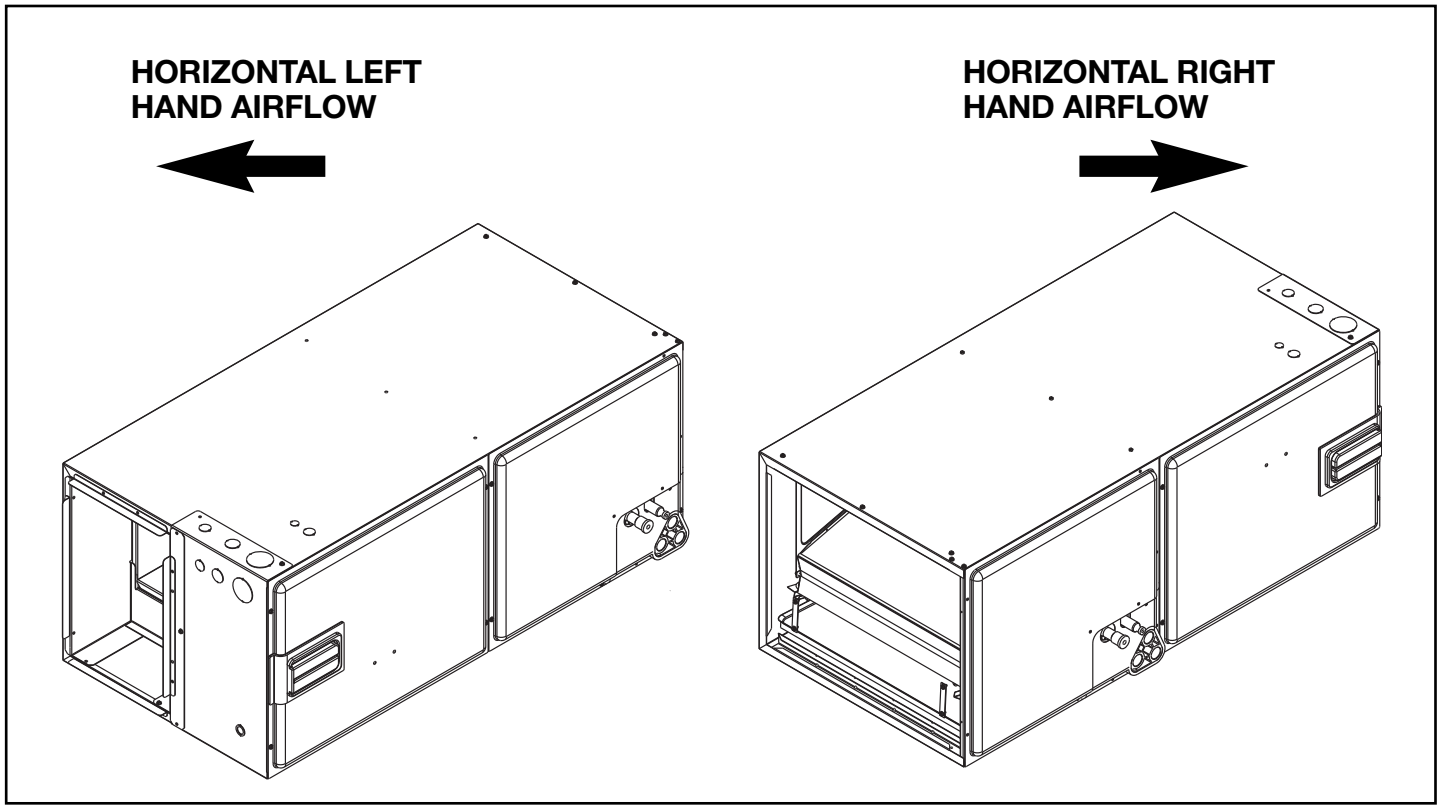

Airflow Performance

Airflow performance data is based on cooling performance with a coil and no filter in place. Select performance table for appropriate unit size, voltage and number of electric heaters to be used. Make sure external static applied to unit allows operation within the minimum and maximum limits shown in table below for both cooling and electric heat operation. For optimum blower performance, operate the unit in the .3 [8 mm] to .7 inches [18 mm] W.C. external static range. Units with coils should be applied with a minimum of .1 inch [3 mm] W.C. external static range.

Airflow Operating Limits

Model Cabinet Width	17		17/21		21		24	
Cooling BTUH x 1,000 Cooling Tons Nominal	-18 1.5	-24 2	-30 2.5	-36 3	-42 3.5	-48 4	-48 4	-60 5
Heat Pump or Air Conditioning Maximum Heat/Cool CFM [L/s] (37.5 CFM [18 L/s]/1,000 BTUH) (450 CFM [212 L/s]/Ton Nominal)	675 [319]	900 [425]	1125 [531]	1350 [637]	1575 [743]	1800 [850]	1800 [850]	1930 [911]
Heat Pump or Air Conditioning Nominal Heat/Cool CFM [L/s] (33.3 CFM [16 L/s]/1,000 BTUH) (400 CFM [189 L/s]/Ton Nominal)	600 [283]	800 [378]	1000 [472]	1200 [566]	1400 [661]	1600 [755]	1600 [755]	1800 [850]
Heat Pump or Air Conditioning Minimum Heat/Cool CFM [L/s] (30.0 CFM [14 L/s]/1,200 BTUH) (360 CFM [170 L/s]/Ton Nominal)	540 [255]	720 [340]	900 [425]	1080 [510]	1260 [595]	1440 [680]	1440 [680]	1620 [765]
Maximum kW Electric Heating & Minimum Electric Heat CFM [L/s]	13 487 [230]	13 617 [291]	18 814 [384]	18 1054 [497]	20 1171 [553]	25 1502 [709]	25 1502 [709]	30 1666 [786]
Maximum Electric Heat Rise °F [°C]	80 [26.7]	63 [17.2]	66 [18.9]	51 [10.6]	49 [9.4]	50 [10]	50 [10]	54 [12.2]

[ ] Designates Metric Conversions

115V/208V/240V/460V Airflow Performance Data—RH1T (Constant Torque (ECM) Motor)

Model No. RH1T	Tonnage Application	Motor Speed From Factory	Manufacturer Recommended Air-Flow Range (Min/Max) CFM	Blower Size/ Motor HP [W] # of Speed	Motor Speed		CFM [L/s] Air Delivery/RPM/Watts (No Filter) External Static Pressure—Inches W.C. [kPa]						
							0.1 [.02]	0.2 [.05]	0.3 [.07]	0.4 [.10]	0.5 [.12]	0.6 [.15]	0.7 [.17]
2417ST No Heat	1.5 Ton	5	683/485 [322/229 L/s]	10x8 1/3 HP [249] 5 Speed	2	CFM	837 [395]	713 [366]	608 [287]	554 [261]	485 [229]	—	—
						RPM	565	587	630	692	751	—	—
						Watts	95	81	88	74	66	—	—
					3	CFM	—	—	—	—	683 [322]	615 [290]	572 [270]
						RPM	—	—	—	—	789	842	892
						Watts	—	—	—	—	140	159	155
2417ST with 13 kW Heater	1.5 Ton	5	683/485 [322/229 L/s]	10x8 1/3 HP [249] 5 Speed	2	CFM	814 [384]	692 [326]	589 [278]	535 [252]	467 [220]	—	—
						RPM	592	613	656	719	778	—	—
						Watts	108	90	97	82	73	—	—
					3	CFM	—	—	—	—	808 [381]	629 [297]	584 [276]
						RPM	—	—	—	—	789	842	892
						Watts	—	—	—	—	148	168	163
2417ST No Heat	2 Ton	5	858/697 [405/329 L/s]	10x8 1/3 HP [249] 5 Speed	4	CFM	902 [426]	846 [399]	788 [372]	742 [350]	679 [320]	—	—
						RPM	596	645	694	741	791	—	—
						Watts	105	108	116	121	130	—	—
					5	CFM	—	—	—	—	858 [276]	816 [385]	770 [363]
						RPM	—	—	—	—	834	879	925
						Watts	—	—	—	—	185	182	214
2417ST with 13 kW Heater	2 Ton	5	683/485 [322/229 L/s]	10x8 1/3 HP [249] 5 Speed	4	CFM	882 [416]	827 [390]	769 [363]	723 [341]	661 [312]	—	—
						RPM	595	670	719	767	817	—	—
						Watts	113	125	124	129	197	—	—
					5	CFM	—	—	—	—	833 [393]	791 [373]	746 [352]
						RPM	—	—	—	—	852	898	944
						Watts	—	—	—	—	192	189	222
3617ST No Heater	2.5 Ton	5	935/1084 CFM [441/512 L/s]	10x8 1/2 HP [373] 5 Speed	2	CFM	1093 [516]	1050 [496]	1017 [480]	977 [461]	935 [441]	—	—
						RPM	671	725	764	809	852	—	—
						Watts	153	168	174	180	188	—	—
					3	CFM	—	—	—	—	1084 [512]	1040 [491]	1001 [472]
						RPM	—	—	—	—	896	936	971
						Watts	—	—	—	—	249	257	261
3617ST with 18 kW Heater	2.5 Ton	5	910/1059 CFM [429/500 L/s]	10x8 1/2 HP [373] 5 Speed	2	CFM	1068 [504]	1025 [484]	992 [468]	952 [449]	910 [429]	—	—
						RPM	711	765	804	849	892	—	—
						Watts	164	179	185	191	199	—	—
					3	CFM	—	—	—	—	1059 [500]	1015 [479]	976 [461]
						RPM	—	—	—	—	936	976	1011
						Watts	—	—	—	—	260	268	272
3617ST No Heater	3 Ton	5	1130/1275 CFM [533/602 L/s]	10x8 1/2 HP [373] 5 Speed	4	CFM	1270 [599]	1237 [584]	1199 [566]	1165 [550]	1130 [533]	—	—
						RPM	775	816	846	882	926	—	—
						Watts	237	249	259	268	277	—	—
					5	CFM	—	—	—	—	1275 [602]	1244 [587]	1211 [571]
						RPM	—	—	—	—	963	999	1029
						Watts	—	—	—	—	338	348	363
3617ST with 18 kW Heater	3 Ton	5	1105/1250 CFM [521/590 L/s]	10x8 1/2 HP [373] 5 Speed	4	CFM	1245 [588]	1212 [572]	1174 [554]	1140 [538]	1105 [521]	—	—
						RPM	815	856	886	922	966	—	—
						Watts	248	260	270	279	288	—	—
					5	CFM	—	—	—	—	1250 [590]	1219 [575]	1186 [560]
						RPM	—	—	—	—	1003	1039	1069
						Watts	—	—	—	—	349	359	374

[ ] Designates Metric Conversions

115V/208V/240V/460V Airflow Performance Data—RH1T (Constant Torque (ECM) Motor) (con't.)

Model No. RH1T	Tonnage Application	Motor Speed From Factory	Manufacturer Recommended Air-Flow Range (Min/Max) CFM	Blower Size/ Motor HP [W] # of Speed	Motor Speed		CFM [L/s] Air Delivery/RPM/Watts (No Filter) External Static Pressure—Inches W.C. [kPa]						
							0.1 [.02]	0.2 [.05]	0.3 [.07]	0.4 [.10]	0.5 [.12]	0.6 [.15]	0.7 [.17]
3621MT No Heater	2.5 Ton	5	854/1103 CFM [403/521 L/s]	10x10 1/2 HP [373] 5 Speed	2	CFM	1073 [506]	1016 [479]	963 [454]	906 [428]	854 [403]	—	—
						RPM	637	692	746	801	847	—	—
						Watts	130	142	153	165	176	—	—
					3	CFM	—	—	—	—	1103 [521]	1059 [500]	1000 [472]
						RPM	—	—	—	—	917	957	1001
						Watts	—	—	—	—	262	271	285
3621MT with 18 kW Heater	2.5 Ton	5	828/1016 CFM [391/479 L/s]	10x10 1/2 HP [373] 5 Speed	2	CFM	1044 [493]	988 [466]	936 [442]	880 [415]	828 [391]	—	—
						RPM	678	734	791	844	883	—	—
						Watts	141	155	158	171	182	—	—
					3	CFM	—	—	—	—	1016 [479]	961 [454]	904 [427]
						RPM	—	—	—	—	939	968	1015
						Watts	—	—	—	—	233	243	265
3621MT No Heater	3 & 3.5 Ton	5	1070/1288 CFM [505/608 L/s]	10x10 1/2 HP [373] 5 Speed	4	CFM	1264 [597]	1223 [577]	1171 [553]	1112 [525]	1070 [505]	—	—
						RPM	724	761	814	868	900	—	—
						Watts	198	208	222	237	245	—	—
					5	CFM	—	—	—	—	1288	1244	1200
						RPM	—	—	—	—	974 [608]	1012 [587]	1044 [566]
						Watts	—	—	—	—	345	362	371
3621MT with 18 kW Heater	3 & 3.5 Ton	5	1042/1257 CFM [492/593 L/s]	10x10 1/2 HP [373] 5 Speed	4	CFM	1233 [582]	1193 [563]	1142 [539]	1084 [512]	1042 [492]	—	—
						RPM	759	794	845	915	933	—	—
						Watts	219	215	227	251	261		
					5	CFM	—	—	—	—	1257 [593]	1213 [572]	1169 [552]
						RPM	—	—	—	—	1020	1023	1054
						Watts	—	—	—	—	355	368	376

Notes: Constant Torque motor speed changes.
All Constant Torque motors have 5 speed tabs. Speed tab 1 is for continuous fan. Speed tab 2 (low static) and Speed tab 3 (high static) are for lower tonnage. Speed tab 4 (low static) and Speed tab 5 (high static) are for higher tonnage.
Constant Torque air handlers are always shipped from factory at Speed tab 5, except for -4824, which is set at Speed tab 3. For instance, (-)H1T-HM2417JA is always shipped at high static 2-ton airflow (Speed tab 5). To change to 1.5-ton airflow, move the blue wire to Speed tab 2 or 3 on the Constant Torque motor.
The low static Speed tab 2 (lower tonnage) and 4 (higher tonnage) are used for external static below 0.5" WC. The high static Speed tab 3 (lower tonnage) and 5 (higher tonnage) are used for external static exceeding 0.5" WC. Move the blue wire to the appropriate Speed tab as required by the application needs.

- The airflow for continuous fan (Speed tab 1) is always set at 50% of the Speed tab 4.
- The above airflow table lists the airflow information for air handlers without heater and air handler with maximum heater allowed for each model.
- The following formula can be used to calculate the approximate airflow, if a smaller (N kW) than the maximum heater kit is installed.
  Approximate Airflow = Airflow without heater – (Airflow without heater – Airflow with maximum heater) x (N kW/maximum heater kW)

[ ] Designates Metric Conversions

115V/208V/240V/460V Airflow Performance Data—RH1T (Constant Torque (ECM) Motor) (con't.)

Model No. RH1T	Tonnage Application	Motor Speed From Factory	Manufacturer Recommended Air-Flow Range (Min/Max) CFM	Blower Size/ Motor HP [W] # of Speed	Motor Speed		CFM [L/s] Air Delivery/RPM/Watts (No Filter) External Static Pressure—Inches W.C. [kPa]						
							0.1 [.02]	0.2 [.05]	0.3 [.07]	0.4 [.10]	0.5 [.12]	0.6 [.15]	0.7 [.17]
4821ST No Heater	3.5 Ton	5	1337/1447 CFM [631/683 L/s]	10x10 3/4 HP [559] 5 Speed	2	CFM	1473 [695]	1442 [681]	1401 [661]	1373 [648]	1337 [631]	—	—
						RPM	781	825	867	905	949	—	—
						Watts	257	271	303	307	315	—	—
					3	CFM	—	—	—	—	1447 [683]	1433 [676]	1402 [662]
						RPM	—	—	—	—	987	1034	1065
						Watts	—	—	—	—	394	406	405
4821ST with 20 kW Heater	3.5 Ton	5	1297/1333 CFM [612/629 L/s]	10x10 3/4 HP [559] 5 Speed	2	CFM	1433 [676]	1402 [662]	1361 [642]	1333 [629]	1297 [612]	—	—
						RPM	831	875	919	954	989	—	—
						Watts	277	295	313	319	325	—	—
					3	CFM	—	—	—	—	1333 [629]	1300 [613]	1267 [598]
						RPM	—	—	—	—	1011	1046	1080
						Watts	—	—	—	—	350	364	377
4821ST No Heater	4 Ton	5	1535/1654 CFM [724/781 L/s]	10x10 3/4 HP [559] 5 Speed	4	CFM	1665 [786]	1631 [770]	1601 [756]	1572 [742]	1535 [724]	—	—
						RPM	853	893	934	968	1015	—	—
						Watts	351	387	401	406	422	—	—
					5	CFM	—	—	—	—	1654 [781]	1624 [766]	1563 [738]
						RPM	—	—	—	—	1036	1078	1095
						Watts	—	—	—	—	500	513	523
4821ST with 25 kW Heater	4 Ton	5	1495/1614 CFM [706/762 L/s]	10x10 3/4 HP [559] 5 Speed	4	CFM	1625 [767]	1591 [751]	1561 [737]	1532 [723]	1495 [706]	—	—
						RPM	894	932	970	1020	1052	—	—
						Watts	389	400	410	430	450	—	—
					5	CFM	—	—	—	—	1614 [762]	1584 [748]	1523 [719]
						RPM	—	—	—	—	1085	1090	1105
						Watts	—	—	—	—	514	520	530
4824ST No Heater	4 Ton	3	1545/1732 CFM [729/817 L/s]	11x11 3/4 HP [559] 5 Speed	2	CFM	1748 [825]	1669 [788]	1639 [773]	1599 [755]	1545 [729]	—	—
						RPM	660	698	734	762	795	—	—
						Watts	297	311	326	340	353	—	—
					3	CFM	—	—	—	—	1732 [817]	1683 [794]	1630 [769]
						RPM	—	—	—	—	840	872	899
						Watts	—	—	—	—	448	467	480
4824ST with 25 kW Heater	4 Ton	3	1505/1692 CFM [710/798 L/s]	11x11 3/4 HP [559] 5 Speed	2	CFM	1708 [806]	1629 [769]	1599 [755]	1559 [736]	1505 [710]	—	—
						RPM	680	736	760	790	820	—	—
						Watts	305	330	341	350	361	—	—
					3	CFM	—	—	—	—	1692 [798]	1643 [775]	1590 [750]
						RPM	—	—	—	—	865	890	1014
						Watts	—	—	—	—	460	470	481
6024ST No Heater	5 Ton	5	1739/1905 CFM [821/899 L/s]	11x11 3/4 HP [559] 5 Speed	4	CFM	1902 [898]	1862 [879]	1809 [854]	1781 [840]	1739 [821]	—	—
						RPM	712	749	787	815	856	—	—
						Watts	389	409	419	432	459	—	—
					5	CFM	—	—	—	—	1905 [899]	1866 [881]	1832 [865]
						RPM	—	—	—	—	894	924	950
						Watts	—	—	—	—	565	570	592
6024ST with 30 kW Heater	5 Ton	5	1699/1865 CFM [802/880 L/s]	11x11 3/4 HP [559] 5 Speed	4	CFM	1862 [879]	1822 [860]	1769 [835]	1741 [822]	1699 [802]	—	—
						RPM	750	790	810	850	880	—	—
						Watts	410	420	430	455	479	—	—
					5	CFM	—	—	—	—	1865 [880]	1826 [862]	1792 [846]
						RPM	—	—	—	—	920	945	970
						Watts	—	—	—	—	565	587	610

[ ] Designates Metric Conversions

115V/208V/240V/460V Airflow Performance Data—RH1T (Constant Torque (ECM) Motor) (con't.)

Model No. RH1T	Tonnage Application	Motor Speed From Factory	Manufacturer Recommended Air-Flow Range (Min/Max) CFM	Blower Size/ Motor HP [W] # of Speed	Motor Speed		CFM [L/s] Air Delivery/RPM/Watts (No Filter) External Static Pressure—Inches W.C. [kPa]						
							0.1 [.02]	0.2 [.05]	0.3 [.07]	0.4 [.10]	0.5 [.12]	0.6 [.15]	0.7 [.17]
6024ST No Heater	4 & 5 Ton	5	1517/1699 CFM [716/801 L/s]	11x11 3/4 HP [559] 5 Speed	2	CFM	1705 [800]	1661 [703]	1632 [770]	1572 [741]	1517 [915]	—	—
						RPM	663	701	741	782	819	—	—
						Watts	292	309	321	343	357	—	—
					3	CFM	—	—	—	—	1697 [801]	1646 [777]	1601 [756]
						RPM	—	—	—	—	857	895	920
						Watts	—	—	—	—	447	466	920
6024ST with 30 kW Heater	4 & 5 Ton	5	1482/1661 CFM [700/784 L/s]	11x11 3/4 HP [559] 5 Speed	2	CFM	1669 [788]	1625 [767]	1596 [753]	1537 [725]	1482 [700]	—	—
						RPM	698	739	763	816	842	—	—
						Watts	308	317	329	361	373	—	—
					3	CFM	—	—	—	—	1661 [784]	1611 [760]	1566 [739]
						RPM	—	—	—	—	882	915	939
						Watts	—	—	—	—	447	480	487

Notes:
- All 208/240V PSC motors have voltage taps for 208 and 240 volts.
- All 208/240V PSC motors are shipped on high speed and 240 volts.
- If the application external static is less than 0.5" WC, adjust the motor speed to the low static speed as described below:
  - Unplug the black motor wire off the relay on the control board and plug in the red motor wire.
  - Replace the cap on the black motor wire.
- Voltage change (208/240V motors):
  - Move the orange lead to transformer 208V tap from 240V tap. Replace the wire cap on 240V tap.
  - Unplug the purple motor wire off the transformer and plug in the yellow motor wire.
  - Replace the cap on the purple motor wire.
- The above airflow table lists the airflow information for air handlers without heater and air handler with maximum heater allowed for each model.
- The following formula can be used to calculate the approximate airflow, if a smaller (N kW) than the maximum heater kit is installed.
  Approximate Airflow = Airflow without heater - (Airflow without heater - Airflow with maximum heater) x (N kW/maximum heater kW)

[ ] Designates Metric Conversions

115V/208V/240V/480V Airflow Performance Data—RH1T (Constant Torque (ECM) Motor) (con't.)

Model No. RH1T	Nonimal Cooling Capacity Tons	Manufacturer Recommended Air-Flow Range (Min/Max) CFM	Blower Size/ Motor HP [W] # of Speed	Motor Speed From Factory	Motor Speed		CFM [L/s] Air Delivery/RPM/Watts (No Filter) External Static Pressure—Inches W.C. [kPa]						
							0.1 [.02]	0.2 [.05]	0.3 [.07]	0.4 [.10]	0.5 [.12]	0.6 [.15]	0.7 [.17]
3621H No Heat	2.5		10x10 1/2 HP [373] 2 Speed dual voltage	5	3	CFM	1305	1251	1205	1154	1101	1046	995
						RPM	668	727	752	797	832	888	914
						Watts	193	187	183	208	210	213	247
					2	CFM	1249	1193	1138	1082	1026	970	914
						RPM	732	780	828	877	925	973	1021
						Watts	114	123	133	142	151	161	170
3621H 18 Kw Heat	2.5		10x10 1/2 Hp [373] 2 Speed dual voltage	5	3	CFM	1280	1228	1176	1124	1072	1020	968
						RPM	695	736	777	817	858	899	939
						Watts	189	191	197	208	223	243	267
					2	CFM	1221	1166	1110	1054	998	942	886
						RPM	756	804	853	901	949	997	1045
						Watts	119	128	137	147	156	165	175
3621H No Heat	3		10x10 1/2 Hp [373] 2 Speed dual voltage	5	4	CFM	1468	1421	1377	1332	1285	1240	1192
						RPM	739	773	822	863	901	937	974
						Watts	238	268	276	307	313	302	297
					5	CFM	1272	1220	1174	1124	1067	1016	961
						RPM	658	706	753	797	838	877	925
						Watts	180	189	189	190	225	202	246
3621H 18 Kw Heat	3		10x10 1/2 Hp [373] 2 Speed dual voltage	5	5	CFM	1445	1399	1354	1308	1262	1216	1170
						RPM	759	799	839	878	918	958	997
						Watts	252	277	295	305	308	303	290
					4	CFM	1249	1197	1145	1093	1042	990	938
						RPM	684	728	772	816	859	903	947
						Watts	183	186	192	202	214	230	248
4821M No Heat	3.5		10x10 3/4 Hp [559] 2 Speed dual voltage	5	3	CFM	1590	1546	1512	1476	1443	1412	1378
						RPM	831	878	909	953	982	1012	1049
						Watts	377	373	379	390	406	420	427
					2	CFM	1489	1441	1401	1359	1316	1278	1231
						RPM	750	801	843	882	904	943	985
						Watts	244	270	282	277	288	288	290
4821M 20 Kw Heat	3.5		10x10 3/4 Hp [559] 2 Speed dual voltage	5	3	CFM	1567	1532	1497	1462	1427	1393	1358
						RPM	856	892	927	963	998	1034	1069
						Watts	374	379	386	396	408	423	440
					2	CFM	1465	1423	1381	1338	1296	1254	1212
						RPM	779	816	854	891	929	967	1004
						Watts	257	270	281	287	290	289	285
4821M No Heat	4		10x10 3/4 Hp [559] 2 Speed dual voltage	5	5	CFM	1803	1760	1217	1683	1648	1612	1576
						RPM	886	919	952	988	1019	1053	1088
						Watts	437	430	451	487	489	505	481
					4	CFM	1681	1641	1598	1564	1528	1494	1452
						RPM	825	855	907	940	956	1010	1045
						Watts	338	358	388	397	388	422	434

[ ] Designates Metric Conversions

115V/208V/240V/480V Airflow Performance Data—RH1T (Constant Torque (ECM) Motor) (con't.)

Model No. RH1T	Nonimal Cooling Capacity Tons	Manufacturer Recommended Air-Flow Range (Min/Max) CFM	Blower Size/ Motor HP [W] # of Speed	Motor Speed From Factory	Motor Speed		CFM [L/s] Air Delivery/RPM/Watts (No Filter) External Static Pressure—Inches W.C. [kPa]						
							0.1 [.02]	0.2 [.05]	0.3 [.07]	0.4 [.10]	0.5 [.12]	0.6 [.15]	0.7 [.17]
4821M 20 Kw Heat	4		10x10 3/4 Hp [559] 2 Speed dual voltage	5	5	CFM	1779	1742	1704	1667	1630	1592	1555
						RPM	903	936	970	1003	1037	1070	1104
						Watts	440	451	463	474	486	497	509
					4	CFM	1659	1621	1584	1546	1509	1471	1434
						RPM	843	879	916	952	988	1025	1061
						Watts	352	367	382	397	412	427	442
6021S No Heat	4 & 5		10x10 3/4 Hp [559] 2 Speed dual voltage	5	3	CFM	1841	1798	1758	1728	1699	1660	1629
						RPM	898	930	967	997	1027	1057	1092
						Watts	469	470	484	490	498	512	531
					2	CFM	1716	1669	1631	1594	1555	1522	1483
						RPM	861	887	911	948	984	1015	1050
						Watts	359	375	379	397	427	419	427
6021S 30 Kw Heat	4 & 5		10x10 3/4 Hp [559] 2 Speed dual voltage	5	3	CFM	1817	1783	1748	1713	1679	1644	1609
						RPM	915	947	979	1011	1043	1076	1108
						Watts	470	476	484	494	507	521	538
					2	CFM	1691	1653	1615	1577	1538	1500	1462
						RPM	871	903	935	967	999	1031	1063
						Watts	367	379	392	404	416	428	440
6021S No Heat	5		10x10 3/4 Hp [559] 2 Speed dual voltage	5	5	CFM	2042	2003	1968	1931	1903	1868	1835
						RPM	962	994	1043	1050	1102	1135	1159
						Watts	612	632	616	649	673	657	711
					4	CFM	1886	1849	1809	1776	1741	1704	1677
						RPM	917	948	981	1012	1047	1076	1108
						Watts	491	501	509	525	540	560	569
6021S 30 Kw Heat	5		10x10 3/4 Hp [559] 2 Speed dual voltage	5	5	CFM	2021	1987	1953	1918	1884	1850	1816
						RPM	980	1014	1047	1080	1113	1147	1180
						Watts	618	625	636	650	668	690	715
					4	CFM	2004	1970	1936	1901	1867	1833	1799
						RPM	997	1030	1064	1097	1130	1163	1196
						Watts	617	633	649	666	682	698	714

[ ] Designates Metric Conversions

Electrical Data – Blower Motor Only – No Electric Heat RH1T

Model RH1T	Voltage	Application Phase*	Hertz	HP [W]	RPM	Speeds	Circuit Amps.	Minimum Circuit Ampacity	Maximum Circuit Protector
2417ST	208/240	1 & 3	60	1/3 [249]	300-1100	4	1.6	2	15
3617ST				1/2 [373]	300-1100	4	2.7	4	15
3621MT/3621H				1/2 [373]	300-1100	4	3.8	5	15
4821ST/4821M/6021S				3/4 [559]	300-1100	4	3.8	5	15
6024ST/4824ST				3/4 [559]	300-1100	4	4.6	6	15
2417ST	115	1	60	1/3 [249]	300-1100	4	4.8	6	15
3617ST				1/2 [373]	300-1100	4	6.8	9	15
3621MT/3621H				1/2 [373]	300-1100	4	6.8	9	15
4821ST/4821M/6021S				3/4 [559]	300-1100	4	8.4	11	15
6024ST				3/4 [559]	300-1100	4	8.4	11	15
6024ST	480	3	60	3/4 [559]	300-1100	4	3.2	4	15

* Blower motors are all single phase motors.

[ ] Designates Metric Conversions

Electrical Data – With Electric Heat RH1T

Installation of the U.L. Listed original equipment manufacturer provided heater kits listed in the following table is recommended for all auxiliary heating requirements.

Air Handler Model RH1T	Heater Model No.	Heater kW (208/240V) (480V)	PH/HZ	No. Elements kW Per	Type Supply Circuit Single Circuit Multiple	Circuit Amps.	Motor Ampacity	Minimum Circuit Ampacity	Maximum Circuit Protector
2417STAN	RXBH-17?03J	2.2/3	1/60	1 - 3	SINGLE	10.8/12.5	2.8	18/20	20/20
	RXBH-1724?05J	3.6/4.8	1/60	1 - 4.8	SINGLE	17.3/20	2.8	26/29	30/30
	RXBH-1724?07J	5.4/7.2	1/60	2 - 3.6	SINGLE	26/30	1.6	35/40	35/40
	RXBH-1724?10J	7.2/9.6	1/60	2 - 4.8	SINGLE	34.6/40	2.8	47/54	50/60
	RXBH-1724A10C	7.2/9.6	3/60	3 - 3.2	SINGLE	20/23.1	2.8	29/33	30/35
	RXBH-1724A13J	9.4/12.5	1/60	3 - 4.17	SINGLE	45.1/52.1	2.8	60/69	60/70
	RXBH-1724A13J	3.1/4.2	1/60	1 - 4.17	MULTIPLE CKT 1	15/17.4	2.8	23/26	25/30
	RXBH-1724A13J	6.3/8.3	1/60	2 - 4.17	MULTIPLE CKT 2	30.1/34.7	0	38/44	40/45
3617STAN	RXBH-17?03J	2.2/3	1/60	1 - 3	SINGLE	10.8/12.5	4.1	19/21	20/25
	RXBH-1724?05J	3.6/4.8	1/60	1 - 4.8	SINGLE	17.3/20	4.1	27/31	30/35
	RXBH-1724?07J	5.4/7.2	1/60	2 - 3.6	SINGLE	26/30	4.1	38/43	40/45
	RXBH-1724?10J	7.2/9.6	1/60	2 - 4.8	SINGLE	34.6/40	4.1	49/56	50/60
	RXBH-1724A10C	7.2/9.6	3/60	3 - 3.2	SINGLE	20/23.1	4.1	31/35	35/35
	RXBH-1724A13J	9.4/12.5	1/60	3 - 4.17	SINGLE	45.1/52.1	4.1	62/71	70/80
	RXBH-1724A13J	3.1/4.2	1/60	1 - 4.17	MULTIPLE CKT 1	15/17.4	4.1	24/27	25/30
	RXBH-1724A13J	6.3/8.3	1/60	2 - 4.17	MULTIPLE CKT 2	30.1/34.7	0	38/44	40/45
	RXBH-1724A15C	10.8/14.4	3/60	3 - 4.8	SINGLE	30/34.6	4.1	43/49	45/50
	RXBH-1724A15J	10.8/14.4	1/60	3 - 4.8	SINGLE	51.9/60	4.1	70/81	70/90
	RXBH-1724A15J	3.6/4.8	1/60	1 - 4.8	MULTIPLE CKT 1	17.3/20	4.1	27/31	30/35
	RXBH-1724A15J	7.2/9.6	1/60	2 - 4.8	MULTIPLE CKT 2	34.6/40	0	44/50	45/50
	RXBH-1724A18J	12.8/17	1/60	3 - 5.67	SINGLE	61.6/70.8	4.1	83/94	90/100
	RXBH-1724A18J	4.3/5.7	1/60	1 - 5.67	MULTIPLE CKT 1	20.5/23.6	4.1	31/35	35/35
	RXBH-1724A18J	8.5/11.3	1/60	2 - 5.67	MULTIPLE CKT 2	41.1/47.2	0	52/60	60/60
3621HTAN/ 4821MTAN/ 4821STAN/ 6021STAN	RXBH-1724?03J	2.2/3	1/60	1 - 3	SINGLE	10.8/12.5	4.1	19/21	20/25
	RXBH-1724?05J	3.6/4.8	1/60	1 - 4.8	SINGLE	17.3/20	4.1	27/31	30/35
	RXBH-1724?07J	5.4/7.2	1/60	2 - 3.6	SINGLE	26/30	4.1	38/43	40/45
	RXBH-1724?10J	7.2/9.6	1/60	2 - 4.8	SINGLE	34.6/40	4.1	49/56	50/60
	RXBH-1724A10C	7.2/9.6	3/60	3 - 3.2	SINGLE	20/23.1	4.1	31/35	35/35
	RXBH-1724A13J	9.4/12.5	1/60	3 - 4.17	SINGLE	45.1/52.1	4.1	62/71	70/80
	RXBH-1724A13J	3.1/4.2	1/60	1 - 4.17	MULTIPLE CKT 1	15/17.4	4.1	24/27	25/30
	RXBH-1724A13J	6.3/8.3	1/60	2 - 4.17	MULTIPLE CKT 2	30.1/34.7	0	38/44	40/45
	RXBH-1724A15C	10.8/14.4	3/60	3 - 4.8	SINGLE	30/34.6	4.1	43/49	45/50
	RXBH-1724A15J	10.8/14.4	1/60	3 - 4.8	SINGLE	51.9/60	4.1	70/81	70/90
	RXBH-1724A15J	3.6/4.8	1/60	1 - 4.8	MULTIPLE CKT 1	17.3/20	4.1	27/31	30/35
	RXBH-1724A15J	7.2/9.6	1/60	2 - 4.8	MULTIPLE CKT 2	34.6/40	0	44/50	45/50

- **Supply circuit protective devices may be fuses or "HACR" type circuit breakers.**
- **Largest motor load is included in single circuit and multiple circuit 1.**
- **If non-standard fuse size is specified, use next size larger standard fuse size.**
- **J Voltage (230V) single phase air handler is designed to be used with single or three phase 230 volt electric heaters. In the case of connecting 3-phase power to the air handler terminal block without the heater, bring only two leads to the terminal block cap, insulate and fully secure the third lead.**

[ ] Designates Metric Conversions

Electrical Data – With Electric Heat RH1T (Cont.)

Installation of the U.L. Listed original equipment manufacturer provided heater kits listed in the following table is recommended for all auxiliary heating requirements.

Air Handler Model RH1T	Heater Model No.	Heater kW (208/240V) (480V)	PH/HZ	No. Elements kW Per	Type Supply Circuit Single Circuit Multiple	Circuit Amps.	Motor Ampacity	Minimum Circuit Ampacity	Maximum Circuit Protector
3621HTAN/	RXBH-1724A18J	12.8/17	1/60	3 - 5.67	SINGLE	61.6/70.8	4.1	83/94	90/100
	RXBH-1724A18J	4.3/5.7	1/60	1 - 5.67	MULTIPLE CKT 1	20.5/23.6	4.1	31/35	35/35
	RXBH-1724A18J	8.5/11.3	1/60	2 - 5.67	MULTIPLE CKT 2	41.1/47.2	0	52/60	60/60
	RXBH-24A20C	14.4/19.2	3/60	6 - 3.2	SINGLE	40/46.2	4.1	56/63	60/70
	RXBH-24A20C	7.2/9.6	3/60	3 - 3.2	MULTIPLE CKT 1	20/23.1	4.1	31/35	35/35
	RXBH-24A20C	7.2/9.6	3/60	3 - 3.2	MULTIPLE CKT 2	20/23.1	0	25/29	25/30
	RXBH-24A20J	14.4/19.2	1/60	4 - 4.8	SINGLE	69.2/80	4.1	92/106	100/110
	RXBH-24A20J	7.2/9.6	1/60	2 - 4.8	MULTIPLE CKT 1	34.6/40	4.1	49/56	50/60
	RXBH-24A20J	7.2/9.6	1/60	2 - 4.8	MULTIPLE CKT 2	34.6/40	0	44/50	45/50
	RXBH-24A25C	18/24	3/60	6 - 4	SINGLE	50/57.8	4.1	68/78	70/80
	RXBH-24A25C	9/12	3/60	3 - 4	MULTIPLE CKT 1	25/28.9	4.1	37/42	40/45
	RXBH-24A25C	9/12	3/60	3 - 4	MULTIPLE CKT 2	25/28.9	0	32/37	35/40
	RXBH-24A25J	18/24	1/60	6 - 4	SINGLE	86.4/99.9	4.1	114/130	125/150
	RXBH-24A25J	6/8	1/60	2 - 4	MULTIPLE CKT 1	28.8/33.3	4.1	42/47	45/50
	RXBH-24A25J	6/8	1/60	2 - 4	MULTIPLE CKT 2	28.8/33.3	0	37/42	40/45
	RXBH-24A25J	6/8	1/60	2 - 4	MULTIPLE CKT 3	28.8/33.3	0	37/42	40/45
3621MTAN	RXBH-1724?05J	3.6/4.8	1/60	1 - 4.8	SINGLE	17.3/20	4.1	27/31	30/35
	RXBH-1724?07J	5.4/7.2	1/60	2 - 3.6	SINGLE	26/30	4.1	38/43	40/45
	RXBH-1724?10J	7.2/9.6	1/60	2 - 4.8	SINGLE	34.6/40	4.1	49/56	50/60
	RXBH-1724A10C	7.2/9.6	3/60	3 - 3.2	SINGLE	20/23.1	4.1	31/35	35/35
	RXBH-1724A15C	10.8/14.4	3/60	3 - 4.8	SINGLE	30/34.6	4.1	43/49	45/50
	RXBH-1724A15J	10.8/14.4	1/60	3 - 4.8	SINGLE	51.9/60	4.1	70/81	70/90
	RXBH-1724A15J	3.6/4.8	1/60	1 - 4.8	MULTIPLE CKT 1	17.3/20	4.1	27/31	30/35
	RXBH-1724A15J	7.2/9.6	1/60	2 - 4.8	MULTIPLE CKT 2	34.6/40	0	44/50	45/50
	RXBH-1724A18J	12.8/17	1/60	3 - 5.67	SINGLE	61.6/70.8	4.1	83/94	90/100
	RXBH-1724A18J	4.3/5.7	1/60	1 - 5.67	MULTIPLE CKT 1	20.5/23.6	4.1	31/35	35/35
	RXBH-1724A18J	8.5/11.3	1/60	2 - 5.67	MULTIPLE CKT 2	41.1/47.2	0	52/60	60/60

- **Supply circuit protective devices may be fuses or "HACR" type circuit breakers.**
- **Largest motor load is included in single circuit and multiple circuit 1.**
- **If non-standard fuse size is specified, use next size larger standard fuse size.**
- **J Voltage (230V) single phase air handler is designed to be used with single or three phase 230 volt electric heaters. In the case of connecting 3-phase power to the air handler terminal block without the heater, bring only two leads to the terminal block cap, insulate and fully secure the third lead.**

[ ] Designates Metric Conversions

Electrical Data – With Electric Heat RH1T (Cont.)

Installation of the U.L. Listed original equipment manufacturer provided heater kits listed in the following table is recommended for all auxiliary heating requirements.

Air Handler Model RH1T	Heater Model No.	Heater kW (208/240V) (480V)	PH/HZ	No. Elements kW Per	Type Supply Circuit Single Circuit Multiple	Circuit Amps.	Motor Ampacity	Minimum Circuit Ampacity	Maximum Circuit Protector
4824STAN/ 6024STAN	RXBH-1724?03J	2.2/3	1/60	1 - 3	SINGLE	10.8/12.5	6	21/24	25/25
	RXBH-1724?05J	3.6/4.8	1/60	1 - 4.8	SINGLE	17.3/20	6	30/33	30/35
	RXBH-1724?07J	5.4/7.2	1/60	2 - 3.6	SINGLE	26/30	6	40/45	40/45
	RXBH-1724?10J	7.2/9.6	1/60	2 - 4.8	SINGLE	34.6/40	6	51/58	60/60
	RXBH-1724A10C	7.2/9.6	3/60	3 - 3.2	SINGLE	20/23.1	6	33/37	35/40
	RXBH-1724A13J	9.4/12.5	1/60	3 - 4.17	SINGLE	45.1/52.1	6	64/73	70/80
	RXBH-1724A13J	3.1/4.2	1/60	1 - 4.17	MULTIPLE CKT 1	15/17.4	6	27/30	30/30
	RXBH-1724A13J	6.3/8.3	1/60	2 - 4.17	MULTIPLE CKT 2	30.1/34.7	0	38/44	40/45
	RXBH-1724A15C	10.8/14.4	3/60	3 - 4.8	SINGLE	30/34.6	6	45/51	45/60
	RXBH-1724A15J	10.8/14.4	1/60	3 - 4.8	SINGLE	51.9/60	6	73/83	80/90
	RXBH-1724A15J	3.6/4.8	1/60	1 - 4.8	MULTIPLE CKT 1	17.3/20	6	30/33	30/35
	RXBH-1724A15J	7.2/9.6	1/60	2 - 4.8	MULTIPLE CKT 2	34.6/40	0	44/50	45/50
	RXBH-1724A18J	12.8/17	1/60	3 - 5.67	SINGLE	61.6/70.8	6	85/97	90/100
	RXBH-1724A18J	4.3/5.7	1/60	1 - 5.67	MULTIPLE CKT 1	20.5/23.6	6	34/38	35/40
	RXBH-1724A18J	8.5/11.3	1/60	2 - 5.67	MULTIPLE CKT 2	41.1/47.2	0	52/60	60/60
	RXBH-24A20C	14.4/19.2	3/60	6 - 3.2	SINGLE	40/46.2	6	58/66	60/70
	RXBH-24A20C	7.2/9.6	3/60	3 - 3.2	MULTIPLE CKT 1	20/23.1	6	33/37	35/40
	RXBH-24A20C	7.2/9.6	3/60	3 - 3.2	MULTIPLE CKT 2	20/23.1	0	25/29	25/30
	RXBH-24A20J	14.4/19.2	1/60	4 - 4.8	SINGLE	69.2/80	6	94/108	100/110
	RXBH-24A20J	7.2/9.6	1/60	2 - 4.8	MULTIPLE CKT 1	34.6/40	6	51/58	60/60
	RXBH-24A20J	7.2/9.6	1/60	2 - 4.8	MULTIPLE CKT 2	34.6/40	0	44/50	45/50
	RXBH-24A25C	18/24	3/60	6 - 4	SINGLE	50/57.8	6	70/80	70/80
	RXBH-24A25C	9/12	3/60	3 - 4	MULTIPLE CKT 1	25/28.9	6	39/44	40/45
	RXBH-24A25C	9/12	3/60	3 - 4	MULTIPLE CKT 2	25/28.9	0	32/37	35/40
	RXBH-24A25J	18/24	1/60	6 - 4	SINGLE	86.4/99.9	6	116/133	125/150
	RXBH-24A25J	6/8	1/60	2 - 4	MULTIPLE CKT 1	28.8/33.3	6	44/50	45/50
	RXBH-24A25J	6/8	1/60	2 - 4	MULTIPLE CKT 2	28.8/33.3	0	37/42	40/45
	RXBH-24A25J	6/8	1/60	2 - 4	MULTIPLE CKT 3	28.8/33.3	0	37/42	40/45
	RXBH-24A30C	21.6/28.8	3/60	6 - 4.8	SINGLE	60/69.4	6	83/95	90/100
	RXBH-24A30C	10.8/14.4	3/60	3 - 4.8	MULTIPLE CKT 1	30/34.7	6	45/51	45/60
	RXBH-24A30C	10.8/14.4	3/60	3 - 4.8	MULTIPLE CKT 2	30/34.7	0	38/44	40/45
	RXBH-24A30J	21.6/28.8	1/60	6 - 4.8	SINGLE	103.8/120	6	138/158	150/175
	RXBH-24A30J	7.2/9.6	1/60	2 - 4.8	MULTIPLE CKT 1	34.6/40	6	51/58	60/60
	RXBH-24A30J	7.2/9.6	1/60	2 - 4.8	MULTIPLE CKT 2	34.6/40	0	44/50	45/50
	RXBH-24A30J	7.2/9.6	1/60	2 - 4.8	MULTIPLE CKT 3	34.6/40	0	44/50	45/50

- **Supply circuit protective devices may be fuses or "HACR" type circuit breakers.**
- **Largest motor load is included in single circuit and multiple circuit 1.**
- **If non-standard fuse size is specified, use next size larger standard fuse size.**
- **J Voltage (230V) single phase air handler is designed to be used with single or three phase 230 volt electric heaters. In the case of connecting 3-phase power to the air handler terminal block without the heater, bring only two leads to the terminal block cap, insulate and fully secure the third lead.**

[ ] Designates Metric Conversions

Airflow Performance Data RH2T

Model No. RH2T	Nominal Cooling Capacity Tons	Motor Speed From Factory	Manufacturer Recommended Air-Flow Range (Min/Max) CFM	Blower Size/ Motor HP # of Speeds	Y1, Y2 Speed	Motor Speed		X-13 Wet Coil No Filter CFM Air Delivery/RPM/Watts-230 Volts									
								External Static Pressure—Inches W.C. [kPa]									
								0.1 [.02]	0.2 [.05]	0.3 [.07]	0.4 [.10]	0.5 [.12]	0.6 [.15]	0.7 [.17]	0.8 [.20]	0.9 [.22]	1.0 [.25]
2421MT No Heater	2.0	Y1 Tap 4 Y2 Tap 5	Y1=310/817 CFM [146/385] L/s Y2=445/951 CFM [210/448] L/s	10X8 3/4 hp 5 speed	Y1 Low Static	Tap 2	CFM	740	569	310	—	—	—	—	—	—	—
							RPM	542	561	584	—	—	—	—	—	—	—
							Watts	94	72	49	—	—	—	—	—	—	—
					Y2 Low Static	Tap 3	CFM	851	704	653	590	541	489	445	—	—	—
							RPM	578	599	647	711	770	814	868	—	—	—
							Watts	88	93	98	103	108	113	118	—	—	—
					Y1 High Static	Tap 4	CFM	817	699	574	515	—	—	—	—	—	—
							RPM	573	588	630	702	—	—	—	—	—	—
							Watts	97	88	78	69	—	—	—	—	—	—
					Y2 High Static	Tap 5	CFM	951	911	872	824	787	742	691	—	—	—
							RPM	622	672	725	772	821	880	922	—	—	—
							Watts	134	146	157	168	179	191	202	—	—	—
2421MT With 13 kW Heater	2.0	Y1 Tap 4 Y2 Tap 5	Y1=290/797 CFM [136/376] L/s Y2=425/931 CFM [200/439] L/s	10X8 3/4 hp 5 speed	Y1 Low Static	Tap 2	CFM	720	549	290	—	—	—	—	—	—	—
							RPM	557	576	599	—	—	—	—	—	—	—
							Watts	99	77	54	—	—	—	—	—	—	—
					Y2 Low Static	Tap 3	CFM	831	684	633	570	521	469	425	—	—	—
							RPM	593	614	662	726	785	829	883	—	—	—
							Watts	93	98	103	108	113	118	123	—	—	—
					Y1 High Static	Tap 4	CFM	797	679	554	495	—	—	—	—	—	—
							RPM	588	603	645	717	—	—	—	—	—	—
							Watts	102	93	83	74	—	—	—	—	—	—
					Y2 High Static	Tap 5	CFM	931	891	852	804	767	722	671	—	—	—
							RPM	637	687	740	787	836	895	937	—	—	—
							Watts	139	151	162	173	184	196	207	—	—	—

Notes: Constant Torque (ECM) motor speed changes.
All Constant Torque (ECM) motors have 5 speed tabs. Speed tab 1 is for continuous fan. Speed tab 2 (low static) and Speed tab 3 (high static) are for lower tonnage. Speed tab 4 (low static) and Speed tab 5 (high static) are for higher tonnage.
Constant Torque air handlers are always shipped from factory at Speed tab 5, except for -4824, which is set at Speed tab 3. For instance, (-)H2T is always shipped at high static 2-ton airflow (Speed tab 5). To change to 1.5-ton airflow, move the blue wire to Speed tab 2 or 3 on the Constant Torque (ECM) motor.
The low static Speed tab 2 (lower tonnage) and 4 (higher tonnage) are used for external static below 0.5" WC. The high static Speed tab 3 (lower tonnage) and 5 (higher tonnage) are used for external static exceeding 0.5" WC. Move the blue wire to the appropriate Speed tab as required by the application needs.

- The airflow for continuous fan (Speed tab 1) is always set at 50% of the Speed tab 4.
- The above airflow table lists the airflow information for air handlers without heater and air handler with maximum heater allowed for each model.
- The following formula can be used to calculate the approximate airflow, if a smaller (N kW) than the maximum heater kit is installed.
  Approximate Airflow = Airflow without heater – (Airflow without heater – Airflow with maximum heater) x (N kW/maximum heater kW)

[ ] Designates Metric Conversions

Airflow Performance Data RH2T

Model No. RH2T	Nominal Cooling Capacity Tons	Motor Speed From Factory	Manufacturer Recommended Air-Flow Range (Min/Max) CFM	Blower Size/ Motor HP # of Speeds	Y1, Y2 Speed	Motor Speed		X-13 Wet Coil No Filter CFM Air Delivery/RPM/Watts-230 Volts									
								External Static Pressure—Inches W.C. [kPa]									
								0.1 [.02]	0.2 [.05]	0.3 [.07]	0.4 [.10]	0.5 [.12]	0.6 [.15]	0.7 [.17]	0.8 [.20]	0.9 [.22]	1.0 [.25]
3621MT No Heater	3.0	Y1 Tap 4 Y2 Tap 5	Y1=434/1005 CFM [204/474] L/s Y2=703/1328 CFM [331/626] L/s	10X10 3/4 Hp 5 speed	Y1 Low Static	Tap 2	CFM	919	757	596	434	—	—	—	—	—	—
							RPM	567	584	635	691	—	—	—	—	—	—
							Watts	83	79	75	71	67	62	58	54	—	—
					Y2 Low Static	Tap 3	CFM	1128	1067	1007	946	885	824	764	703	—	—
							RPM	644	691	728	804	884	921	945	986	—	—
							Watts	131	142	153	164	175	187	—	—	—	—
					Y1 High Static	Tap 4	CFM	1005	942	879	816	753	690	—	—	—	—
							RPM	597	645	700	790	830	868	—	—	—	—
							Watts	99	108	117	127	136	145	154	164	173	182
					Y2 High Static	Tap 5	CFM	1328	1273	1218	1164	1109	1055	1000	945	891	836
							RPM	737	773	815	854	907	990	1040	1065	1085	1117
							Watts	197	209	221	233	245	257	269	281	293	305
3621MT With 18 kW Heater	3.0	Y1 Tap 4 Y2 Tap 5	Y1=404/975 CFM [190/460] L/s Y2=673/1298 CFM [317/612] L/s	10X10 3/4 Hp 5 speed	Y1 Low Static	Tap 2	CFM	889	727	566	404	—	—	—	—	—	—
							RPM	592	609	660	716	—	—	—	—	—	—
							Watts	88	84	80	76	—	—	—	—	—	—
					Y2 Low Static	Tap 3	CFM	1098	1037	977	916	855	794	734	673	—	—
							RPM	669	716	753	829	909	946	970	1011	—	—
							Watts	136	147	158	169	180	192	5	5	—	—
					Y1 High Static	Tap 4	CFM	975	912	849	786	723	660	—	—	—	—
							RPM	622	670	725	815	855	893	—	—	—	—
							Watts	104	113	122	132	141	150	—	—	—	—
					Y2 High Static	Tap 5	CFM	1298	1243	1188	1134	1079	1025	970	915	861	806
							RPM	762	798	840	879	932	1015	1065	1090	1110	1142
							Watts	202	214	226	238	250	262	274	286	298	—

Notes: Constant Torque (ECM) motor speed changes.
All Constant Torque (ECM) motors have 5 speed tabs. Speed tab 1 is for continuous fan. Speed tab 2 (low static) and Speed tab 3 (high static) are for lower tonnage. Speed tab 4 (low static) and Speed tab 5 (high static) are for higher tonnage.
Constant Torque air handlers are always shipped from factory at Speed tab 5, except for -4824, which is set at Speed tab 3. For instance, (-)H2T is always shipped at high static 2-ton airflow (Speed tab 5). To change to 1.5-ton airflow, move the blue wire to Speed tab 2 or 3 on the Constant Torque (ECM) motor.
The low static Speed tab 2 (lower tonnage) and 4 (higher tonnage) are used for external static below 0.5" WC. The high static Speed tab 3 (lower tonnage) and 5 (higher tonnage) are used for external static exceeding 0.5" WC. Move the blue wire to the appropriate Speed tab as required by the application needs.

- The airflow for continuous fan (Speed tab 1) is always set at 50% of the Speed tab 4.
- The above airflow table lists the airflow information for air handlers without heater and air handler with maximum heater allowed for each model.
- The following formula can be used to calculate the approximate airflow, if a smaller (N kW) than the maximum heater kit is installed.
  Approximate Airflow = Airflow without heater – (Airflow without heater – Airflow with maximum heater) x (N kW/maximum heater kW)

[ ] Designates Metric Conversions

Airflow Performance Data RH2T

Model No. RH2T	Nominal Cooling Capacity Tons	Motor Speed From Factory	Manufacturer Recommended Air-Flow Range (Min/Max) CFM	Blower Size/ Motor HP # of Speeds	Y1, Y2 Speed	Motor Speed		X-13 Wet Coil No Filter CFM Air Delivery/RPM/Watts-230 Volts									
								External Static Pressure—Inches W.C. [kPa]									
								0.1 [.02]	0.2 [.05]	0.3 [.07]	0.4 [.10]	0.5 [.12]	0.6 [.15]	0.7 [.17]	0.8 [.20]	0.9 [.22]	1.0 [.25]
4824MT No Heater	4.0	Y1 Tap 4 Y2 Tap 5	Y1=702/1271 CFM [331/599] L/s Y2=992/1673 CFM [468/789] L/s	11X11 3/4 hp 5 speed	Y1 Low Static	Tap 2	CFM	1196	1046	894	819	702	—	—	—	—	—
							RPM	563	580	598	643	696	—	—	—	—	—
							Watts	133	133	134	135	136	—	—	—	—	—
					Y2 Low Static	Tap 3	CFM	1517	1461	1405	1347	1297	1247	1195	1144	1068	992
							RPM	670	704	735	767	799	832	867	894	940	984
							Watts	251	265	277	287	296	310	322	335	351	365
					Y1 High Static	Tap 4	CFM	1271	1151	1095	1039	968	883	813	745	—	—
							RPM	586	610	650	691	723	774	812	841	—	—
							Watts	164	157	168	180	186	198	211	219	—	—
					Y2 High Static	Tap 5	CFM	1673	1625	1576	1527	1476	1431	1381	1339	1289	1239
							RPM	726	756	783	815	841	870	901	929	956	983
							Watts	329	341	355	370	378	389	405	415	427	441
4824MT With 25 kW Heater	4.0	Y1 Tap 4 Y2 Tap 5	Y1=672/1241 CFM [314/582] L/s Y2=962/1643 CFM [451/772] L/s	11X11 3/4 hp 5 speed	Y1 Low Static	Tap 2	CFM	1166	1016	864	789	672	—	—	—	—	—
							RPM	588	605	623	668	721	—	—	—	—	—
							Watts	138	138	139	140	141	—	—	—	—	—
					Y2 Low Static	Tap 3	CFM	1487	1431	1375	1317	1267	1217	1165	1114	1038	962
							RPM	695	729	760	792	824	857	892	919	965	1009
							Watts	256	270	282	292	301	315	327	340	356	370
					Y1 High Static	Tap 4	CFM	1241	1121	1065	1009	938	853	783	715	—	—
							RPM	611	635	675	716	748	799	837	866	—	—
							Watts	169	162	173	185	191	203	216	224	—	—
					Y2 High Static	Tap 5	CFM	1643	1595	1546	1497	1446	1401	1351	1309	1259	1209
							RPM	751	781	808	840	866	895	926	954	981	1008
							Watts	334	346	360	375	383	394	410	420	432	446

Notes: Constant Torque (ECM) motor speed changes.
All Constant Torque (ECM) motors have 5 speed tabs. Speed tab 1 is for continuous fan. Speed tab 2 (low static) and Speed tab 3 (high static) are for lower tonnage. Speed tab 4 (low static) and Speed tab 5 (high static) are for higher tonnage.
Constant Torque air handlers are always shipped from factory at Speed tab 5, except for -4824, which is set at Speed tab 3. For instance, (-)H2T is always shipped at high static 2-ton airflow (Speed tab 5). To change to 1.5-ton airflow, move the blue wire to Speed tab 2 or 3 on the Constant Torque (ECM) motor.
The low static Speed tab 2 (lower tonnage) and 4 (higher tonnage) are used for external static below 0.5" WC. The high static Speed tab 3 (lower tonnage) and 5 (higher tonnage) are used for external static exceeding 0.5" WC. Move the blue wire to the appropriate Speed tab as required by the application needs.

- The airflow for continuous fan (Speed tab 1) is always set at 50% of the Speed tab 4.
- The above airflow table lists the airflow information for air handlers without heater and air handler with maximum heater allowed for each model.
- The following formula can be used to calculate the approximate airflow, if a smaller (N kW) than the maximum heater kit is installed.
  Approximate Airflow = Airflow without heater – (Airflow without heater – Airflow with maximum heater) x (N kW/maximum heater kW)

[ ] Designates Metric Conversions

Airflow Performance Data RH2T

Model No. RH2T	Nominal Cooling Capacity Tons	Motor Speed From Factory	Manufacturer Recommended Air-Flow Range (Min/Max) CFM	Blower Size/ Motor HP # of Speeds	Y1, Y2 Speed	Motor Speed		X-13 Wet Coil No Filter CFM Air Delivery/RPM/Watts-230 Volts									
								External Static Pressure—Inches W.C. [kPa]									
								0.1 [.02]	0.2 [.05]	0.3 [.07]	0.4 [.10]	0.5 [.12]	0.6 [.15]	0.7 [.17]	0.8 [.20]	0.9 [.22]	1.0 [.25]
6024ST No Heater	5.0	Y1 Tap 4 Y2 Tap 5	Y1=785/1350 CFM [370/637] L/s Y2=1249/1844 CFM [589/870] L/s	11X11 3/4 hp 5 speed	Y1 Low Static	Tap 2	CFM	1280	1196	1134	1080	1011	945	880	785	—	—
							RPM	591	620	665	710	742	781	818	853	—	—
							Watts	165	170	175	192	200	209	220	231	—	—
					Y2 Low Static	Tap 3	CFM	1686	1632	1586	1538	1491	1447	1400	1352	1298	1249
							RPM	733	770	801	830	863	891	922	953	982	1008
							Watts	334	355	362	370	387	394	411	424	438	450
					Y1 High Static	Tap 4	CFM	1350	1296	1240	1188	1130	1067	1002	931	849	—
							RPM	612	654	695	734	772	811	840	874	908	—
							Watts	179	198	205	225	236	242	253	260	276	—
					Y2 High Static	Tap 5	CFM	1844	1796	1753	1702	1655	1612	1566	1520	1478	1429
							RPM	794	823	852	880	908	938	968	997	1020	1044
							Watts	434	448	460	470	490	502	512	530	540	553
6024ST With 30 kW Heater	5.0	Y1 Tap 4 Y2 Tap 5	Y1=745/1310 CFM [353/620] L/s Y2=1209/1804 CFM [570/851] L/s	11X11 3/4 hp 5 speed	Y1 Low Static	Tap 2	CFM	1240	1156	1094	1040	971	905	840	745	—	—
							RPM	621	650	695	740	772	811	848	883	—	—
							Watts	170	175	180	197	205	214	225	236	—	—
					Y2 Low Static	Tap 3	CFM	1646	1592	1546	1498	1451	1407	1360	1312	1258	1209
							RPM	763	800	831	860	893	921	952	983	1012	1038
							Watts	339	360	367	375	392	399	416	429	443	455
					Y1 High Static	Tap 4	CFM	1310	1256	1200	1148	1090	1027	962	891	809	—
							RPM	642	684	725	764	802	841	870	904	938	—
							Watts	184	203	210	230	241	247	258	265	281	—
					Y2 High Static	Tap 5	CFM	1804	1756	1713	1662	1615	1572	1526	1480	1438	1389
							RPM	824	853	882	910	938	968	998	1027	1050	1074
							Watts	439	453	465	475	495	507	517	535	545	558

Electrical Data – Blower Motor Only – No Electric Heat RH2T

Model RH2T	Voltage	Phase*	Hertz	HP	RPM	Speeds	Circuit Amps.	Minimum Circuit Ampacity	Maximum Circuit Protector
2421MT	208/240	1 & 3	60	1/3	300-1100	4	1.6	2	15
3621MT				3/4	300-1100	4	3.8	5	15
6024ST/4824MT				3/4	300-1100	4	4.6	6	15

* Blower motors are all single phase motors.

Electrical Data – With Electric Heat

Installation of the U.L. Listed original equipment manufacturer provided heater kits listed in the following table is recommended for all auxiliary heating requirements.

Air Handler Model RH2T	Heater Model No.	Heater kW (208/240V) (480V)	Ph/Hz	No. Elements - kW Per	Type Supply Circuit Single Circuit Multiple Circuit	Circuit Amps.	Motor Ampacity	Minimum Circuit Ampacity	Maximum Circuit Protector
2421MT	RXBH-1724?03J	2.25/3.0	1/60	1-3.0	SINGLE	10.8/12.51.6	1.6	16/18	20/20
	RXBH-1724?05J	3.6/4.8	1/60	1-4.8	SINGLE	17.3/20.0	1.6	24/27	25/30
	RXBH-1724?07J	5.4/7.2	1/60	2-3.6	SINGLE	26.0/30.0	1.6	35/40	35/40
	RXBH-1724?10J	7.2/9.6	1/60	2-4.8	SINGLE	34.6/40.0	1.6	46/52	50/60
	RXBH-1724A13J	9.4/12.5	1/60	3-4.17	SINGLE	45.1/52.1	1.6	59/68	60/70
	RXBH-1724A13J	3.1/4.2	1/60	1-4.17	MULTIPLE CKT 1	15.0/17.4	1.6	21/24	25/25
		6.3/8.3	1/60	2-4.17	MULTIPLE CKT 2	30.1/34.7	0	38/44	40/45
	RXBH-1724A10C	7.2/9.6	3/60	3-3.2	SINGLE	20.0/23.1	1.6	27/31	30/35
3621MT	RXBH-1724?05J	3.6/4.8	1/60	1-4.8	SINGLE	17.3/20.0	3.8	27/30	30/30
	RXBH-1724?07J	5.4/7.2	1/60	2-3.6	SINGLE	26.0/30.0	3.8	38/43	40/45
	RXBH-1724?10J	7.2/9.6	1/60	2-4.8	SINGLE	34.6/40.0	3.8	48/55	50/60
	RXBH-1724A15J	10.8/14.4	1/60	3-4.8	SINGLE	51.9/60.0	3.8	70/80	70/80
	RXBH-1724A15J	3.6/4.8	1/60	1-4.8	MULTIPLE CKT 1	17.3/20.0	3.8	27/30	30/30
		7.2/9.6	1/60	2-4.8	MULTIPLE CKT 2	34.6/40.0	0.0	44/50	45/50
	RXBH-1724A18J	12.8/17.0	1/60	4-4.26	SINGLE	61.6-70.8	3.8	82/94	90/100
	RXBH-1724A18J	6.4/8.5	1/60	2-4.26	MULTIPLE CKT 1	30.8/35.4	3.8	44/49	45/50
		6.4/8.5	1/60	2-4.26	MULTIPLE CKT 2	30.8/35.4	0.0	39/45	40/45
	RXBH-1724A10C	7.2/9.6	3/60	3-3.2	SINGLE	20.0/23.1	3.8	30/34	30/35
	RXBH-1724A15C	10.8/14.4	3/60	3-4.8	SINGLE	30.0/34.6	3.8	43/48	45/50
	RXBH-1724B05J	3.6/4.8	1/60	1-4.8	SINGLE	17.3/20.0	3.8	27/30	30/30
	RXBH-1724B07J	5.4/7.2	1/60	2-3.6	SINGLE	26.0/30.0	3.8	38/43	40/45
	RXBH-1724B10J	7.2/9.6	1/60	2-4.8	SINGLE	34.6/40.0	3.8	48/55	60/60

- ? Heater Kit Connection Type A = Breaker B = Terminal Block C = Pullout Disconnect

① D Voltage = 480 Volts.

*Values only. No single point kit available.

NOTES:

- Electric heater BTUH - (heater watts + motor watts) x 3.414 (see airflow table for motor watts.)
- Supply circuit protective devices may be fuses or "HACR" type circuit breakers.
- If non-standard fuse size is specified, use next size larger standard fuse size.
- Largest motor load is included in single circuit or circuit 1 of multiple circuits.
- Heater loads are balanced on 3 phase models with 3 or 6 heaters only.
- No electrical heating elements are permitted to be used with A voltage (115V) air handler.
- J voltage (208/240V) single phase air handler is designed to be used with single or three phase 208/240V volt electric heaters. In the case of connecting 3 phase power to air handler terminal block without the heater, bring only two leads to terminal block, cap, insulate and fully secure the third lead.
- Do not use 480V electrical heaters on 208/240V air handlers.
- If the kit is listed under both single and multiple circuits, the kit is shipped from factory as multiple circuits. For single phase application, Jumper bar kit RXBJ-A21 and RXBJ-A31 can be used to convert multiple circuits to a single supply circuit. Refer to Accessory Section for details.

[ ] Designates Metric Conversions

Electrical Data – With Electric Heat RH2T

Installation of the U.L. Listed original equipment manufacturer provided heater kits listed in the following table is recommended for all auxiliary heating requirements.

Air Handler Model RH2T	Heater Model No.	Heater kW (208/240V) (480V)	Ph/Hz	No. Elements - kW Per	Type Supply Circuit Single Circuit Multiple Circuit	Circuit Amps.	Motor Ampacity	Minimum Circuit Ampacity	Maximum Circuit Protector
4824MT/ 6024ST	RXBH-1724?07J	5.4/7.2	1/60	2-3.6	SINGLE	26.0/30.0	4.6	39/44	40/45
	RXBH-1724?10J	7.2/9.6	1/60	2-4.8	SINGLE	34.6/40.0	4.6	49/56	50/60
	RXBH-1724A15J	10.8/14.4	1/60	3-4.8	SINGLE	51.9/60.0	4.6	71/81	80/90
	RXBH-1724A15J	3.6/4.8	1/60	1-4.8	MULTIPLE CKT 1	17.3/20.0	4.6	28/31	30/35
		7.2/9.6	1/60	2-4.8	MULTIPLE CKT 2	34.6/40.0	0	44/50	45/50
	RXBH-1724A18J	12.8/17	1/60	4-4.26	SINGLE	61.8/70.8	4.6	83/95	90/100
	RXBH-1724A18J	6.4/8.5	1/60	2-4.26	MULTIPLE CKT 1	30.8/35.4	4.6	45/50	45/50
		6.4/8.5	1/60	2-4.6	MULTIPLE CKT 2	30.8/35.4	0	39/45	40/45
	RXBH-24A20J	14.4/19.2	1/60	4-4.8	SINGLE	69.2/80	4.6	93/106	100/110
	RXBH-24A20J	7.2/9.6	1/60	2-4.8	MULTIPLE CKT 1	34.6/40.0	4.6	49/56	50/60
		7.2/9.6	1/60	2-4.8	MULTIPLE CKT 2	34.6/40.0	0	44/50	45/50
	RXBH-24A25J	18.0/24.0	1/60	6-4.0	SINGLE	86.4/99.9	4.6	114/131	125/150
	RXBH-24A25J	6.0/8.0	1/60	2-4.0	MULTIPLE CKT 1	28.8/33.3	4.6	42/48	45/50
		6.0/8.0	1/60	2-4.0	MULTIPLE CKT 2	28.8/33.3	0	36/42	40/45
		6.0/8.0	1/60	2-4.0	MULTIPLE CKT 3	28.8/33.3	0	36/42	40/45
	RXBH-24A30J (5-ton only)	21.6/28.8	1/60	6-4.8	SINGLE	103.8/120	4.6	136/156	150/175
	RXBH-24A30J (5-ton only)	7.2/9.6	1/60	2-4.8	MULTIPLE CKT 1	34.6/40.0	4.6	49/56	56/60
		7.2/9.6	1/60	2-4.8	MULTIPLE CKT 2	34.6/40.0	0	44/50	56/60
		7.2/9.6	1/60	2-4.8	MULTIPLE CKT 3	34.6/40.0	0	44/50	56/60
	RXBH-1724A10C	7.2/9.6	3/60	3-3.2	SINGLE	20.0/23.1	4.6	31/35	35/35
	RXBH-1724A15C	10.8/14.4	3/60	3-4.8	SINGLE	30.0/34.6	4.6	44/49	45/50
	RXBH-24A20C*	14.4/19.2	3/60	3-3.2	SINGLE	40.0-46.2	4.6	56/64	60/70
	RXBH-24A20C	7.2/9.6	3/60	3-3.2	MULTIPLE CKT 1	20.0/23.1	4.6	31/35	35/35
		7.2/9.6	3/60	3-3.2	MULTIPLE CKT 2	20.0/23.1	0	25/29	25/30
	RXBH-24A25C*	18.0/24.0	3/60	6-4.0	SINGLE	50.0/57.8	4.6	69/78	70/80
	RXBH-24A25C	9.0/12.0	3/60	3-4.0	MULTIPLE CKT 1	25.0/28.9	4.6	37/42	40/45
		9.0/12.0	3/60	3-4.0	MULTIPLE CKT 2	25.0/28.9	0	32/37	35/40
	RXBH-24A30C* (5-ton only)	21.6/28.8	3/60	6-4.8	SINGLE	60.0/69.4	4.6	81/93	90/100
	RXBH-24A30C (5-ton only)	10.8/14.4	3/60	3-4.8	MULTIPLE CKT 1	30.0/34.7	4.6	44/50	45/50
		10.8/14.4	3/60	3-4.8	MULTIPLE CKT 2	30.0/34.7	0	38/44	40/45

- ? Heater Kit Connection Type A = Breaker B = Terminal Block C = Pullout Disconnect

① D Voltage = 480 Volts.

*Values only. No single point kit available.

NOTES:

- Electric heater BTUH - (heater watts + motor watts) x 3.414 (see airflow table for motor watts.)
- Supply circuit protective devices may be fuses or "HACR" type circuit breakers.
- If non-standard fuse size is specified, use next size larger standard fuse size.
- Largest motor load is included in single circuit or circuit 1 of multiple circuits.
- Heater loads are balanced on 3 phase models with 3 or 6 heaters only.
- No electrical heating elements are permitted to be used with A voltage (115V) air handler.
- J voltage (208/240V) single phase air handler is designed to be used with single or three phase 208/240V volt electric heaters. In the case of connecting 3 phase power to air handler terminal block without the heater, bring only two leads to terminal block, cap, insulate and fully secure the third lead.
- Do not use 480V electrical heaters on 208/240V air handlers.
- If the kit is listed under both single and multiple circuits, the kit is shipped from factory as multiple circuits. For single phase application, Jumper bar kit RXBJ-A21 and RXBJ-A31 can be used to convert multiple circuits to a single supply circuit. Refer to Accessory Section for details.

[ ] Designates Metric Conversions

Electrical Wiring

Power Wiring

- Field wiring must comply with the National Electrical Code (C.E.C. in Canada) and any applicable local ordinance.
- Supply wiring must be 75°C minimum copper conductors only.
- See electrical data for product Ampacity rating and Circuit Protector requirement.

Grounding

- This product must be sufficiently grounded in accordance with National Electrical Code (C.E.C. in Canada) and any applicable local ordinance.
- A grounding lug is provided.

Accessories

- **Combustible Floor Base RXHB-**

Model Cabinet Size	Combustible Floor Base Model Number
17	RXHB-17
21	RXHB-21
24	RXHB-24

- **Jumper Bar Kit 3 Ckt. to 1 Ckt. RXBJ-A31** is used to convert single phase multiple three circuit units to a single supply circuit. Kit includes cover and screw for line side terminals.
- **Jumper Bar Kit 2 Ckt. to 1 Ckt. RXBJ-A21** is used to convert single phase multiple two circuit units to a single supply circuit. Kit includes cover and screw for line side terminals.
- **Note:** No jumper bar kit is available to convert three phase multiple two circuit units to a single supply circuit.

- **Auxiliary Horizontal Overflow Pan Accessory RXBM-**

Nominal Cooling Capacity-Tons	Auxiliary Horizontal Overflow Pan Accessory Model Number
1 1/2 - 3	RXBM-AC48
3 1/2 - 5	RXBM-AC61

- **External Filter Rack RXHF-B17, B21, B24**

Model Cabinet Size	Filter Size In. [mm]	Part Number*	A	B
17	16 x 20 [406 x 508]	RXHF-B17	16.90	20.77
21	20 x 20 [508 x 508]	RXHF-B21	20.40	20.77
24	25 x 20 [635 x 508]	RXHF-B24	25.00	21.04

*Accommodates 1" filter

[ ] Designates Metric Conversions

- **Auxiliary Electric Heater Kits RXBH-**
  Heater Kits include circuit breakers which meet UL and cUL requirements for service disconnect. See the Electric Heat Electrical Data in this specification sheet for specific Heater Kit Model numbers.

- **External Filter Base RXHF-**

Model Cabinet Size	Filter Size In. [mm]	Part Number*	A	B
21	20 x 20 [508 x 508]	RXHF-21	19.20	21.0
24	25 x 20 [635 x 508]	RXHF-24	22.70	25.5

*Accommodates 1" or 2" filter

- **Horizontal Adapter Kit RXHH-**
  This horizontal adapter kit is used to convert Upflow/Downflow only models to horizontal flow. See the following table to order proper horizontal adapter kit.

Coil Model	Horizontal Adapter Kit Model Number (Single Qty.)	Horizontal Adapter Kit Model Number (10-Pack Qty.)
2414	RXHH-A01	RXHH-A01 x 10
2417	RXHH-A02	RXHH-A02 x 10
3617/3621	RXHH-A03	RXHH-A03 x 10
3821/4821/4824	RXHH-A04	RXHH-A04 x 10
6024	RXHH-A05	RXHH-A05 x 10

- **External Filter Base RXHF-**

Model Cabinet Size	Filter Size In. [mm]	Part Number*	A	B
17	16 x 20 [406 x 508]	RXHF-17	15.70	17.5
21	20 x 20 [508 x 508]	RXHF-21	19.20	21.0
24	25 x 20 [635 x 508]	RXHF-24	22.70	25.5

*Accommodates 1" or 2" filter

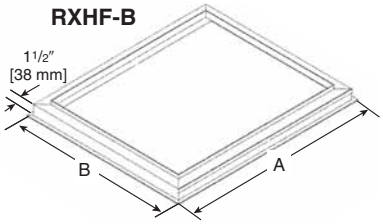

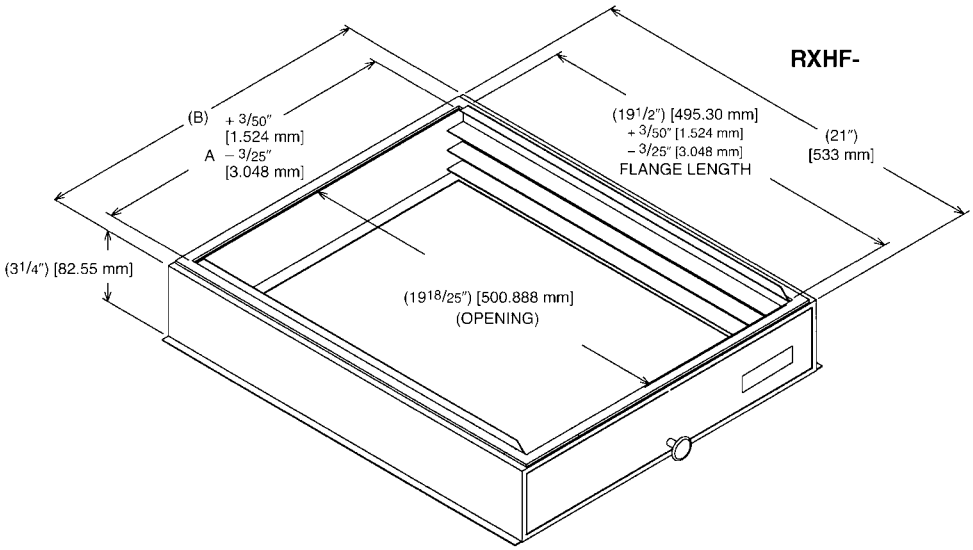

GENERAL TERMS OF LIMITED WARRANTY*

Rheem will furnish a replacement for any part of this product which fails in normal use and service within the applicable periods stated, in accordance with the terms of the limited warranty.

Conditional Parts (Registration Required) .....Ten (10) Years

***For complete details of the Limited and Conditional Warranties, including applicable terms and conditions, contact your local contractor or the Manufacturer for a copy of the product warranty certificate.**

The new degree of comfort.™

In keeping with its policy of continuous progress and product improvement, Rheem reserves the right to make changes without notice.

Rheem Heating, Cooling & Water Heating • P.O. Box 17010
Fort Smith, Arkansas 72917 • www.rheem.com

Rheem Canada Ltd./Ltée • 125 Edgeware Road, Unit 1
Brampton, Ontario • L6Y 0P5

INTEGRATED HOME COMFORT

PRINTED IN U.S.A. 10/16 QG FORM NO. H11-553 REV. 4