ROYAL 152 ESS-1.28-OR-2-10-3/4-LDIM-HW

CODE NUMBER

3451648

DESCRIPTION

1.28 gpf, Rough Brass Finish, Rear Spud, Single Flush, 2-10.75 L Dimension, Electrical Override, Hardwired, Sensor-Operated, Royal® Concealed Sensor Hardwired Water Closet Flushometer.

DETAILS

- Flush Volume: 1.28 gpf (4.8 Lpf)
- Finish: Rough Brass (RB)
- Power Type: Hardwired (HW)
- Valve: Diaphragm
- Valve Body Material: Semi-red Brass
- Fixture Type: Water Closet
- Fixture Connection: Rear Spud
- Rough-In Dimension: 24" (610mm)
- Spud Coupling: 1 ½" (38mm)
- Supply Pipe: 1" (25mm)
- L Dimension: 2"–10 ¾" (51–273mm) (2-10-3/4-LDIM)
- Override: Electrical (OR)

FEATURES

- PERMEX® Synthetic Rubber Diaphragm with Dual Filtered Fixed Bypass
- User friendly three (3) second Flush Delay
- OPTIMA® EL-1500 Self-Adaptive Infrared Sensor with Indicator Light
- Die Cast Sensor Plate with no visible Fasteners (for 2-gang Electrical Box)
- Non-Hold-Open Integral Solenoid Operator, Fixed Metering Bypass and No External Volume Adjustment to Ensure Water Conservation
- Stop Seat and Vacuum Breaker molded from PERMEX® Rubber Compound for Chloramine Resistance
- High Back Pressure Vacuum Breaker Flush Connection and Spud Coupling for 1 1/2" Concealed Back Spud
- 1" I.P.S. Wheel Handle Bak-Chek® Angle Stop
- Courtesy Flush® Override Button

VIDEOS

ESS Flushometer



COMPLIANCES & CERTIFICATIONS

(ADA Compliant, BAA Compliant, BREEAM Water Credit, cUPC Certified, cUPC Green Certified, Green Globes Water Credit, LEED V4 Water Efficiency Credit, Satisfies LEED Credits, UL Certified, WaterSense Listed)

RECOMMENDED SPECIFICATION

Valve Body, Cover, Tailpiece and Control Stop shall be in conformance with ASTM Alloy Classification for Semi- Red Brass. Valve shall be in compliance with the applicable sections of ASSE 1037 and ANSI/ASME 112.19.2.

ELECTRICAL SPECIFICATIONS

- Arming Delay: 16 seconds
- Control Circuit: Solid State/24 VAC Input/24 VAC Output
- Flush Delay: 3s
- Self-Adaptive Window: ±10
- Sensor Range: 22"–42" (559–1,067mm)
- Solenoid Operator: 24 VAC
- Transformers:
  - 0345154
  - 0345999

VALVE OPERATING PRESSURE (FLOWING)

15–80 PSI (103–552 kPa). Specific fixtures may require greater minimum flowing pressure - consult manufacturer requirements.

DOWNLOADS

- Royal/Sloan/Crown SWB ESS Installation Instructions
- Royal ESS Concealed and Exposed Installation Instructions
- Royal 152/195 ESS TMO Concealed Installation Instructions
- 150/152/190/194/195 ES-SM Installation Instructions
- Royal ESS Concealed with Wall Box Installation Instructions
- Control Stop Repair and Maintenance Guide

Sloan 10500 Seymour Ave, Franklin Park, IL 60131
Phone: 800.982.5839 • Fax: 800.447.8329 • sloan.com

- Flush Connections Flanges Repair and Maintenance Guide
- Tail Piece Repair and Maintenance Guide
- Optima ESS Repair and Maintenance Guide
- ESS TMO SWB Repair and Maintenance Guide
- Additional Downloads

NOTES

All information contained within this document subject to change without notice.

Looking for other variations of the ROYAL 152 ESS product? View the general spec sheet with all options.

Find a compatible urinal for this flushometer.
Find a compatible water closet for this flushometer.

WaterSense compliant when used with a WaterSense compliant fixture

ROUGH-IN

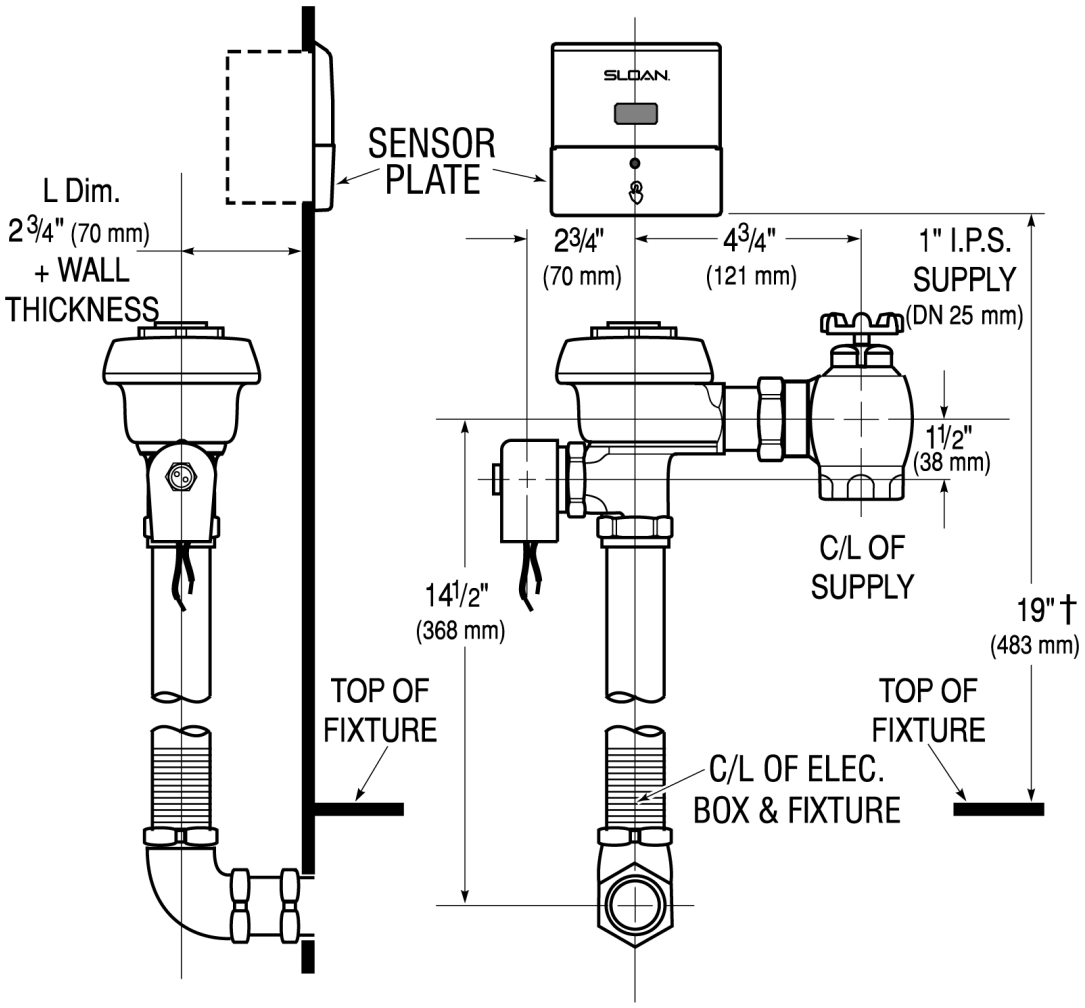

Sloan 10500 Seymour Ave, Franklin Park, IL 60131
Phone: 800.982.5839 • Fax: 800.447.8329 • sloan.com