StyleTherm™

TH52- R

½" Thermostatic Valve with Dual Volume Control Rough

Installation Instructions

CALIFORNIA FAUCETS RECOMMENDS THAT ALL PLUMBING PRODUCTS BE INSTALLED BY A LICENSED PROFESSIONAL

IMPORTANT: Read all instructions prior to installation and provide copy of instructions to consumer.

WARNING: This valve is factory set to deliver water at 100°F; however, it is the installer's responsibility to verify correct temperature setting to prevent risk on scalding or other severe injury prior to consumer use. The installer is responsible for adjusting maximum temperature setting according to Thermostatic Rough and Thermostatic Trim Installation Instructions.

WARNING: To prevent possible injury and/or flood damage, the valve's CARTRIDGE NUT must always be tightened to the factory torque setting of 10lb.-ft. (13.6 Nm)

Operating Specifications:

Recommended Supply Pressure:	20 to 70 psi *†
Recommended Hot Water Supply Temperature:	120 to 140°F ‡
Nominal Flow Rate @ 60 psi:	10 gpm

* Operating pressures between hot and cold supplies should vary no more than 30 psi.
† If water pressure exceeds 70 psi, install a Pressure-Reducing Valve (RPV).
‡ Follow all applicable local plumbing codes when setting the temperature on the water heater.

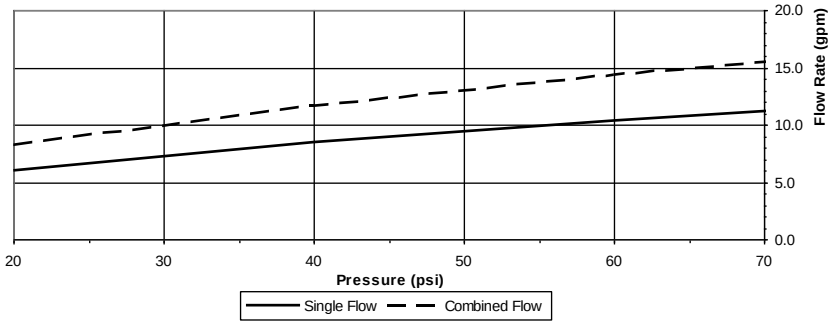

California Faucets®

1 INSTALLING VALVE TO FRAME

- Determine the desired location for the valve, construct suitable stud, and support framing
- Attach VALVE **(1)** to CROSS SUPPORT **(2)** by using SCREWS **(3)** (not supplied) as shown
- The valve should be level in HORIZONTAL, VERTICAL and PARALLEL to wall
- Placement of VALVE **(1)** and CROSS SUPPORT **(2)** within the wall shall be determined by the MIN/MAX Limits shown on MUDGUARD **(4)**
- For complete detailed VALVE **(1)** dimensions see **5 ROUGH-IN DIMENSIONS**

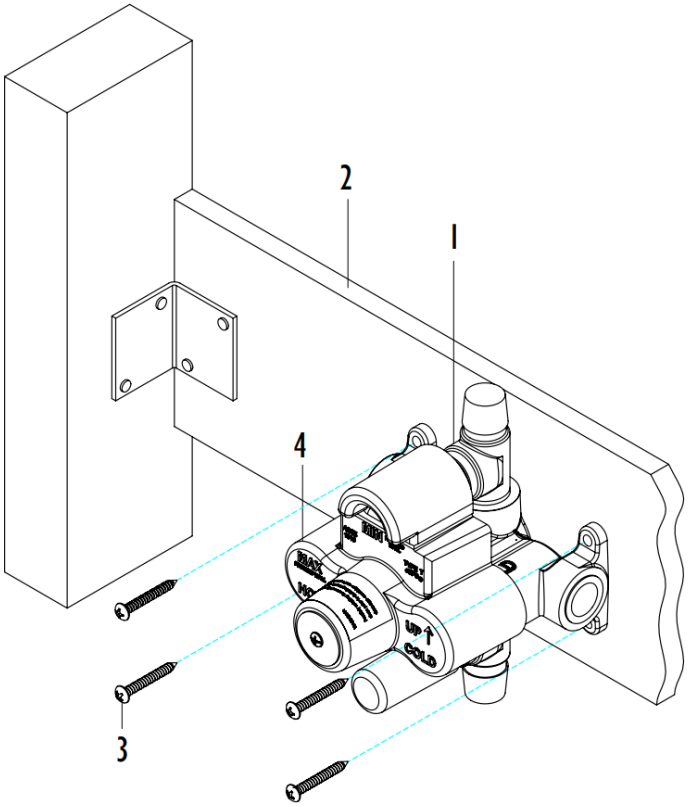

2 WATER CONNECTIONS

- Remove and discard THREAD PROTECTORS **(5)**
- Pre-assemble FITTINGS **(6)** prior to attaching to VALVE **(1)**
- Apply thread sealant to all FITTING **(6)** threads and attach to VALVE **(1)**
- Attach **"COLD"** INLET to COLD SUPPLY and **"HOT"** INLET to HOT SUPPLY. **All soldering of FITTINGS (6) shall be performed a minimum of 4" away from VALVE (1)**
- Perform all other required connections to output device(s) (i.e. showerhead, handshower, etc…)
- Verify VOLUME CONTROL **(1a)** is in off position
- Turn on water supply and check for leaks
- If CARTRIDGE NUT **(10)** has been loosened, re-tighten to factory torque setting of 10lb.-ft (13.6 Nm)
- Replace MUDGUARD **(4)** on valve

IMPORTANT: Flush supply lines prior to installation to prevent damage and malfunction of thermostatic cartridge.

IMPORTANT: Cold water supply *must* be connected to inlet marked "COLD" and hot water supply *must* be connected to inlet marked "HOT".

CAUTION: This valve contains plastic and rubber components. Do not sweat or braze directly to the valve body. Do not apply excessive heat to the valve body when you make solder connections. Do not apply flux or acids directly to the valve, as damage to the seals, plastic components, and trim finish may result.

CAUTION: Inlet and outlet threaded joint connections should be made with plumber's Teflon tape or liquid sealant. DO NOT USE plumber's putty.

WARNING: Forcibly rotating thermostatic cartridge stem prior to installing handle trim, will damage cartridge and void warranty.

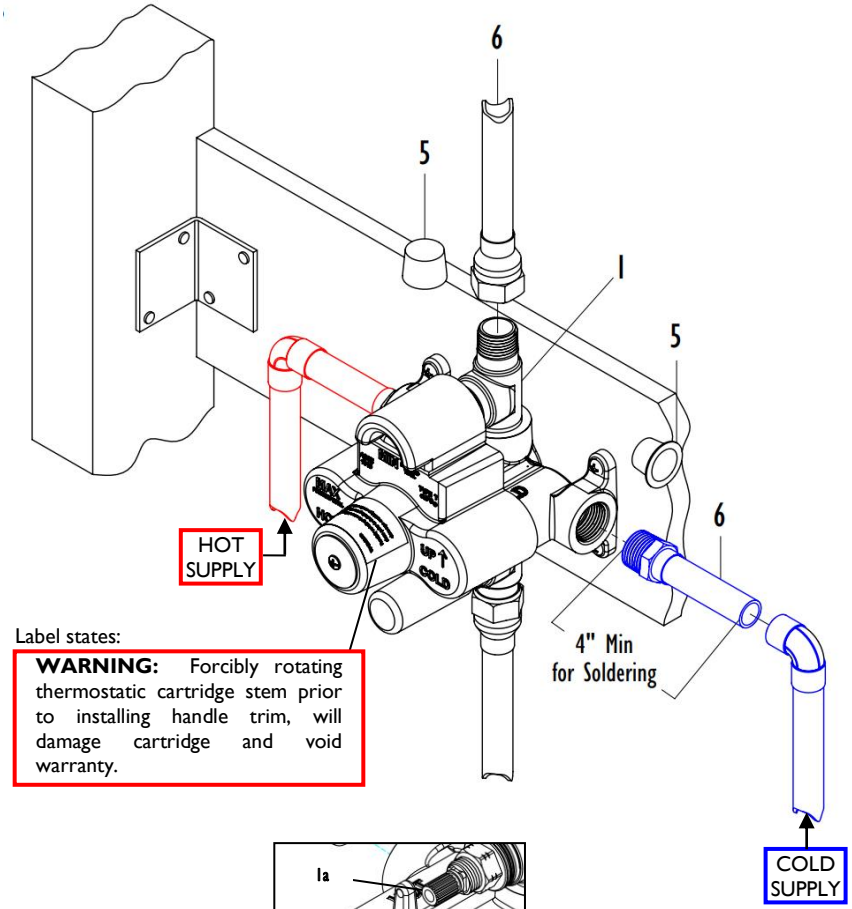

Label states:

WARNING: Forcibly rotating thermostatic cartridge stem prior to installing handle trim, will damage cartridge and void warranty.

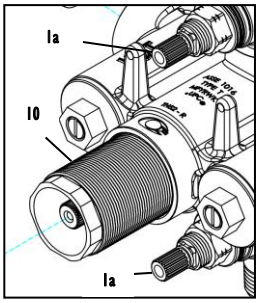

3 FINISHED WALL

- VALVE **(1)** shall be located in framed wall so that FINISHED WALL **(7)** falls within the MIN/MAX limits stated on MUDGUARD **(4)**
- The Maximum GAP **(8)** between FINISHED WALL **(7)** and MUDGUARD **(4)** shall be no more than 1/16" to allow for proper trim coverage
- These finished wall requirements are necessary for proper fit of trim as described in TO-TH2-XX & TO-THC2-XX ½" Thermostatic Trim with Dual Volume Control Installation Instructions

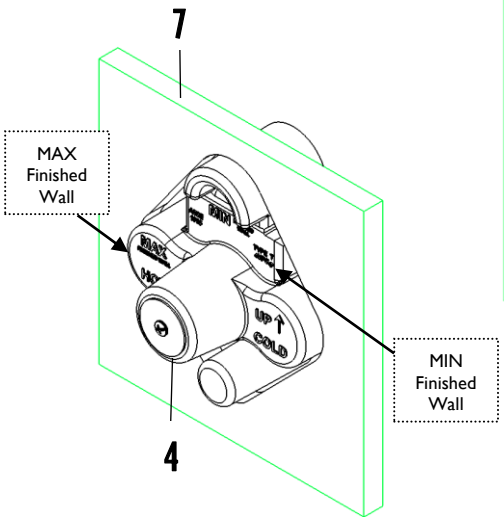

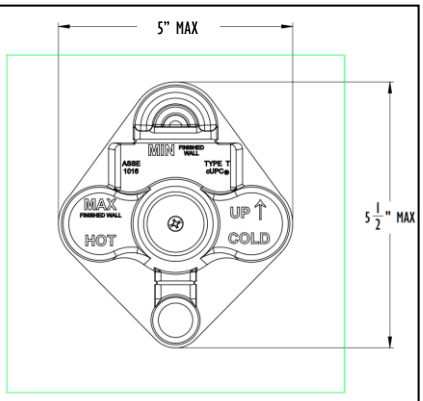

1/16" Gap between Mudguard & Finished Wall

4 MAINTENANCE

Thermostatic Cartridge Service

- Shut off water supply to thermostatic cartridge by turning hot & cold SERVICE STOP SCREW **(9)** clockwise (inward) until screw stops
- Remove CARTRIDGE NUT **(10)** from the BODY **(1)**
- Gently pull THERMOSTATIC CARTRIDGE **(11)** out of BODY **(1)** (rotating cartridge while pulling may assist in removal)
- Rinse cartridge screens under running water to remove any possible debris
- Prior to installing THERMOSTATIC CARTRIDGE **(11)** into BODY **(1)**, apply a thin film of non-petroleum-based grease onto O-RING **(12)**
- Align THERMOSTATIC CARTRIDGE STEM **(11a)** indentation or ink line with THERMOSTATIC CARTRIDGE GROOVE **(11b)** and insert THERMOSTATIC CARTRIDGE **(11)** into BODY **(1)** with THERMOSTATIC CARTRIDGE GROOVE **(11b)** straight up at 12 o'clock position
- Re-tighten CARTRIDGE NUT **(10)** to factory torque setting of 10lb.-ft. (13.6 Nm)
- Open water supply to thermostatic cartridge by turning hot & cold SERVICE STOP SCREW **(9)** counter-clockwise (outward) until screw stops

Check Valve Service

- Shut off water supply to valve inlets at main or valve upstream from BODY **(1)**
- Remove CHECK VALVE **(13)** from BODY **(1)**
- Rinse CHECK VALVE (14) under running water
- Prior to installing CHECK VALVE **(13)** into BODY **(1)**, apply a thin film of **non-petroleum** based grease onto O-RING **(14)**
- Tighten CECK VALVE **(13)** to 10 ft-lbs

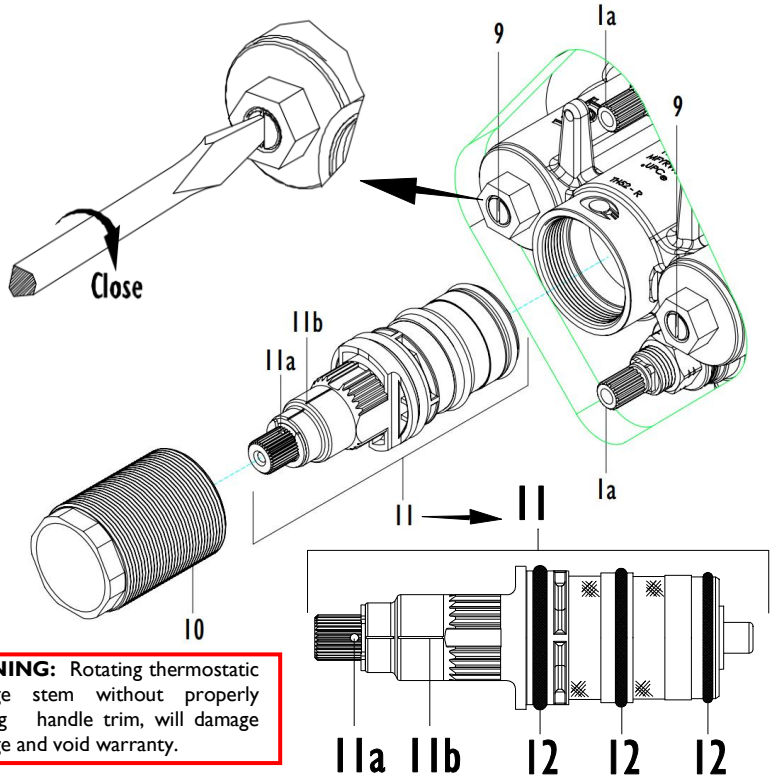

WARNING: Rotating thermostatic cartridge stem without properly installing handle trim, will damage cartridge and void warranty.

CARTRIDGE NUT must be re-tightened to 10.lb-ft. (13.6 Nm)

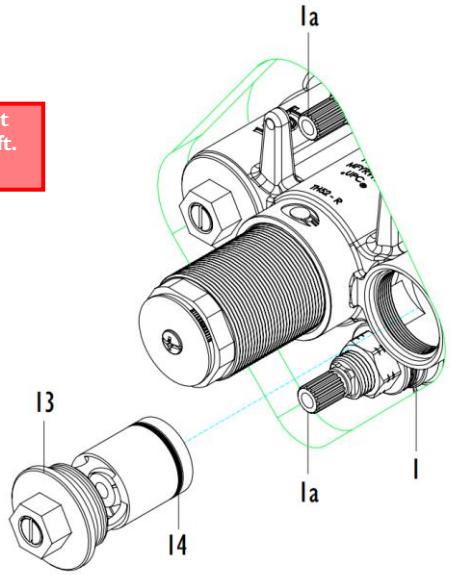

5 ROUGH-IN DIMENSIONS

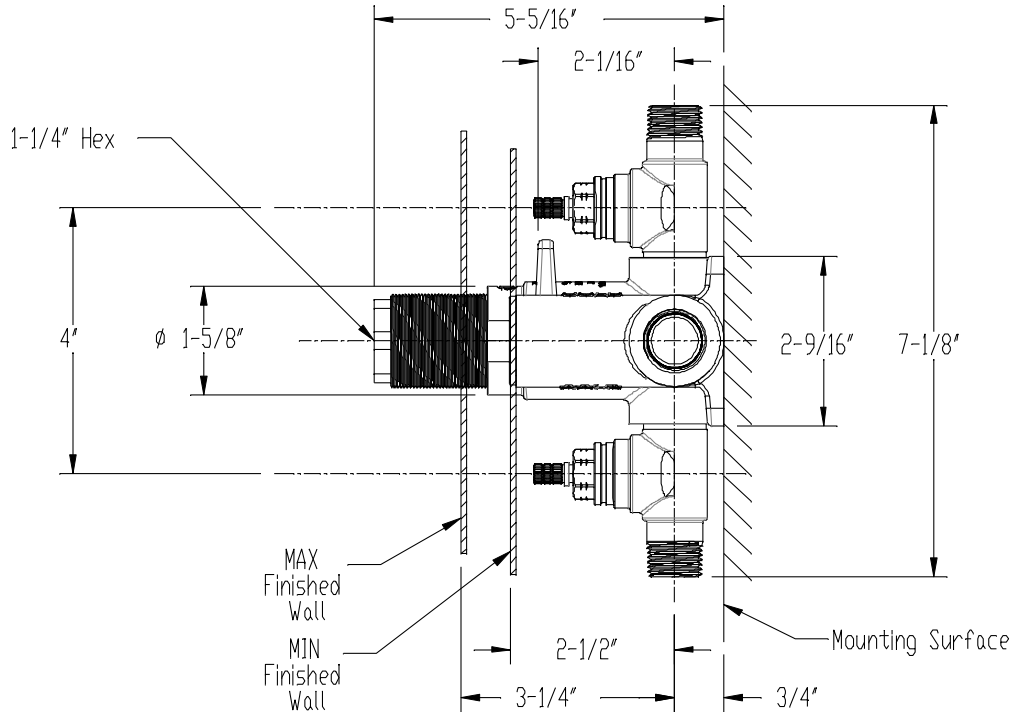

SIDE VIEW

FRONT VIEW

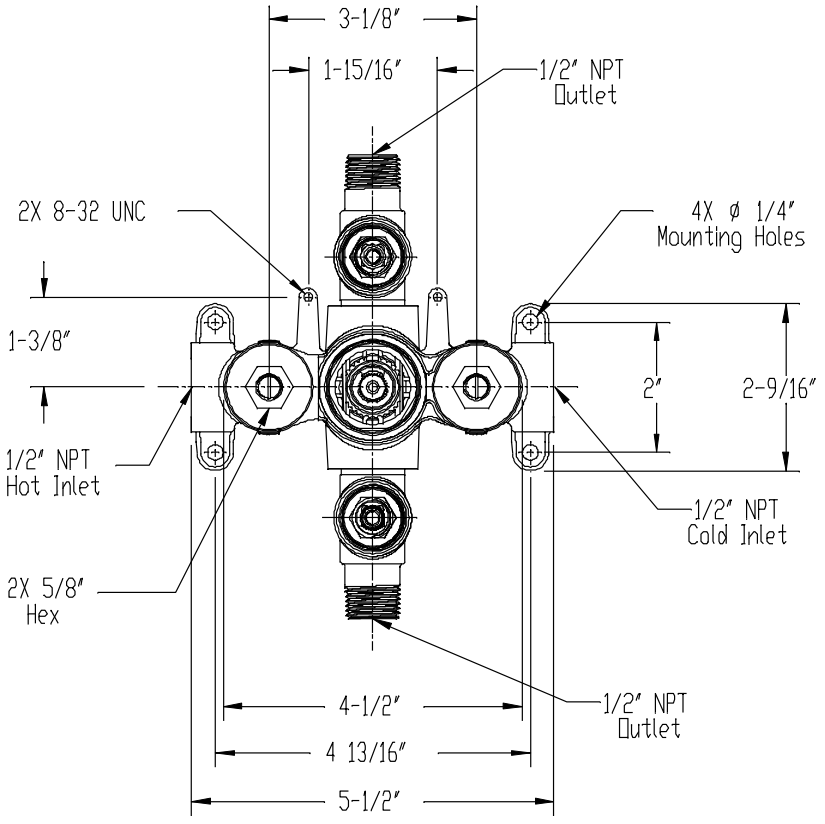

ALL DIMENSIONS SHOWN TO NEAREST 1/16”

www.calfaucets.com

5271 Argosy Ave. Huntington Beach, CA 92649

800-822-8855