California Faucets®

StyleTherm®

1/2" THERMOSTATIC VALVE W/ DUAL VOLUME CONTROL (ROUGH)

TH52-R

Features

- *Forged brass valve body construction*
- *Max flow rate: 10.0 gpm (37.9 L/m) @ 60 psi - Single*
- *Max flow rate: 14.0 gpm (54.1 L/m) @ 60 psi - Combined*
- *Integral service stops with check valves*
- *Single-handle temperature mixing*
- *Thermostatic anti-scald protection*
- *Genuine Vernet® mixing cartridge featuring*
  - *Polymer construction limits limescale build-up*
  - *Integrated filter screens*
  - *Paraffin wax element*
- *Dual integral shut-off/volume control valves*

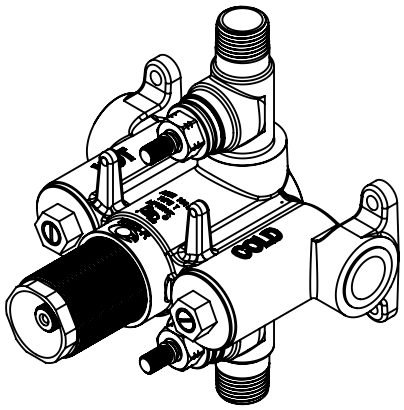

mudguard not shown

Codes/Standards

Product meets or exceeds the following:

- *ASME A112.18.1/CSA B125.1*
- *ASSE 1016*

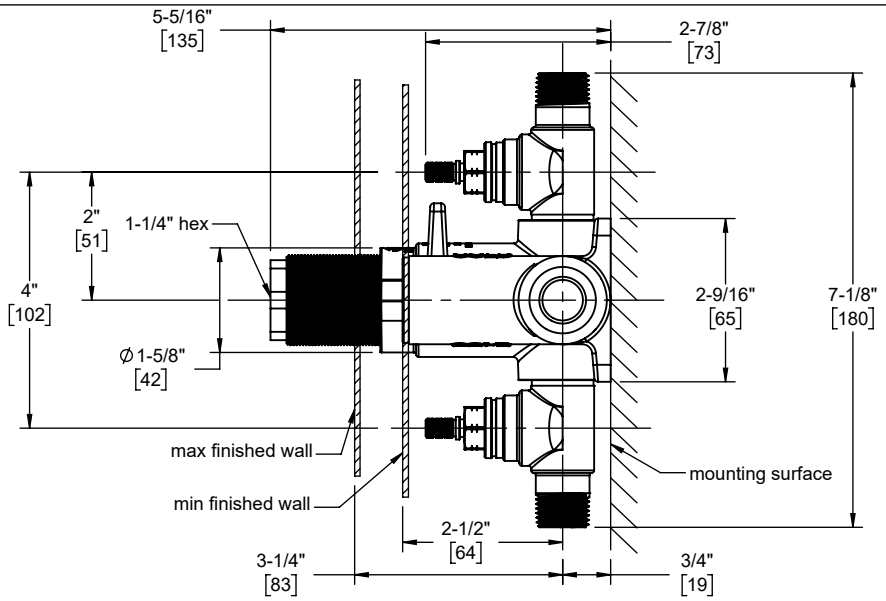

side view

front view

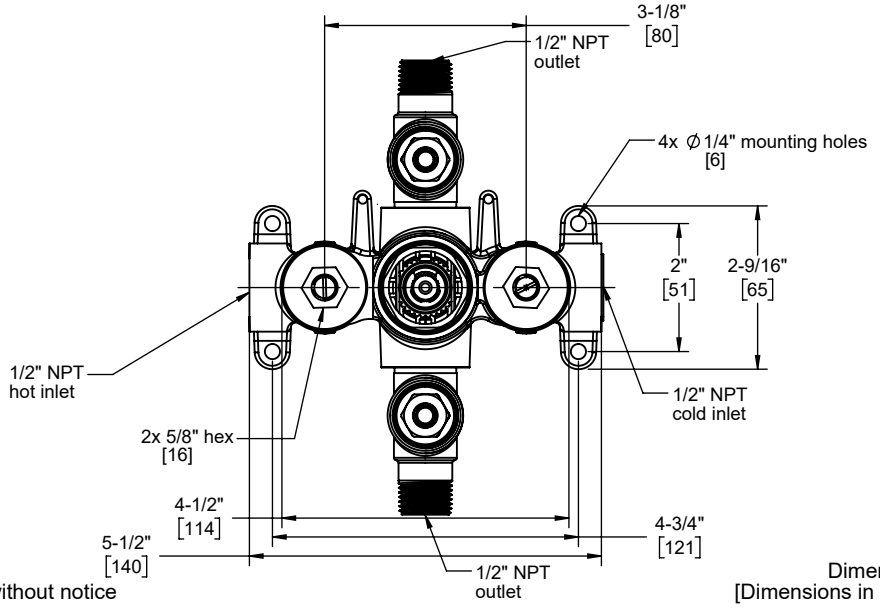

Specifications subject to change without notice

Dimensions are inches, rounded to 1/16"
[Dimensions in brackets are mm, rounded to 1mm]