GEBERIT

OCTOBER 2021

PRODUCT AND PARTS **CATALOG**



KNOW HOW INSTALLED

Table of Contents

Geberit North America is part of the Geberit Group, a European market leader and global provider of sanitary technology. Located in Des Plaines, Illinois, Geberit North America provides concealed tank and carrier systems for wall-hung and floor-mounted toilets and fixtures. Geberit systems improve the look of any bathroom by hiding the unsightly toilet tank. Replacing a standard tank and toilet with the Geberit system results in more usable space, improved hygiene and better accessibility. The unique dual-flush valve saves water and is practically maintenance free. Geberit also offers cable-controlled bath waste and overflows in a variety of designer finishes. Critical working parts are outside the waterway, ensuring years of trouble-free operation.

For more information, contact your Geberit sales representative, call **800/566-2100** or go to **geberit.us**.

Geberit Installation Systems — **Page 3**

Product features, installation scenarios and system components 4-5

Systems for Wall-Hung Toilets

Geberit Duofix Carrier with Sigma Concealed Tank (2x6 Installation) and actuators 6-8

Geberit Duofix Carrier with Sigma Concealed Tank (2x4 Installation) and actuators 10-12

Geberit Duofix Carrier with Omega Concealed Tank (2x6 pre-wall Installation) and actuators 14

Systems for Wall-Hung Urinals

Geberit Duofix Carrier and actuators 15

Systems for Wall-Hung Bidets

Geberit Duofix Carrier 16

Systems for Wall-Hung Lavatories

Geberit Duofix Carrier 16

Systems for Floor-Mounted, Back Outlet Toilets

Geberit Sigma Concealed Tank (2x6 Installation) and actuators 18-20

Systems for Wall-Hung Toilets (2x4)

Geberit Duofix Carrier with Sigma Concealed Tank (2x4 Installations) and Actuators 22-24

System Accessories

Installation and Flushing Systems 26-28

Geberit Bath Waste and Trap Systems — **31**

Trim Finishes and Rough-In Unit Materials 32-33

Selecting the Right Size Bath Waste and Overflow 34-35

TurnControl BWO Systems

Rough-in, Remote Control, Complete Units, Trim Kits and accessories 36-37

PushControl BWO Systems

Complete Units and accessories 38

TurnControl BWO Systems with Cascading Tub Filler

Complete Units and accessories 38

Lavatory Traps

For space-saving connection of lavatories in bathroom furniture 38

Geberit Replacement Parts — **39**

Installation Systems, Flushing System, Actuators and Cover Plates

Geberit Installation Systems, Duofix Carriers 40-48

Geberit Flushing System, Sigma Concealed Tank 49

Sigma, Samba, Twist, Mambo, Rumba and Tango Flush Plate Actuators 50-55

Type 01 and Type 10 Remote Push Button Actuators 56

Type 70 Remote Push Button Actuators 57

Rectangular Remote Push Button Actuators 58

Inactive Remote Push Buttons Actuators 59-60

Sigma Cover Plates 61

Sigma Cover Plates, Surface Even 62

Omega Cover Plate, Surface Even 62

Omega Flush Plate Actuators 63

Inactive Kappa Flush Plate Actuators 64

Inactive Flush Plate Actuators 65-66

Urinal Flush Plate Actuators 67-68

Flushing Systems

Filling Valves and Flushing Valves 70-71

Bath Waste and Trap Systems

Replacement parts, kits, TurnControl handles and plunger assemblies 72-73

Index — **74-76**

Limited Warranty — **78**

Possession of this Catalog does not constitute an offer to sell Geberit product.

Please refer to **geberit.us** for our comprehensive terms and conditions.

The information contained in this document is subject to change without notice.

GEBERIT INSTALLATION SYSTEMS



The information contained in this document is subject to change without notice.

GEBERIT INSTALLATION SYSTEMS

Distinctive… Sustainable… Uncompromising

Geberit Installation Systems keep the unsightly out of sight.

AESTHETICS

Safely hidden behind the wall, Geberit in-wall technology allows unique beauty from floor to ceiling.

WATER SAVING

Geberit dual-flush technology provides an effective flush volume of 1.1 GPF, exceeding the 1.28 GPF High Efficiency Toilet (HET) standard.

SPACE SAVING

Putting the unsightly toilet tank in the wall, where it belongs, gives you more room. The entire bathroom is safer and more accessible.

EASY TO CLEAN

Because the toilet is off the floor, cleaning the entire area is easy.

FLEXIBILITY

The adjustable-height carrier allows you to position the toilet 15" to 19" off the floor for meeting ADA requirements or personal preference.

STRENGTH AND STABILITY

The Geberit installation system supports up to 880 lbs., exceeding ASME A112.6.2 strength requirements.

ACCESSIBLE MAINTENANCE

The Geberit installation system offers easy access to all internal components, including the fill and flush valves, through decorative actuator flush panels. No tools are needed for simple changeouts.



Duravit Vero toilet with Sigma50 flush plate in Umber Glass finish

The information contained in this document is subject to change without notice.

INSTALLATION SCENARIOS

Geberit Duofix carriers are simple and easy to install. They require either a 2" x 4" or a 2" x 6" wood frame or metal frame construction. The studs must be placed 19-3/4" apart where the carrier will be positioned inside a wall. For pre-wall installations, frame to wall anchors are needed.

Wood frame in-wall installation, front activation.

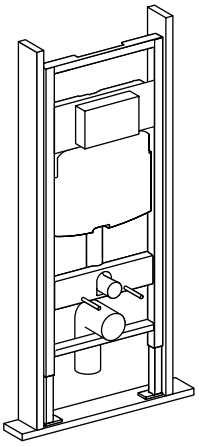

Metal frame in-wall installation, front activation.

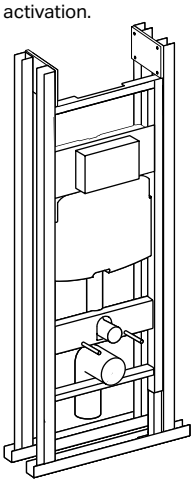

Pre-wall installation, front activation.

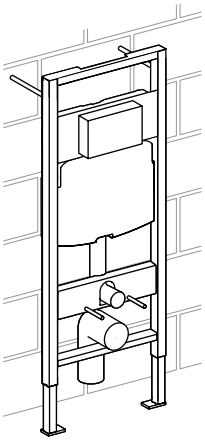

Pre-wall installation, top or front activation.

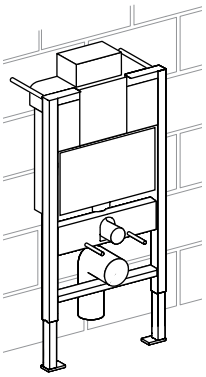

SYSTEM COMPONENTS

Toilet (See pages 6-14, 18-24)

Geberit Duofix Carrier with Concealed Tank

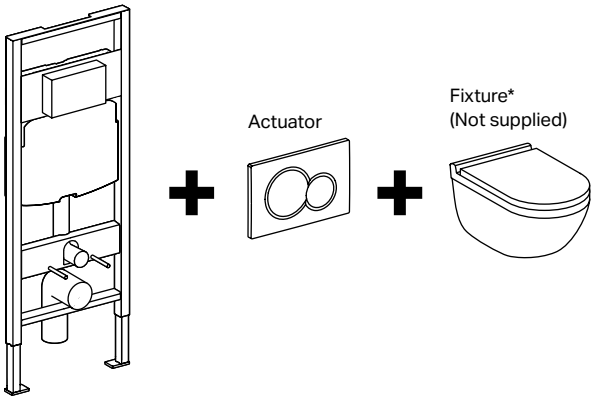

Lavatory (See page 16)

Geberit Duofix Carrier

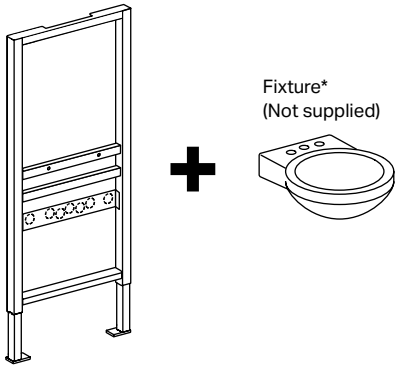

Urinal (See page 15)

Geberit Duofix Carrier

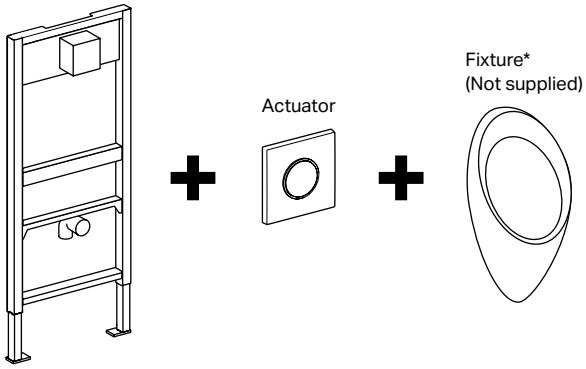

Bidet (See page 16)

Geberit Duofix Carrier

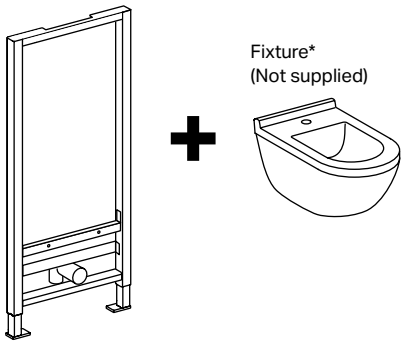

* Contact vitreous china manufacturer for complete selection of products. Refer to **geberit.us** for recommended manufacturers.

The information contained in this document is subject to change without notice.

GEBERIT INSTALLATION SYSTEMS

Systems for Wall-Hung Toilets for Sigma 2x6 Installation

Geberit Duofix Carrier, Sigma 2x6 Installation

Model No.	Description	List Price $
111.335.00.5	Carrier frame with 1.60/0.8 GPF Sigma Concealed Tank	622.00
111.902.00.5	Carrier frame with 1.28/0.8 GPF Sigma Concealed Tank	622.00

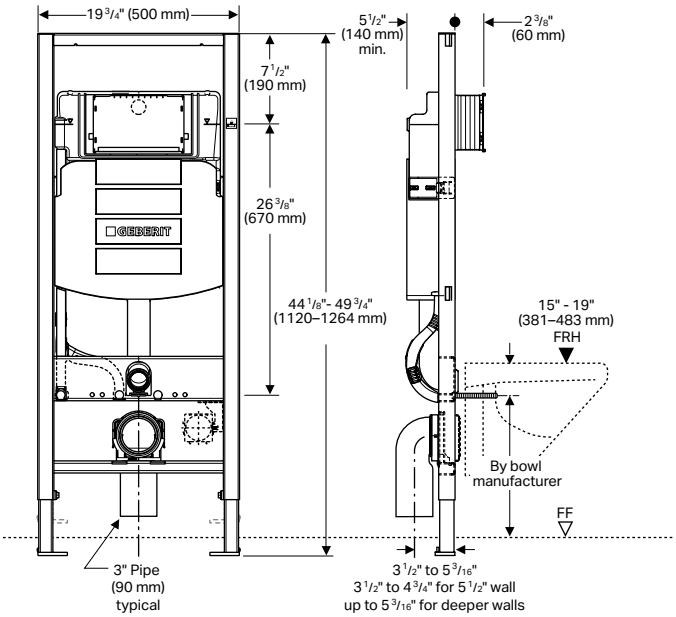

NOTES:
1. Concealed tank shipped dual-flush ready
2. Geberit Duofix Carrier for 2-hole washdown style wall-hung toilet fixtures only
3. Refer to **geberit.us** for latest list of code approved compatible toilet fixtures, including certified WaterSense® combinations

Note: For System Accessories see pages 26-28.

Dual-Flush Actuators, Sigma 2x6 Installation

Style	Material	Finish	Model No.	List Price $
Sigma01 	Plastic	Alpine White	115.770.11.5	104.00
		Polished Chrome	115.770.21.5	143.00
		Matte Chrome	115.770.JQ.5	143.00
		Brass Galvanized ***NEW!***	115.770.DT.5	456.00
		Jet Black ***NEW!***	115.770.DW.5	126.00
Sigma20 	Stainless	Brushed Nickel-Polished Nickel-Brushed Nickel*	115.882.ID.1	294.00
		Brushed Stainless Steel-Polished Stainless Steel-Brushed Stainless Steel*	115.882.SN.1	295.00
		Brushed Nickel-Polished Nickel-Brushed Nickel* Vandal Resistant	115.889.ID.1	343.00
		Brushed Stainless Steel-Polished Stainless Steel-Brushed Stainless Steel* Vandal Resistant	115.889.SN.1	343.00
	Plastic	White Matte Coated-White ***NEW!***	115.882.01.1	261.00
		White-Matte White ***NEW!***	115.882.11.1	152.00
		Matte Black-Polished Chrome-Matte Black*	115.882.14.1	261.00
		Black Matte Coated-Black ***NEW!***	115.882.16.1	261.00
		Black-Matte Black ***NEW!***	115.882.DW.1	187.00
		Matte Chrome-Polished Chrome-Matte Chrome*	115.882.JQ.1	284.00
		Matte White-Polished Chrome-Matte White*	115.882.JT.1	261.00
		Polished Chrome-Matte Chrome-Polished Chrome*	115.882.KH.1	219.00
		White-Polished Chrome-White*	115.882.KJ.1	152.00

The information contained in this document is subject to change without notice.

Dual-Flush Actuators, Sigma 2x6 Installation (continued)

Style	Material	Finish	Model No.	List Price $
Sigma20 	Plastic	White-Polished Gold-White*	115.882.KK.1	422.00
		Black-Polished Chrome-Black*	115.882.KM.1	187.00
Sigma21 	Zinc PVD Red Gold Color ***NEW!***	Customizable	115.650.00.1	724.00
		Mustang Slate	115.650.JM.1	905.00
		Concrete Look	115.650.JV.1	905.00
		Black Walnut	115.650.JX.1	1,234.00
		White	115.650.SI.1	795.00
		Black	115.650.SJ.1	795.00
	Zinc PVD Black Chrome Color ***NEW!***	Customizable	115.651.00.1	724.00
		Mustang Slate	115.651.JM.1	905.00
		Concrete Look	115.651.JV.1	905.00
		Black Walnut	115.651.JX.1	1,234.00
		White	115.651.SI.1	795.00
		Black	115.651.SJ.1	795.00
	Zinc PVD Brass Color ***NEW!***	Customizable	115.652.00.1	724.00
		Mustang Slate	115.652.JM.1	905.00
		Concrete Look	115.652.JV.1	905.00
		Black Walnut	115.652.JX.1	1,234.00
		White	115.652.SI.1	795.00
		Black	115.652.SJ.1	795.00
	Zinc Chrome Color	Camel ***NEW!***	115.761.00.4	552.00
		Beige ***NEW!***	115.761.00.5	552.00
		Grey Linen ***NEW!***	115.761.00.6	552.00
		Dark Rock ***NEW!***	115.761.00.7	552.00
		Concrete Look ***NEW!***	115.884.JV.1	552.00
		Black Walnut ***NEW!***	115.884.JX.1	867.00
		Customer supplied overlay	115.884.00.1	434.00
		Lava Glass ***NEW!***	115.884.JK.1	558.00
		Grey Sand Glass ***NEW!***	115.884.JL.1	558.00
		Mustang Slate	115.884.JM.1	558.00
		White Glass	115.884.SI.1	558.00
		Black Glass	115.884.SJ.1	558.00
Sigma30 	Plastic	White Matte Coated-Coated-White ***NEW!***	115.883.01.1	289.00
		White-Matte White ***NEW!***	115.883.11.1	176.00
		Matte Black-Polished Chrome-Matte Black***	115.883.14.1	289.00
		Black Matte Coated-Black ***NEW!***	115.883.16.1	289.00
		Black-Matte Black ***NEW!***	115.883.DW.1	198.00
		Matte Chrome-Polished Chrome-Matte Chrome***	115.883.JQ.1	302.00
		Matte White-Polished Chrome-Matte White***	115.883.JT.1	289.00
		Polished Chrome-Matte Chrome-Polished Chrome***	115.883.KH.1	246.00
		White-Polished Chrome-White***	115.883.KJ.1	154.00
		White-Polished Gold-White***	115.883.KK.1	198.00
		Black-Polished Chrome-Black***	115.883.KM.1	198.00
Sigma50 	Zinc PVD Red Gold Color ***NEW!***	Customizable	115.670.00.2	724.00
		White	115.670.11.2	724.00
		Black	115.670.DW.2	724.00
		Mustang Slate	115.670.JM.2	905.00
		Concrete Look	115.670.JV.2	905.00
		Black Walnut	115.670.JX.2	1,234.00
	Zinc PVD Black Chrome Color ***NEW!***	Customizable	115.671.00.2	724.00
		White	115.671.11.2	724.00
		Black	115.671.DW.2	724.00
		Mustang Slate	115.671.JM.2	905.00
		Concrete Look	115.671.JV.2	905.00
		Black Walnut	115.671.JX.2	1,234.00

Products marked with ♿ comply with the American Disabilities Act (ADA) when installed per the requirements of the latest ADA Accessibility Guidelines (ADAAG) and/or ICC/ANSI A117.1.

Dual-Flush Actuators, Sigma 2x6 Installation (continued)

Style	Material	Finish	Model No.	List Price $
Sigma50 	Zinc PVD Brass Color *NEW!*	Customizable	115.672.00.2	724.00
		White	115.672.11.2	724.00
		Black	115.672.DW.2	724.00
		Mustang Slate	115.672.JM.2	905.00
		Concrete Look	115.672.JV.2	905.00
		Black Walnut	115.672.JX.2	1,234.00
Sigma50 	Zinc Chrome Color	Concrete Look *NEW!*	115.788.JV.2	552.00
		Black Walnut *NEW!*	115.788.JX.2	867.00
		Customizable	115.788.00.2	434.00
		White	115.788.11.2	434.00
		Bright Chrome	115.788.21.2	558.00
		Black	115.788.DW.2	434.00
		Brushed Chrome	115.788.GH.2	558.00
		Lava Glass *NEW!*	115.788.JK.2	558.00
		Grey Sand Glass *NEW!*	115.788.JL.2	558.00
		Mustang Slate	115.788.JM.2	558.00
		Smoked Glass	115.788.SD.2	558.00
Sigma60† 	Zinc	Brushed Chrome	115.640.GH.1	731.00
	Glass	Lava Glass *NEW!*	115.640.JK.1	731.00
		Grey Sand Glass *NEW!*	115.640.JL.1	731.00
		White Glass	115.640.SI.1	731.00
		Black Glass	115.640.SJ.1	731.00
		Rough-in set (REQUIRED accessory)	243.168.00.1	18.00
		Cover frame (optional accessory) Polished Chrome	115.641.21.1	197.00
		Cover frame (optional accessory) Brushed Chrome	115.641.GH.1	197.00
Sigma70 	Plastic	Customizable	115.620.00.1	619.00
	Stainless	Brushed Stainless Steel	115.620.FW.1	820.00
	Glass	Lava Glass *NEW!*	115.620.JK.1	724.00
		Grey Sand Glass *NEW!*	115.620.JL.1	724.00
		White Glass	115.620.SI.1	724.00
		Black Glass	115.620.SJ.1	724.00

Single-Flush Actuators, Sigma 2x6 Installation

Style	Material	Finish	Model No.	List Price $
Sigma10‡ 	Stainless	Matte Black-Polished Chrome-Matte Black*	115.758.14.5	409.00
		Matte White-Polished Chrome-Matte White*	115.758.JT.5	409.00
		Brushed Stainless Steel-Polished Stainless Steel-Brushed Stainless Steel*	115.758.SN.5	299.00
		Brushed Stainless Steel-Polished Stainless Steel-Brushed Stainless Steel* Vandal Resistant	115.787.SN.5	339.00
	Plastic	Polished Chrome-Matte Chrome-Polished Chrome*	115.758.KH.5	219.00
		White-Polished Chrome-White*	115.758.KJ.5	153.00
		White-Polished Gold-White*	115.758.KK.5	435.00
		Black-Polished Chrome-Black*	115.758.KM.5	187.00
		Matte Chrome-Polished Chrome-Matte Chrome*	115.758.JQ.5	219.00

Single-Flush Actuators, Sigma 2x6 Installation (continued)

Style	Material	Finish	Model No.	List Price $
Sigma30‡ 	Zinc	Matte Black-Polished Chrome-Matte Black***	115.893.14.1	390.00
		Matte White-Polished Chrome-Matte White***	115.893.JT.1	390.00
		Polished Gold***	115.893.45.1	3,157.00
		White-Polished Chrome-White***	115.893.KJ.1	290.00
		Brushed Chrome-Polished Chrome-Brushed Chrome***	115.893.KX.1	427.00
		Polished Chrome-Brushed Chrome-Polished Chrome***	115.893.KY.1	427.00

Dual-Flush Hands-Free Actuators and Transformer, Sigma 2x6 Installation

Style	Material	Finish	Model No.	List Price $
Sigma10 	Stainless	Brushed Stainless Steel-Polished Stainless Steel-Brushed Stainless Steel* Vandal Resistant (AC Power with manual override)	115.890.SN.5	1025.00
		Brushed Stainless Steel-Polished Stainless Steel-Brushed Stainless Steel* Vandal Resistant (Battery/DC Power with manual override)	115.891.SN.5	1056.00
Sigma 10 	Plastic	Polished Chrome-Matte Chrome* (AC Power)	115.907.KH.1	836.00
		White-Polished Chrome* (AC Power)	115.907.KJ.1	836.00
		White-Polished Gold* (AC Power)	115.907.KK.1	836.00
		White-Matte Chrome* (AC Power)	115.907.KL.1	836.00
		Black-Polished Chrome* (AC Power)	115.907.KM.1	836.00
		Matte Chrome-Polished Chrome* (AC Power)	115.907.KN.1	836.00
	Stainless	Brushed Stainless Steel-Polished Stainless Steel* (AC Power)	115.907.SN.1	897.00
		 Required Transformer for AC powered hands-free actuator (order separately)	115.861.00.1	175.00
	Plastic	Polished Chrome-Matte Chrome* (Battery)	115.908.KH.1	860.00
		White-Polished Chrome* (Battery)	115.908.KJ.1	860.00
		White-Polished Gold* (Battery)	115.908.KK.1	860.00
		White-Matte Chrome* (Battery)	115.908.KL.1	860.00
		Black-Polished Chrome* (Battery)	115.908.KM.1	860.00
		Matte Chrome-Polished Chrome* (Battery)	115.908.KN.1	860.00
	Stainless	Brushed Stainless Steel-Polished Stainless Steel* (Battery)	115.908.SN.1	922.00
Sigma80 	Glass	Black (AC Power)	116.090.SG.1	1,713.00
		Mirror (AC Power)	116.090.SM.1	1,713.00
		Note: Sigma80 not recommended for bidet seat applications		
		 Required Transformer for AC powered hands-free actuator (order separately)	115.861.00.1	175.00
		 Extension mains cable (optional accessory for Sigma10 and Sigma80) length 78–3/4" (2 m)	241.831.00.1	84.00

Remote Programming Accessory for Hands-Free Actuators

 "Service Handy" remote programming device for Geberit touch-free devices	115.860.00.1	411.00

* Finishes follow this pattern = Plate-Ring-Button
** Finishes follow this pattern = Frame-Button
***Finishes follow this pattern = Frame-Button Edge Trim-Button
† Note: For tile, stone or other hard surfaced walls only!
‡ Not intended to be sold in California with 1.6 GPF units

The information contained in this document is subject to change without notice.

Products marked with comply with the American Disabilities Act (ADA) when installed per the requirements of the latest ADA Accessibility Guidelines (ADAAG) and/or ICC/ANSI A117.1.

GEBERIT INSTALLATION SYSTEMS

Systems for Wall-Hung Toilets for Sigma 2x6 Installation

Dual-Flush Buttons for Concealed Installations, Sigma 2x6 Installation

Style	Material	Finish	Model No.	List Price $
Type 01 	Plastic	Alpine White	116.042.11.1	139.00
		Polished Chrome	116.042.21.1	181.00
	Plastic	Alpine White ♿	116.044.11.1	139.00
Type 10 	Plastic	Matte Chrome-Polished Chrome**	116.055.KH.1	198.00
		Polished Chrome-White**	116.055.KJ.1	181.00
		Polished Chrome-Black** ***NEW!***	116.055.KM.1	198.00
Type 70 	Stainless	Brushed Stainless Steel ♿	115.630.FW.1	923.00
	Glass	Lava Glass ***NEW!***	115.630.JK.1	785.00
		Grey Sand Glass ***NEW!***	115.630.JL.1	785.00
		White Glass ♿	115.630.SI.1	785.00
		Black Glass ♿	115.630.SJ.1	785.00
Rectangle	Plastic	Polished Chrome-Matte Chrome**	116.051.KA.1	181.00
		Black-Chrome ***NEW!***	116.051.KV.1	181.00
	Zinc	Brushed Chrome	116.051.GH.1	313.00
	Plastic	Polished Chrome ♿	116.052.21.1	181.00

Dual-Flush Buttons for Furniture Installations, Sigma 2x6 Installation

Style	Material	Finish	Model No.	List Price $
Type 01 	Plastic	Alpine White	116.050.11.1	139.00
		Polished Chrome	116.050.21.1	181.00
		Matte Chrome	116.050.46.1	181.00
Type 10 	Plastic	Matte Chrome-Polished Chrome**	116.057.KH.1	198.00
		Polished Chrome-White**	116.057.KJ.1	181.00

Single-Flush Buttons for Concealed Installations, Sigma 2x6 Installation

Type 01‡ 	Plastic	Alpine White	116.040.11.1	119.00
		Polished Chrome	116.040.21.1	139.00

Extension Hoses for Flush Button Installations

(For Flush Buttons located beyond 6' from carrier)

	Double pneumatic hose for dual-flush 78.74" (2 m) (Blue/Clear for Type01/Type10/Rectangle)	240.575.00.1	10.00
	Double pneumatic hose, 78.74" (2 m), dual-flush (Green/Clear for Type70)	243.297.00.1	10.00
	Pneumatic hose 137.80" (3.5 m) for single flush	256.000.00.1	9.00

Cover Plates for Sigma Concealed Tank, Sigma 2x6 Installation, for use with Flush Buttons

	Glass	White	115.766.SI.1	243.00
	Stainless	Brushed Stainless Steel Vandal Resistant	115.764.FW.1	194.00
		Customizable	115.766.00.1	194.00
	Plastic	Alpine White	115.768.11.1	85.00
		Polished Chrome	115.768.21.1	111.00
		Matte Chrome	115.768.46.1	111.00

Surface Even Cover Plates for Sigma Concealed Tank, 2x6 Installation, for use with Flush Buttons

	Plastic	Customizable†	115.696.00.1	243.00
		Customizable with frame†	115.697.00.1	306.00
		Rough-in set (REQUIRED accessory. Purchase with one of above)	243.168.00.1	18.00

* Finishes follow this pattern = Plate-Ring-Button
** Finishes follow this pattern = Frame-Button
***Finishes follow this pattern = Frame-Button Edge Trim-Button
† Note: For tile, stone or other hard surfaced walls only!
‡ Not intended to be sold in California with 1.6 GPF units

The information contained in this document is subject to change without notice.



The information contained in this document is subject to change without notice.

GEBERIT INSTALLATION SYSTEMS

Systems for Wall-Hung Toilets, 2x4 Installation

Geberit Duofix Carrier, Sigma 2x4 Installation

Model No.	Description	List Price $
111.798.00.1	Carrier frame with 1.6/0.8 GPF Sigma Concealed Tank	760.00
111.597.00.1	Carrier frame with 1.28/0.8 GPF Sigma Concealed Tank	760.00

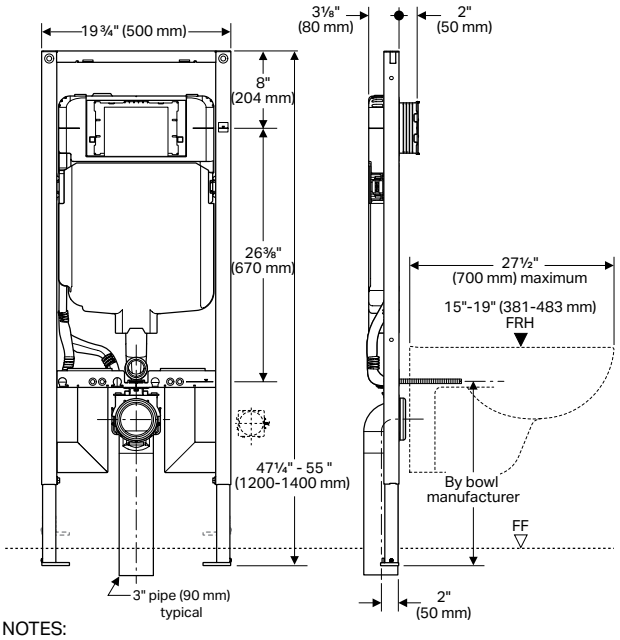

NOTES:
1. Concealed tank shipped dual-flush ready
2. Geberit Duofix Carrier for 2-hole washdown style wall-hung toilet fixtures only
3. Refer to **geberit.us** for latest list of Code approved Compatible toilet fixtures, including certified WaterSense® combinations

Note: For System Accessories see pages 26-28.

Dual-Flush Actuators, Sigma 2x4 Installation

Style	Material	Finish	Model No.	List Price $
Sigma01 	Plastic	Alpine White	115.770.11.5	104.00
		Polished Chrome	115.770.21.5	143.00
		Matte Chrome	115.770.JQ.5	143.00
		Brass Galvanized *NEW!*	115.770.DT.5	456.00
		Jet Black *NEW!*	115.770.DW.5	126.00
Sigma20 	Stainless	Brushed Nickel-Polished Nickel-Brushed Nickel*	115.882.ID.1	294.00
		Brushed Stainless Steel-Polished Stainless Steel-Brushed Stainless Steel*	115.882.SN.1	295.00
		Brushed Nickel-Polished Nickel-Brushed Nickel* Vandal Resistant	115.889.ID.1	343.00
		Brushed Stainless Steel-Polished Stainless Steel-Brushed Stainless Steel* Vandal Resistant	115.889.SN.1	343.00
	Plastic	White Matte Coated-White *NEW!*	115.882.01.1	261.00
		White-Matte White *NEW!*	115.882.11.1	152.00
		Matte Black-Polished Chrome-Matte Black*	115.882.14.1	261.00
		Black Matte Coated-Black *NEW!*	115.882.16.1	261.00
		Black-Matte Black *NEW!*	115.882.DW.1	187.00
		Matte Chrome-Polished Chrome-Matte Chrome*	115.882.JQ.1	284.00
		Matte White-Polished Chrome-Matte White*	115.882.JT.1	261.00
		Polished Chrome-Matte Chrome-Polished Chrome*	115.882.KH.1	219.00
		White-Polished Chrome-White*	115.882.KJ.1	152.00
		White-Polished Gold-White*	115.882.KK.1	422.00
		Black-Polished Chrome-Black*	115.882.KM.1	187.00

The information contained in this document is subject to change without notice.

Dual-Flush Actuators, Sigma 2x4 Installation (continued)

Style	Material	Finish	Model No.	List Price $
Sigma21 	Zinc PVD Red Gold Color *NEW!*	Customizable	115.650.00.1	724.00
		Mustang Slate	115.650.JM.1	905.00
		Concrete Look	115.650.JV.1	905.00
		Black Walnut	115.650.JX.1	1,234.00
		White	115.650.SI.1	795.00
		Black	115.650.SJ.1	795.00
	Zinc PVD Black Chrome Color *NEW!*	Customizable	115.651.00.1	724.00
		Mustang Slate	115.651.JM.1	905.00
		Concrete Look	115.651.JV.1	905.00
		Black Walnut	115.651.JX.1	1,234.00
		White	115.651.SI.1	795.00
		Black	115.651.SJ.1	795.00
	Zinc PVD Brass Color *NEW!*	Customizable	115.652.00.1	724.00
		Mustang Slate	115.652.JM.1	905.00
		Concrete Look	115.652.JV.1	905.00
		Black Walnut	115.652.JX.1	1,234.00
		White	115.652.SI.1	795.00
		Black	115.652.SJ.1	795.00
	Zinc Chrome Color	Camel *NEW!*	115.761.00.4	552.00
		Beige *NEW!*	115.761.00.5	552.00
		Grey Linen *NEW!*	115.761.00.6	552.00
		Dark Rock *NEW!*	115.761.00.7	552.00
		Concrete Look *NEW!*	115.884.JV.1	552.00
		Black Walnut *NEW!*	115.884.JX.1	867.00
		Customer supplied overlay	115.884.00.1	434.00
		Lava Glass *NEW!*	115.884.JK.1	558.00
		Grey Sand Glass *NEW!*	115.884.JL.1	558.00
		Mustang Slate	115.884.JM.1	558.00
		White Glass	115.884.SI.1	558.00
		Black Glass	115.884.SJ.1	558.00
Sigma30 	Plastic	White Matte Coated-Coated-White *NEW!*	115.883.01.1	289.00
		White-Matte White *NEW!*	115.883.11.1	176.00
		Matte Black-Polished Chrome-Matte Black***	115.883.14.1	289.00
		Black Matte Coated-Black *NEW!*	115.883.16.1	289.00
		Black-Matte Black *NEW!*	115.883.DW.1	198.00
		Matte Chrome-Polished Chrome-Matte Chrome***	115.883.JQ.1	302.00
		Matte White-Polished Chrome-Matte White***	115.883.JT.1	289.00
		Polished Chrome-Matte Chrome-Polished Chrome***	115.883.KH.1	246.00
		White-Polished Chrome-White***	115.883.KJ.1	154.00
		White-Polished Gold-White***	115.883.KK.1	198.00
		Black-Polished Chrome-Black***	115.883.KM.1	198.00
Sigma50 	Zinc PVD Red Gold Color *NEW!*	Customizable	115.670.00.2	724.00
		White	115.670.11.2	724.00
		Black	115.670.DW.2	724.00
		Mustang Slate	115.670.JM.2	905.00
		Concrete Look	115.670.JV.2	905.00
		Black Walnut	115.670.JX.2	1,234.00
	Zinc PVD Black Chrome Color *NEW!*	Customizable	115.671.00.2	724.00
		White	115.671.11.2	724.00
		Black	115.671.DW.2	724.00
		Mustang Slate	115.671.JM.2	905.00
		Concrete Look	115.671.JV.2	905.00
		Black Walnut	115.671.JX.2	1,234.00

Products marked with comply with the American Disabilities Act (ADA) when installed per the requirements of the latest ADA Accessibility Guidelines (ADAAG) and/or ICC/ANSI A117.1.

Dual-Flush Actuators, Sigma 2x4 Installation (continued)

Style	Material	Finish	Model No.	List Price $
Sigma50 	Zinc PVD Brass Color *NEW!*	Customizable	115.672.00.2	724.00
		White	115.672.11.2	724.00
		Black	115.672.DW.2	724.00
		Mustang Slate	115.672.JM.2	905.00
		Concrete Look	115.672.JV.2	905.00
		Black Walnut	115.672.JX.2	1,234.00
Sigma50 	Zinc Chrome Color	Concrete Look *NEW!*	115.788.JV.2	552.00
		Black Walnut *NEW!*	115.788.JX.2	867.00
		Customizable	115.788.00.2	434.00
		White	115.788.11.2	434.00
		Bright Chrome	115.788.21.2	558.00
		Black	115.788.DW.2	434.00
		Brushed Chrome	115.788.GH.2	558.00
		Lava Glass *NEW!*	115.788.JK.2	558.00
		Grey Sand Glass *NEW!*	115.788.JL.2	558.00
		Mustang Slate	115.788.JM.2	558.00
		Smoked Glass	115.788.SD.2	558.00
Sigma60† 	Zinc	Brushed Chrome	115.640.GH.1	731.00
	Glass	Lava Glass *NEW!*	115.640.JK.1	731.00
		Grey Sand Glass *NEW!*	115.640.JL.1	731.00
		White Glass	115.640.SI.1	731.00
		Black Glass	115.640.SJ.1	731.00
		Rough-in set (included)	243.168.00.1	18.00
		Cover frame (optional accessory) Polished Chrome	115.641.21.1	197.00
		Cover frame (optional accessory) Brushed Chrome	115.641.GH.1	197.00
Sigma70 	Plastic	Customizable	115.625.00.1	619.00
	Stainless	Brushed Stainless Steel	115.625.FW.1	820.00
	Glass	Lava Glass *NEW!*	115.625.JK.1	724.00
		Grey Sand Glass *NEW!*	115.625.JL.1	724.00
		White Glass	115.625.SI.1	724.00
		Black Glass	115.625.SJ.1	724.00

Single-Flush Actuators, Sigma 2x4 Installation

Style	Material	Finish	Model No.	List Price $
Sigma10‡ 	Stainless	Matte Black-Polished Chrome-Matte Black*	115.758.14.5	409.00
		Matte White-Polished Chrome-Matte White*	115.758.JT.5	409.00
		Brushed Stainless Steel-Polished Stainless Steel-Brushed Stainless Steel*	115.758.SN.5	299.00
		Brushed Stainless Steel-Polished Stainless Steel-Brushed Stainless Steel* Vandal Resistant	115.787.SN.5	339.00
	Plastic	Polished Chrome-Matte Chrome-Polished Chrome*	115.758.KH.5	219.00
		White-Polished Chrome-White*	115.758.KJ.5	153.00
		White-Polished Gold-White*	115.758.KK.5	435.00
		Black-Polished Chrome-Black*	115.758.KM.5	187.00
		Matte Chrome-Polished Chrome-Matte Chrome*	115.758.JQ.5	219.00
Sigma30‡ 	Zinc	Matte Black-Polished Chrome-Matte Black***	115.893.14.1	390.00
		Matte White-Polished Chrome-Matte White***	115.893.JT.1	390.00
		Polished Gold***	115.893.45.1	3,157.00
		White-Polished Chrome-White***	115.893.KJ.1	290.00
		Brushed Chrome-Polished Chrome-Brushed Chrome***	115.893.KX.1	427.00
		Polished Chrome-Brushed Chrome-Polished Chrome***	115.893.KY.1	427.00

Dual-Flush Hands-Free Actuators and Transformer, Sigma 2x4 Installation

Style	Material	Finish	Model No.	List Price $
Sigma10 	Stainless	Brushed Stainless Steel-Polished Stainless Steel-Brushed Stainless Steel* Vandal Resistant (AC Power with manual override)	115.856.SN.1	1025.00
		Brushed Stainless Steel-Polished Stainless Steel-Brushed Stainless Steel* Vandal Resistant (DC Power with manual override)	CR115-6SN1	1056.00
		Required Transformer for AC powered hands-free actuator (order separately)	115.861.00.1	175.00
Sigma 10 	Plastic *NEW!*	Polished Chrome-Matte Chrome* (AC Power)	CR115-7KH1	836.00
		White-Polished Chrome* (AC Power)	CR115-7KJ1	836.00
		White-Polished Gold* (AC Power)	CR115-7KK1	836.00
		White-Matte Chrome* (AC Power)	CR115-7KL1	836.00
		Black-Polished Chrome* (AC Power)	CR115-7KM1	836.00
		Matte Chrome-Polished Chrome* (AC Power)	CR115-7KN1	836.00
	Stainless	Brushed Stainless Steel-Polished Stainless Steel* (AC Power)	CR115-7SN1	897.00
		Required Transformer for AC powered hands-free actuator (order separately)	115.861.00.1	175.00
	Plastic *NEW!*	Polished Chrome-Matte Chrome* (Battery)	CR115-8KH1	860.00
		White-Polished Chrome* (Battery)	CR115-8KJ1	860.00
		White-Polished Gold* (Battery)	CR115-8KK1	860.00
		White-Matte Chrome* (Battery)	CR115-8KL1	860.00
		Black-Polished Chrome* (Battery)	CR115-8KM1	860.00
		Matte Chrome-Polished Chrome* (Battery)	CR115-8KN1	860.00
	Stainless	Brushed Stainless Steel-Polished Stainless Steel* (Battery)	CR115-8SN1	922.00
Sigma80 	Glass	Black (AC Power)	116.092.SG.1	1,713.00
		Mirror (AC Power)	116.092.SM.1	1,713.00
		Note: Sigma80 not recommended for bidet seat applications		
		Required Transformer for AC powered hands-free actuator (order separately)	115.861.00.1	175.00
		Extension mains cable (optional accessory for Sigma10 and Sigma80) length 78–3/4" (2 m)	241.831.00.1	84.00

Remote Programming Accessory for Hands-Free Actuators

	"Service Handy" remote programming device for Geberit touch-free devices	115.860.00.1	411.00

* Finishes follow this pattern = Plate-Ring-Button
** Finishes follow this pattern = Frame-Button
***Finishes follow this pattern = Frame-Button Edge Trim-Button
† Note: For tile, stone or other hard surfaced walls only!
‡ Not intended to be sold in California with 1.6 GPF units

Products marked with comply with the American Disabilities Act (ADA) when installed per the requirements of the latest ADA Accessibility Guidelines (ADAAG) and/or ICC/ANSI A117.1.

The information contained in this document is subject to change without notice.

GEBERIT INSTALLATION SYSTEMS

Systems for Wall-Hung Toilets, 2x4 Installation

Dual-Flush Buttons for Concealed Installations, Sigma 2x4 Installation

Type 01	Plastic	Alpine White	116.043.11.1	139.00
		Polished Chrome	116.043.21.1	181.00
	Plastic	Alpine White ♿	116.045.11.1	139.00
Type 10	Plastic	Matte Chrome-Polished Chrome**	116.056.KH.1	198.00
		Polished Chrome-White**	116.056.KJ.1	181.00
		Polished Chrome-Black** ***NEW!***	116.056.KM.1	198.00
Type 70	Stainless	Brushed Stainless Steel ♿	115.635.FW.1	923.00
	Glass	Lava Glass ***NEW!***	115.635.JK.1	785.00
		Grey Sand Glass ***NEW!***	115.635.JL.1	785.00
		White Glass ♿	115.635.SI.1	785.00
		Black Glass ♿	115.635.SJ.1	785.00
Rectangle	Plastic	Polished Chrome-Matte Chrome ***NEW!***	116.053.KA.1	181.00
		Black-Chrome ***NEW!***	116.053.KV.1	181.00
	Zinc	Brushed Chrome ***NEW!***	116.053.GH.1	313.00
	Plastic	Polished Chrome ***NEW!***	116.054.21.1	181.00

Single-Flush Buttons for Concealed Installations, Sigma 2x4 Installation

Style	Material	Finish	Model No.	List Price $
Type 01‡	Plastic	Alpine White	116.041.11.1	119.00
		Polished Chrome	116.041.21.1	139.00

Extension Hoses for Flush Button Installations

(For Flush Buttons located beyond 6' from carrier)

	Double pneumatic hose for dual-flush 78.74" (2 m) (Blue/Clear for Type01/Type10/Rectangle)	240.575.00.1	10.00
	Double pneumatic hose, 78.74" (2 m), dual-flush (Green/Clear for Type70)	243.297.00.1	10.00
	Pneumatic hose 137.80" (3.5 m) for single flush	256.000.00.1	9.00

Cover Plates for Concealed Tank, Sigma 2x4 Installation, for use with Flush Buttons

	Glass	White	115.766.SI.1	243.00
	Stainless	Brushed Stainless Steel Vandal Resistant	115.764.FW.1	194.00
		Customizable	115.766.00.1	194.00
	Plastic	Alpine White	115.768.11.1	85.00
		Polished Chrome	115.768.21.1	111.00
		Matte Chrome	115.768.46.1	111.00

Surface Even Cover Plates for Sigma Concealed Tank, 2x4 Installation, for use with Flush Buttons

	Plastic	Customizable†	115.696.00.1	243.00
		Customizable with frame†	115.697.00.1	306.00
		Note: Required accessory kit 243.168.00.1 is included with 111.597.00.1 and 111.798.00.1 carrier.		

* Finishes follow this pattern = Plate-Ring-Button
** Finishes follow this pattern = Frame-Button
***Finishes follow this pattern = Frame-Button Edge Trim-Button
† Note: For tile, stone or other hard surfaced walls only!
‡ Not intended to be sold in California with 1.6 GPF units

The information contained in this document is subject to change without notice.



The information contained in this document is subject to change without notice.

GEBERIT INSTALLATION SYSTEMS

Systems for Wall-Hung Toilets, Pre-Wall, 2x6 Installation

Geberit Duofix Carrier, Omega 2x6 Installation

Model No.	Description	List Price $
111.012.00.1	Carrier frame with 1.6/0.8 GPF Omega Concealed Tank, pre-wall installations	655.00
111.018.00.1	Carrier frame with 1.28/0.8 GPF Omega Concealed Tank, pre-wall installation	655.00

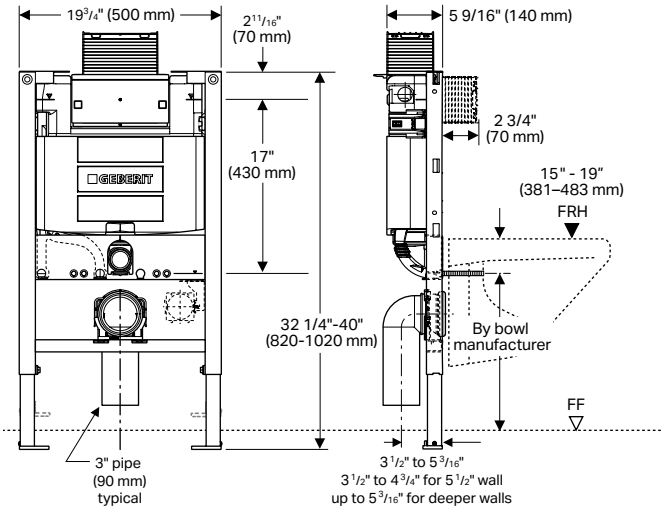

NOTES:
1. Concealed tank shipped dual-flush ready
2. Carrier for 2-hole washdown style wall-hung toilet fixtures only
3. Refer to **geberit.us** for latest list of code approved compatible toilet fixtures, including certified WaterSense® combinations

Note: For System Accessories see pages 26-28.

Dual-Flush Actuators, Omega 2x6 Installation

Style	Material	Finish	Model No.	List Price $
Omega20	Plastic	Polished Chrome/ Matte Chrome/Polished Chrome*	115.085.KH.1	308.00
		White/Polished Chrome/White*	115.085.KJ.1	227.00
		White/Gold-Plated/White*	115.085.KK.1	250.00
		Black/Polished Chrome/Black	115.085.KM.1	250.00
		Matte Chrome/ Polished Chrome/Matte Chrome*	115.085.JQ.1	308.00
Omega30	Plastic	Polished Chrome/Matte Chrome/ Polished Chrome***	115.080.KH.1	308.00
		White/Polished Chrome/White***	115.080.KJ.1	227.00
		White/Gold-Plated/White***	115.080.KK.1	250.00
		Black/Polished Chrome/Black***	115.080.KM.1	250.00
		Matte Chrome/Polished Chrome/ Matte Chrome***	115.080.JQ.1	308.00
Omega60	Zinc	Brushed Chrome	115.081.GH.1	897.00
	Glass	Lava Glass ***NEW!***	115.081.JK.1	897.00
		Grey Sand Glass ***NEW!***	115.081.JL.1	897.00
		White Glass/Aluminum	115.081.SI.1	897.00
		Black Glass/Aluminum	115.081.SJ.1	897.00
	Zinc	Cover frame (when needed) Brushed Chrome	115.086.GH.1	197.00
		Cover frame (when needed) Polished Chrome	115.086.21.1	197.00

Dual-Flush Buttons for Concealed Installations, Omega 2x6 Installation

Style	Material	Finish	Model No.	List Price $
Type 01	Plastic	Alpine White	116.042.11.1	139.00
		Polished Chrome	116.042.21.1	181.00
		Alpine White	116.044.11.1	139.00
Type 10	Plastic	Matte Chrome-Polished Chrome**	116.055.KH.1	198.00
		Polished Chrome-White**	116.055.KJ.1	181.00
		Polished Chrome-Black** ***NEW!***	116.055.KM.1	198.00
Type 70	Stainless	Brushed Stainless Steel	115.084.FW.1	923.00
	Glass	Lava Glass ***NEW!***	115.084.JK.1	785.00
		Grey Sand Glass ***NEW!***	115.084.JL.1	785.00
		White Glass	115.084.SI.1	785.00
		Black Glass	115.084.SJ.1	785.00
Rectangle	Plastic	Polished Chrome-Matte Chrome**	116.051.KA.1	181.00
		Black-Chrome ***NEW!***	116.051.KV.1	181.00
	Zinc	Brushed Chrome	116.051.GH.1	313.00
	Plastic	Polished Chrome	116.052.21.1	181.00

Dual-Flush Buttons for Furniture Installations, Omega 2x6 Installation

Type 01	Plastic	Alpine White	116.050.11.1	139.00
		Polished Chrome	116.050.21.1	181.00
		Matte Chrome	116.050.46.1	181.00
Type 10	Plastic	Matte Chrome-Polished Chrome**	116.057.KH.1	198.00
		Polished Chrome-White**	116.057.KJ.1	181.00

Single-Flush Buttons for Concealed Installations, Omega 2x6 Installation

Type 01‡	Plastic	Alpine White	116.040.11.1	119.00
		Polished Chrome	116.040.21.1	139.00

Extension Hoses for Flush Button Installations

(For Flush Buttons located beyond 6' from carrier)

Double pneumatic hose for dual flush 78.74" (2 m) (Blue/Clear for Type01/Type10/Rectangle)	240.575.00.1	10.00
Double pneumatic hose, 78.74" (2 m), dual-flush (Green/Clear for Type 70)	243.297.00.1	10.00
Pneumatic hose 137.80" (3.5 m) for single flush	256.000.00.1	9.00

Cover Plates for Omega Concealed Tank Pre-wall, 2x6 Installation for use with Flush Buttons

Glass	White	115.082.SI.1	212.00
Plastic	Customizable	115.082.00.1	243.00

Surface Even Cover Plates for Omega Concealed Tank, 2x6 Installation, for use with Flush Buttons

Plastic	Customizable + rough-in kit†	115.087.00.1	243.00
	Customizable with frame + rough-in kit†	115.088.00.1	306.00
	Note: Includes required accessory kit.		

* Finishes follow this pattern = Plate-Ring-Button
** Finishes follow this pattern = Frame-Button
*** Finishes follow this pattern = Frame-Button Edge Trim-Button
† Note: For tile, stone or other hard surfaced walls only!
‡ Not intended to be sold in California with 1.6 GPF units

The information contained in this document is subject to change without notice.

Products marked with comply with the American Disabilities Act (ADA) when installed per the requirements of the latest ADA Accessibility Guidelines (ADAAG) and/or ICC/ANSI A117.1.

GEBERIT INSTALLATION SYSTEMS

Systems for Wall-Hung Urinals

Geberit Duofix Carrier

Model No.	Description	List Price $
111.625.00.1	Carrier frame with rough-in box	666.00

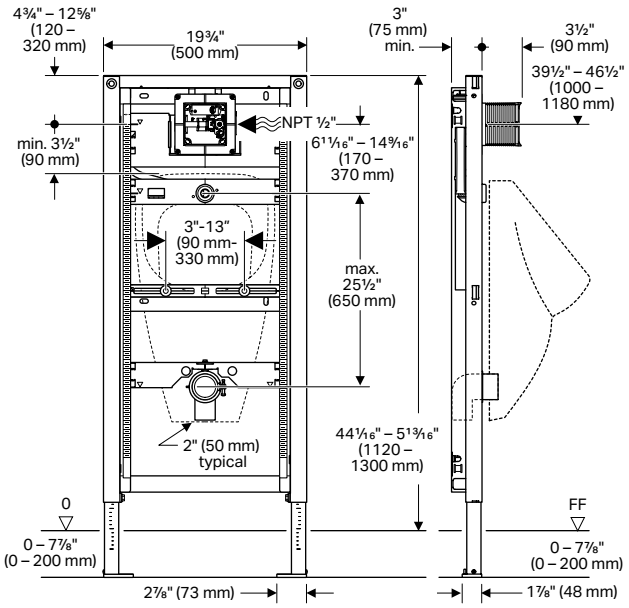

NOTES:
1. Carrier for 2-hole "Euro" style wall-hung urinal fixtures only
2. ASSE 1001 Certified Atmospheric Vacuum Breaker included.
3. Not intended to be sold in California unless paired with 0.125 GPF or less Geberit urinal flush control.
4. Refer to **geberit.us** for latest list of code-approved compatible urinal fixtures.

Note: For System Accessories see pages 26-28.

Products marked with comply with the American Disabilities Act (ADA) when installed per the requirements of the latest ADA Accessibility Guidelines (ADAAG) and/or ICC/ANSI A117.1.

The information contained in this document is subject to change without notice.

Actuators

0.5 GPF (1.9 LPF) flush volume

Style	Material	Finish	Model No.	List Price $
Type 50 	Zinc	Customer supplied inlay	116.016.00.5	635.00
		Alpine White	116.016.11.5	635.00
		Black	116.016.DW.5	635.00
		Brushed Chrome	116.016.GH.5	880.00
	Glass	Lava Glass ***NEW!***	116.016.JK.5	740.00
		Grey Sand Glass ***NEW!***	116.016.JL.5	740.00
Type 10 	Stainless	Brushed Stainless Steel	116.015.SN.1	434.00
Type 30 	Plastic	Polished Chrome-Matte Chrome-Polished Chrome***	116.017.KH.1	434.00
		White-Polished Chrome-White***	116.017.KJ.1	434.00

Hands-Free Actuators

0.5 GPF (1.9 LPF) flush volume

Style	Material	Finish	Model No.	List Price $
Type 10 	Stainless	Brushed Stainless Steel (Battery/DC Power)	116.035.SN.1	1005.00
		Brushed Stainless Steel (AC Power – CLASS 2 power supply transformer included)	116.025.SN.1	1005.00
Type 50 	Zinc ***NEW!***	Chrome-Brushed** (AC Power – CLASS 2 power supply transformer included)	116.026.GH.1	1,294.00
		Red Gold-Brushed** (AC Power – CLASS 2 power supply transformer included)	116.026.QB.1	1,673.00
		Black Chrome-Brushed** (AC Power – CLASS 2 power supply transformer included)	116.026.QD.1	1,673.00
		Brass-Brushed** (AC Power – CLASS 2 power supply transformer included)	116.026.QF.1	1,673.00
		Chrome-Brushed ** (Battery/DC Power)	116.036.GH.1	1,294.00
		Red Gold-Brushed** (Battery/DC Power)	116.036.QB.1	1,673.00
		Black Chrome-Brushed** (Battery/DC Power)	116.036.QD.1	1,673.00
		Brass-Brushed** (Battery/DC Power)	116.036.QF.1	1,673.00

Hands-Free Actuators

0.13 GPF (0.5 LPF) flush volume

Style	Material	Finish	Model No.	List Price $
	NEW!	Rough-in set for AC (REQUIRED accessory)	116.028.00.1	760.00
		Rough-in set for (Battery/DC Power) (REQUIRED accessory)	116.038.00.1	760.00
Type 10 	Stainless ***NEW!***	Cover frame (optional accessory), Brushed Stainless Steel-Polished Stainless Steel* (AC/DC Power)	241.925.SN.1	208.00
Type 50 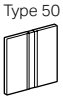	Zinc ***NEW!***	Cover frame (optional accessory), Chrome-Brushed* (AC/DC Power)	241.926.GH.1	208.00
		Cover frame (optional accessory), Red Gold-Brushed* (AC/DC Power)	241.926.QB.1	549.00
		Cover frame (optional accessory), Black Chrome-Brushed* (AC/DC Power)	241.926.QD.1	549.00
		Cover frame (optional accessory), Brass-Brushed* (AC/DC Power)	241.926.QF.1	549.00

Remote Programming Accessory for Hands-Free Actuators

	"Service Handy" remote programming device for Geberit touch-free devices	115.860.00.1	411.00

NOTE :
Actuators and Hands-Free Actuators are not intended to be sold in California.

GEBERIT INSTALLATION SYSTEMS

Systems for Wall-Hung Bidets, Lavatories

Geberit Duofix Bidet Carriers

Model No.	Description	List Price $
111.520.00.1	Carrier frame, standard height	516.00

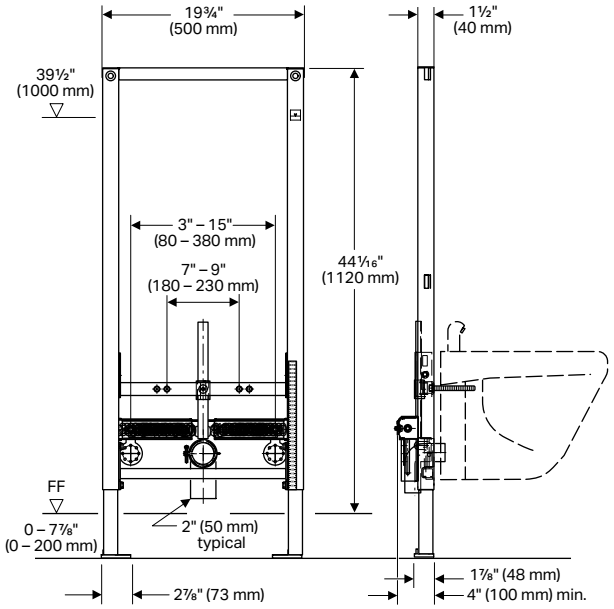

Model No.	Description	List Price $
111.524.00.1	Carrier frame, short height (matches 111.012.00.1)	516.00

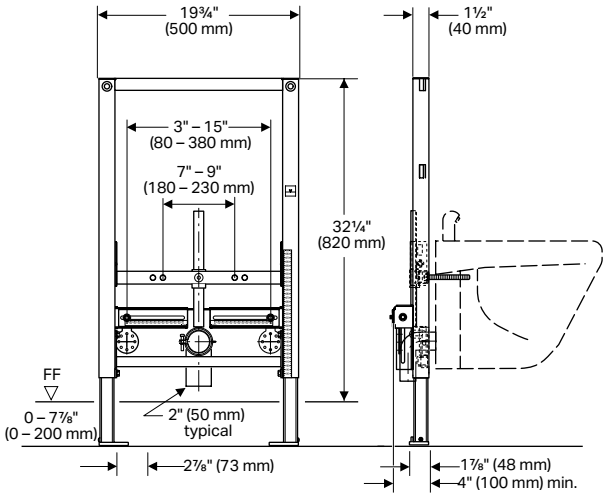

NOTES:
1. Geberit Duofix Carrier for 2-hole wall-hung bidet fixtures only
2. Refer to **geberit.us** for latest list of code-approved compatible bidet fixtures

Note: For System Accessories see pages 26-28.

Geberit Duofix Lavatory Carrier

Model No.	Description	List Price $
111.490.00.1	Carrier frame, short height (matches 111.012.00.1)	323.00

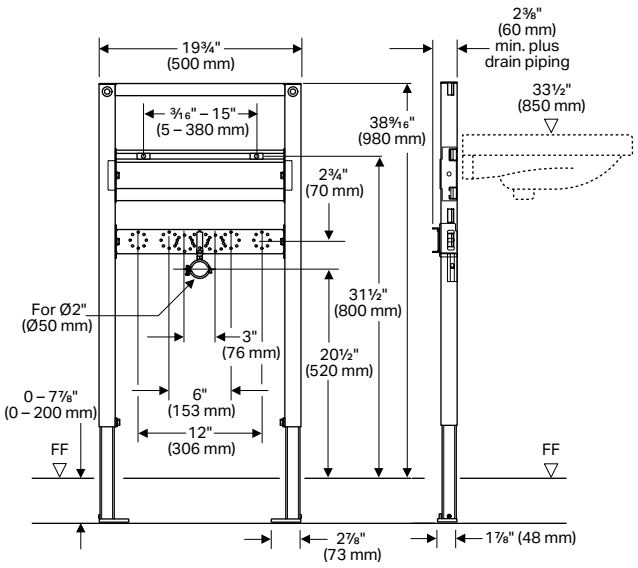

NOTES:
1. Geberit Duofix Carrier for 2-hole wall-hung lavatory fixtures only
2. Refer to **geberit.us** for latest list of code-approved compatible lavatory fixtures

Note: For Lavatory Trap System see page 38.

Products marked with ♿ comply with the American Disabilities Act (ADA) when installed per the requirements of the latest ADA Accessibility Guidelines (ADAAG) and/or ICC/ANSI A117.1.

The information contained in this document is subject to change without notice.



The information contained in this document is subject to change without notice.

GEBERIT FLUSHING SYSTEM

Systems for Floor-Mounted, Back Outlet Toilets, 2x6 Installation

Concealed Tank, Sigma 2x6 Installation

Model No.	Description	List Price $
109.304.00.5	1.6/0.8 GPF Sigma Concealed Tank 2x6 Installation	442.00
109.307.00.5	1.28/0.8 GPF Sigma Concealed Tank 2x6 Installation	442.00

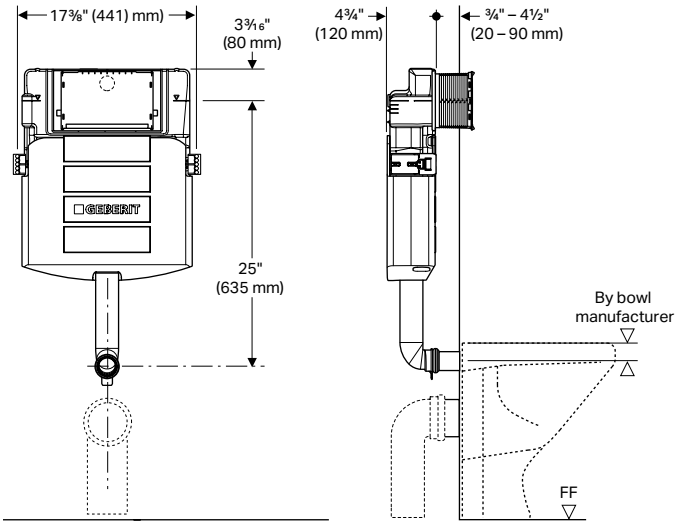

NOTES:
1. Concealed tank shipped dual-flush ready
2. Tank for floor-mounted, back outlet washdown style toilet fixtures only
3 Refer to **geberit.us** for latest list of code approved compatible toilet fixtures, including certified WaterSense® combinations

Note: For System Accessories see pages 26-28.

Dual-Flush Actuators, Sigma 2x6 Installation

Style	Material	Finish	Model No.	List Price $
Sigma01	Plastic	Alpine White	115.770.11.5	104.00
		Polished Chrome	115.770.21.5	143.00
		Matte Chrome	115.770.JQ.5	143.00
		Brass Galvanized *NEW!*	115.770.DT.5	456.00
		Jet Black *NEW!*	115.770.DW.5	126.00
Sigma20	Stainless	Brushed Nickel-Polished Nickel-Brushed Nickel*	115.882.ID.1	294.00
		Brushed Stainless Steel-Polished Stainless Steel-Brushed Stainless Steel*	115.882.SN.1	295.00
		Brushed Nickel-Polished Nickel-Brushed Nickel* Vandal Resistant	115.889.ID.1	343.00
		Brushed Stainless Steel-Polished Stainless Steel-Brushed Stainless Steel* Vandal Resistant	115.889.SN.1	343.00
	Plastic	White Matte Coated-White *NEW!*	115.882.01.1	261.00
		White-Matte White *NEW!*	115.882.11.1	152.00
		Matte Black-Polished Chrome-Matte Black*	115.882.14.1	261.00
		Black Matte Coated-Black *NEW!*	115.882.16.1	261.00
		Black-Matte Black *NEW!*	115.882.DW.1	187.00
		Matte Chrome-Polished Chrome-Matte Chrome*	115.882.JQ.1	284.00
		Matte White-Polished Chrome-Matte White*	115.882.JT.1	261.00
		Polished Chrome-Matte Chrome-Polished Chrome*	115.882.KH.1	219.00
		White-Polished Chrome-White*	115.882.KJ.1	152.00
		White-Polished Gold-White*	115.882.KK.1	422.00
		Black-Polished Chrome-Black*	115.882.KM.1	187.00

Concealed Tank, Sigma 2x6 Installation (continued)

Style	Material	Finish	Model No.	List Price $
Sigma21	Zinc PVD Red Gold Color *NEW!*	Customizable	115.650.00.1	724.00
		Mustang Slate	115.650.JM.1	905.00
		Concrete Look	115.650.JV.1	905.00
		Black Walnut	115.650.JX.1	1,234.00
		White	115.650.SI.1	795.00
		Black	115.650.SJ.1	795.00
Sigma21	Zinc PVD Black Chrome Color *NEW!*	Customizable	115.651.00.1	724.00
		Mustang Slate	115.651.JM.1	905.00
		Concrete Look	115.651.JV.1	905.00
		Black Walnut	115.651.JX.1	1,234.00
		White	115.651.SI.1	795.00
		Black	115.651.SJ.1	795.00
	Zinc PVD Brass Color *NEW!*	Customizable	115.652.00.1	724.00
		Mustang Slate	115.652.JM.1	905.00
		Concrete Look	115.652.JV.1	905.00
		Black Walnut	115.652.JX.1	1,234.00
		White	115.652.SI.1	795.00
		Black	115.652.SJ.1	795.00
	Zinc Chrome Color	Camel *NEW!*	115.761.00.4	552.00
		Beige *NEW!*	115.761.00.5	552.00
		Grey Linen *NEW!*	115.761.00.6	552.00
		Dark Rock *NEW!*	115.761.00.7	552.00
		Concrete Look *NEW!*	115.884.JV.1	552.00
		Black Walnut *NEW!*	115.884.JX.1	867.00
		Customer supplied overlay	115.884.00.1	434.00
		Lava Glass *NEW!*	115.884.JK.1	558.00
		Grey Sand Glass *NEW!*	115.884.JL.1	558.00
		Mustang Slate	115.884.JM.1	558.00
		White Glass	115.884.SI.1	558.00
		Black Glass	115.884.SJ.1	558.00
Sigma30	Plastic	White Matte Coated-Coated-White *NEW!*	115.883.01.1	289.00
		White-Matte White *NEW!*	115.883.11.1	176.00
		Matte Black-Polished Chrome-Matte Black***	115.883.14.1	289.00
		Black Matte Coated-Black *NEW!*	115.883.16.1	289.00
		Black-Matte Black *NEW!*	115.883.DW.1	198.00
		Matte Chrome-Polished Chrome-Matte Chrome***	115.883.JQ.1	302.00
		Matte White-Polished Chrome-Matte White***	115.883.JT.1	289.00
		Polished Chrome-Matte Chrome-Polished Chrome***	115.883.KH.1	246.00
		White-Polished Chrome-White***	115.883.KJ.1	154.00
		White-Polished Gold-White***	115.883.KK.1	198.00
		Black-Polished Chrome-Black***	115.883.KM.1	198.00

Products marked with ♿ comply with the American Disabilities Act (ADA) when installed per the requirements of the latest ADA Accessibility Guidelines (ADAAG) and/or ICC/ANSI A117.1.

The information contained in this document is subject to change without notice.

Concealed Tank, Sigma 2x6 Installation (continued)

Style	Material	Finish	Model No.	List Price $
Sigma50 	Zinc PVD Red Gold Color *NEW!*	Customizable	115.670.00.2	724.00
		White	115.670.11.2	724.00
		Black	115.670.DW.2	724.00
		Mustang Slate	115.670.JM.2	905.00
		Concrete Look	115.670.JV.2	905.00
		Black Walnut	115.670.JX.2	1,234.00
	Zinc PVD Black Chrome Color *NEW!*	Customizable	115.671.00.2	724.00
		White	115.671.11.2	724.00
		Black	115.671.DW.2	724.00
		Mustang Slate	115.671.JM.2	905.00
		Concrete Look	115.671.JV.2	905.00
		Black Walnut	115.671.JX.2	1,234.00
	Zinc PVD Brass Color *NEW!*	Customizable	115.672.00.2	724.00
		White	115.672.11.2	724.00
		Black	115.672.DW.2	724.00
		Mustang Slate	115.672.JM.2	905.00
		Concrete Look	115.672.JV.2	905.00
		Black Walnut	115.672.JX.2	1,234.00
Sigma50 	Zinc Chrome Color	Concrete Look *NEW!*	115.788.JV.2	552.00
		Black Walnut *NEW!*	115.788.JX.2	867.00
		Customizable	115.788.00.2	434.00
		White	115.788.11.2	434.00
		Bright Chrome	115.788.21.2	558.00
		Black	115.788.DW.2	434.00
		Brushed Chrome	115.788.GH.2	558.00
		Lava Glass *NEW!*	115.788.JK.2	558.00
		Grey Sand Glass *NEW!*	115.788.JL.2	558.00
		Mustang Slate	115.788.JM.2	558.00
		Smoked Glass	115.788.SD.2	558.00
Sigma60† 	Zinc	Brushed Chrome	115.640.GH.1	731.00
	Glass	Lava Glass *NEW!*	115.640.JK.1	731.00
		Grey Sand Glass *NEW!*	115.640.JL.1	731.00
		White Glass	115.640.SI.1	731.00
		Black Glass	115.640.SJ.1	731.00
		Rough-in set (REQUIRED accessory)	243.168.00.1	18.00
		Cover frame (optional accessory) Polished Chrome	115.641.21.1	197.00
		Cover frame (optional accessory) Brushed Chrome	115.641.GH.1	197.00
Sigma70 	Plastic	Customizable	115.620.00.1	619.00
	Stainless	Brushed Stainless Steel	115.620.FW.1	820.00
	Glass	Lava Glass *NEW!*	115.620.JK.1	724.00
		Grey Sand Glass *NEW!*	115.620.JL.1	724.00
		White Glass	115.620.SI.1	724.00
		Black Glass	115.620.SJ.1	724.00

Single-Flush Actuators, Sigma 2x6 Installation

Style	Material	Finish	Model No.	List Price $
Sigma10‡ 	Stainless	Matte Black-Polished Chrome-Matte Black*	115.758.14.5	409.00
		Matte White-Polished Chrome-Matte White*	115.758.JT.5	409.00
		Brushed Stainless Steel-Polished Stainless Steel-Brushed Stainless Steel*	115.758.SN.5	299.00
		Brushed Stainless Steel-Polished Stainless Steel-Brushed Stainless Steel* Vandal Resistant	115.787.SN.5	339.00

Single-Flush Actuators, Sigma 2x6 Installation (continued)

Style	Material	Finish	Model No.	List Price $
Sigma10‡ 	Plastic	Polished Chrome-Matte Chrome-Polished Chrome*	115.758.KH.5	219.00
		White-Polished Chrome-White*	115.758.KJ.5	153.00
		White-Polished Gold-White*	115.758.KK.5	435.00
		Black-Polished Chrome-Black*	115.758.KM.5	187.00
		Matte Chrome-Polished Chrome-Matte Chrome*	115.758.JQ.5	219.00
Sigma30‡ 	Zinc	Matte Black-Polished Chrome-Matte Black***	115.893.14.1	390.00
		Matte White-Polished Chrome-Matte White***	115.893.JT.1	390.00
		Polished Gold***	115.893.45.1	3,157.00
		White-Polished Chrome-White***	115.893.KJ.1	290.00
		Brushed Chrome-Polished Chrome-Brushed Chrome***	115.893.KX.1	427.00
		Polished Chrome-Brushed Chrome-Polished Chrome***	115.893.KY.1	427.00

Dual-Flush Hands-Free Actuators and Transformer, Sigma 2x6 Installation

Style	Material	Finish	Model No.	List Price $
Sigma10 	Stainless	Brushed Stainless Steel-Polished Stainless Steel-Brushed Stainless Steel* Vandal Resistant (AC Power with manual override)	115.890.SN.5	1025.00
		Brushed Stainless Steel-Polished Stainless Steel-Brushed Stainless Steel* Vandal Resistant (Battery/DC Power with manual override)	115.891.SN.5	1056.00
Sigma 10 	Plastic	Polished Chrome-Matte Chrome* (AC Power)	115.907.KH.1	836.00
		White-Polished Chrome* (AC Power)	115.907.KJ.1	836.00
		White-Polished Gold* (AC Power)	115.907.KK.1	836.00
		White-Matte Chrome* (AC Power)	115.907.KL.1	836.00
		Black-Polished Chrome* (AC Power)	115.907.KM.1	836.00
		Matte Chrome-Polished Chrome* (AC Power)	115.907.KN.1	836.00
	Stainless	Brushed Stainless Steel-Polished Stainless Steel* (AC Power)	115.907.SN.1	897.00
		Required Transformer for AC powered hands-free actuator (order separately)	115.861.00.1	175.00
	Plastic	Polished Chrome-Matte Chrome* (Battery)	115.908.KH.1	860.00
		White-Polished Chrome* (Battery)	115.908.KJ.1	860.00
		White-Matte Chrome* (Battery)	115.908.KL.1	860.00
		White-Polished Gold* (Battery)	115.908.KK.1	860.00
		Black-Polished Chrome* (Battery)	115.908.KM.1	860.00
		Matte Chrome-Polished Chrome* (Battery)	115.908.KN.1	860.00
	Stainless	Brushed Stainless Steel-Polished Stainless Steel* (Battery)	115.908.SN.1	922.00
Sigma80 	Glass	Black (AC Power)	116.090.SG.1	1,713.00
		Mirror (AC Power)	116.090.SM.1	1,713.00
		Note: Sigma80 not recommended for bidet seat applications		
		Required Transformer for AC powered hands-free actuator (order separately)	115.861.00.1	175.00
		Extension mains cable (optional accessory for Sigma10 and Sigma80) length 78–3/4" (2 m)	241.831.00.1	84.00

Remote Programming Accessory for Hands-Free Actuators

	"Service Handy" remote programming device for Geberit touch-free devices	115.860.00.1	411.00

* Finishes follow this pattern = Plate-Ring-Button
** Finishes follow this pattern = Frame-Button
***Finishes follow this pattern = Frame-Button Edge Trim-Button
† Note: For tile, stone or other hard surfaced walls only!
‡ Not intended to be sold in California with 1.6 GPF units

The information contained in this document is subject to change without notice.

Products marked with comply with the American Disabilities Act (ADA) when installed per the requirements of the latest ADA Accessibility Guidelines (ADAAG) and/or ICC/ANSI A117.1.

GEBERIT FLUSHING SYSTEM

Systems for Floor-Mounted, Back Outlet Toilets, 2x6 Installation

Dual-Flush Buttons for Concealed Installations, Sigma 2x6 Installation

Style	Material	Finish	Model No.	List Price $
Type 01 	Plastic	Alpine White	116.042.11.1	139.00
		Polished Chrome	116.042.21.1	181.00
	Plastic	Alpine White ♿	116.044.11.1	139.00
Type 10 	Plastic	Matte Chrome-Polished Chrome**	116.055.KH.1	198.00
		Polished Chrome-White**	116.055.KJ.1	181.00
		Polished Chrome-Black** ***NEW!***	116.055.KM.1	198.00
Type 70	Stainless	Brushed Stainless Steel ♿	115.630.FW.1	923.00
	Glass	Lava Glass ***NEW!***	115.630.JK.1	785.00
		Grey Sand Glass ***NEW!***	115.630.JL.1	785.00
		White Glass ♿	115.630.SI.1	785.00
		Black Glass ♿	115.630.SJ.1	785.00
Rectangle	Plastic	Polished Chrome-Matte Chrome**	116.051.KA.1	181.00
		Black-Chrome ***NEW!***	116.051.KV.1	181.00
	Zinc	Brushed Chrome	116.051.GH.1	313.00
	Plastic	Polished Chrome ♿	116.052.21.1	181.00

Dual-Flush Buttons for Furniture Installations, Sigma 2x6 Installation

Style	Material	Finish	Model No.	List Price $
Type 01 	Plastic	Alpine White	116.050.11.1	139.00
		Polished Chrome	116.050.21.1	181.00
		Matte Chrome	116.050.46.1	181.00
Type 10 	Plastic	Matte Chrome-Polished Chrome**	116.057.KH.1	198.00
		Polished Chrome-White**	116.057.KJ.1	181.00

Single-Flush Buttons for Concealed Installations, Sigma 2x6 Installation

Style	Material	Finish	Model No.	List Price $
Type 01‡ 	Plastic	Alpine White	116.040.11.1	119.00
		Polished Chrome	116.040.21.1	139.00

Extension Hoses for Flush Button Installations

(For Flush Buttons located beyond 6' from carrier)

	Double pneumatic hose for dual-flush 78.74" (2 m) (Blue/Clear for Type01/Type10/Rectangle)	240.575.00.1	10.00
	Double pneumatic hose, 78.74" (2 m), dual-flush (Green/Clear for Type70)	243.297.00.1	10.00
	Pneumatic hose 137.80" (3.5 m) for single flush	256.000.00.1	9.00

Cover Plates for Sigma Concealed Tank, Sigma 2x6 Installation, for use with Flush Buttons

	Glass	White	115.766.SI.1	243.00
	Stainless	Brushed Stainless Steel Vandal Resistant	115.764.FW.1	194.00
		Customizable	115.766.00.1	194.00
	Plastic	Alpine White	115.768.11.1	85.00
		Polished Chrome	115.768.21.1	111.00
		Matte Chrome	115.768.46.1	111.00

Surface Even Cover Plates for Sigma Concealed Tank, 2x6 Installation, for use with Flush Buttons

	Plastic	Customizable†	115.696.00.1	243.00
		Customizable with frame†	115.697.00.1	306.00
		Rough-in set (REQUIRED accessory. Purchase with one of above)	243.168.00.1	18.00

* Finishes follow this pattern = Plate-Ring-Button
** Finishes follow this pattern = Frame-Button
***Finishes follow this pattern = Frame-Button Edge Trim-Button
† Note: For tile, stone or other hard surfaced walls only!
‡ Not intended to be sold in California with 1.6 GPF units

The information contained in this document is subject to change without notice.



GEBERIT INSTALLATION SYSTEMS

Systems for Floor-Mounted, Back Outlet Toilets, 2x4 Installation

Geberit Duofix Carrier, Sigma 2x4 Installation

Model No.	Description	List Price $
109.797.00.1	1.6/0.8 GPF Sigma Concealed Tank 2x4 Installation	576.00

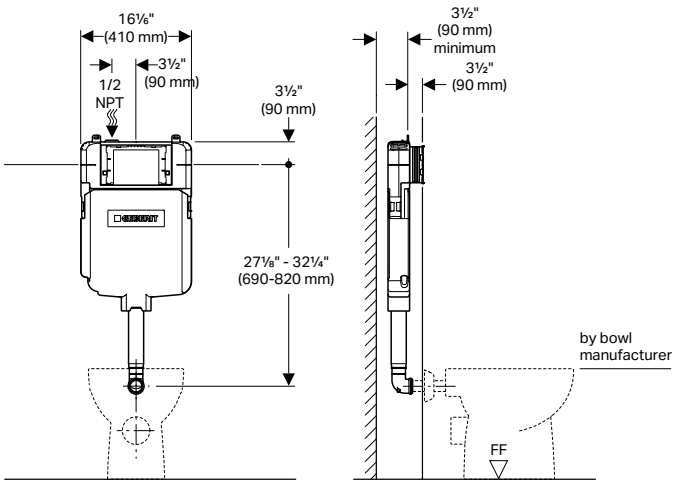

NOTES:
1. Concealed tank shipped dual-flush ready
2. Geberit Duofix Carrier for 2-hole washdown style wall-hung toilet fixtures only
3. Refer to **geberit.us** for latest list of Code approved Compatible toilet fixtures, including certified WaterSense® combinations

Note: For System Accessories see pages 26-28.

Dual-Flush Actuators, Sigma 2x4 Installation

Style	Material	Finish	Model No.	List Price $
Sigma01 	Plastic	Alpine White	115.770.11.5	104.00
		Polished Chrome	115.770.21.5	143.00
		Matte Chrome	115.770.JQ.5	143.00
		Brass Galvanized ***NEW!***	115.770.DT.5	456.00
		Jet Black ***NEW!***	115.770.DW.5	126.00
Sigma20 	Stainless	Brushed Nickel-Polished Nickel-Brushed Nickel*	115.882.ID.1	294.00
		Brushed Stainless Steel-Polished Stainless Steel-Brushed Stainless Steel*	115.882.SN.1	295.00
		Brushed Nickel-Polished Nickel-Brushed Nickel* Vandal Resistant	115.889.ID.1	343.00
		Brushed Stainless Steel-Polished Stainless Steel-Brushed Stainless Steel* Vandal Resistant	115.889.SN.1	343.00
	Plastic	White Matte Coated-White ***NEW!***	115.882.01.1	261.00
		White-Matte White ***NEW!***	115.882.11.1	152.00
		Matte Black-Polished Chrome-Matte Black*	115.882.14.1	261.00
		Black Matte Coated-Black ***NEW!***	115.882.16.1	261.00
		Black-Matte Black ***NEW!***	115.882.DW.1	187.00
		Matte Chrome-Polished Chrome-Matte Chrome*	115.882.JQ.1	284.00
		Matte White-Polished Chrome-Matte White*	115.882.JT.1	261.00
		Polished Chrome-Matte Chrome-Polished Chrome*	115.882.KH.1	219.00
		White-Polished Chrome-White*	115.882.KJ.1	152.00
		White-Polished Gold-White*	115.882.KK.1	422.00
		Black-Polished Chrome-Black*	115.882.KM.1	187.00

Dual-Flush Actuators, Sigma 2x4 Installation (continued)

Style	Material	Finish	Model No.	List Price $
Sigma21 	Zinc PVD Red Gold Color ***NEW!***	Customizable	115.650.00.1	724.00
		Mustang Slate	115.650.JM.1	905.00
		Concrete Look	115.650.JV.1	905.00
		Black Walnut	115.650.JX.1	1,234.00
		White	115.650.SI.1	795.00
		Black	115.650.SJ.1	795.00
	Zinc PVD Black Chrome Color ***NEW!***	Customizable	115.651.00.1	724.00
		Mustang Slate	115.651.JM.1	905.00
		Concrete Look	115.651.JV.1	905.00
		Black Walnut	115.651.JX.1	1,234.00
		White	115.651.SI.1	795.00
		Black	115.651.SJ.1	795.00
	Zinc PVD Brass Color ***NEW!***	Customizable	115.652.00.1	724.00
		Mustang Slate	115.652.JM.1	905.00
		Concrete Look	115.652.JV.1	905.00
		Black Walnut	115.652.JX.1	1,234.00
		White	115.652.SI.1	795.00
		Black	115.652.SJ.1	795.00
	Zinc Chrome Color	Camel ***NEW!***	115.761.00.4	552.00
		Beige ***NEW!***	115.761.00.5	552.00
		Grey Linen ***NEW!***	115.761.00.6	552.00
		Dark Rock ***NEW!***	115.761.00.7	552.00
		Concrete Look ***NEW!***	115.884.JV.1	552.00
		Black Walnut ***NEW!***	115.884.JX.1	867.00
		Customer supplied overlay	115.884.00.1	434.00
		Lava Glass ***NEW!***	115.884.JK.1	558.00
		Grey Sand Glass ***NEW!***	115.884.JL.1	558.00
		Mustang Slate	115.884.JM.1	558.00
		White Glass	115.884.SI.1	558.00
		Black Glass	115.884.SJ.1	558.00
Sigma30 	Plastic	White Matte Coated-Coated-White ***NEW!***	115.883.01.1	289.00
		White-Matte White ***NEW!***	115.883.11.1	176.00
		Matte Black-Polished Chrome-Matte Black***	115.883.14.1	289.00
		Black Matte Coated-Black ***NEW!***	115.883.16.1	289.00
		Black-Matte Black ***NEW!***	115.883.DW.1	198.00
		Matte Chrome-Polished Chrome-Matte Chrome***	115.883.JQ.1	302.00
		Matte White-Polished Chrome-Matte White***	115.883.JT.1	289.00
		Polished Chrome-Matte Chrome-Polished Chrome***	115.883.KH.1	246.00
		White-Polished Chrome-White***	115.883.KJ.1	154.00
		White-Polished Gold-White***	115.883.KK.1	198.00
		Black-Polished Chrome-Black***	115.883.KM.1	198.00
Sigma50 	Zinc PVD Red Gold Color ***NEW!***	Customizable	115.670.00.2	724.00
		White	115.670.11.2	724.00
		Black	115.670.DW.2	724.00
		Mustang Slate	115.670.JM.2	905.00
		Concrete Look	115.670.JV.2	905.00
		Black Walnut	115.670.JX.2	1,234.00
	Zinc PVD Black Chrome Color ***NEW!***	Customizable	115.671.00.2	724.00
		White	115.671.11.2	724.00
		Black	115.671.DW.2	724.00
		Mustang Slate	115.671.JM.2	905.00
		Concrete Look	115.671.JV.2	905.00
		Black Walnut	115.671.JX.2	1,234.00

Products marked with ♿ comply with the American Disabilities Act (ADA) when installed per the requirements of the latest ADA Accessibility Guidelines (ADAAG) and/or ICC/ANSI A117.1.

The information contained in this document is subject to change without notice.

Dual-Flush Actuators, Sigma 2x4 Installation (continued)

Style	Material	Finish	Model No.	List Price $
Sigma50 	Zinc PVD Brass Color *NEW!*	Customizable	115.672.00.2	724.00
		White	115.672.11.2	724.00
		Black	115.672.DW.2	724.00
		Mustang Slate	115.672.JM.2	905.00
		Concrete Look	115.672.JV.2	905.00
		Black Walnut	115.672.JX.2	1,234.00
	Zinc Chrome Color	Concrete Look *NEW!*	115.788.JV.2	552.00
		Black Walnut *NEW!*	115.788.JX.2	867.00
		Customizable	115.788.00.2	434.00
		White	115.788.11.2	434.00
		Bright Chrome	115.788.21.2	558.00
		Black	115.788.DW.2	434.00
		Brushed Chrome	115.788.GH.2	558.00
		Lava Glass *NEW!*	115.788.JK.2	558.00
		Grey Sand Glass *NEW!*	115.788.JL.2	558.00
		Mustang Slate	115.788.JM.2	558.00
		Smoked Glass	115.788.SD.2	558.00
Sigma60† 	Zinc	Brushed Chrome	115.640.GH.1	731.00
	Glass	Lava Glass *NEW!*	115.640.JK.1	731.00
		Grey Sand Glass *NEW!*	115.640.JL.1	731.00
		White Glass	115.640.SI.1	731.00
		Black Glass	115.640.SJ.1	731.00
		Rough-in set (included)	243.168.00.1	18.00
		Cover frame (optional accessory) Polished Chrome	115.641.21.1	197.00
		Cover frame (optional accessory) Brushed Chrome	115.641.GH.1	197.00
Sigma70 	Plastic	Customizable	115.625.00.1	619.00
	Stainless	Brushed Stainless Steel	115.625.FW.1	820.00
	Glass	Lava Glass *NEW!*	116.625.JK.1	724.00
		Grey Sand Glass *NEW!*	116.625.JL.1	724.00
		White Glass	115.625.SI.1	724.00
		Black Glass	115.625.SJ.1	724.00

Single-Flush Actuators, Sigma 2x4 Installation

Style	Material	Finish	Model No.	List Price $
Sigma10‡ 	Stainless	Matte Black-Polished Chrome-Matte Black*	115.758.14.5	409.00
		Matte White-Polished Chrome-Matte White*	115.758.JT.5	409.00
		Brushed Stainless Steel-Polished Stainless Steel-Brushed Stainless Steel*	115.758.SN.5	299.00
		Brushed Stainless Steel-Polished Stainless Steel-Brushed Stainless Steel* Vandal Resistant	115.787.SN.5	339.00
Sigma10‡ 	Plastic	Polished Chrome-Matte Chrome-Polished Chrome*	115.758.KH.5	219.00
		White-Polished Chrome-White*	115.758.KJ.5	153.00
		White-Polished Gold-White*	115.758.KK.5	435.00
		Black-Polished Chrome-Black*	115.758.KM.5	187.00
		Matte Chrome-Polished Chrome-Matte Chrome*	115.758.JQ.5	219.00
Sigma30‡ 	Zinc	Matte Black-Polished Chrome-Matte Black***	115.893.14.1	390.00
		Matte White-Polished Chrome-Matte White***	115.893.JT.1	390.00
		Polished Gold***	115.893.45.1	3,157.00
		White-Polished Chrome-White***	115.893.KJ.1	290.00
		Brushed Chrome-Polished Chrome-Brushed Chrome***	115.893.KX.1	427.00
		Polished Chrome-Brushed Chrome-Polished Chrome***	115.893.KY.1	427.00

Dual-Flush Hands-Free Actuators and Transformer, Sigma 2x4 Installation

Style	Material	Finish	Model No.	List Price $
Sigma10 	Stainless	Brushed Stainless Steel-Polished Stainless Steel-Brushed Stainless Steel* Vandal Resistant (AC Power with manual override)	115.856.SN.1	1025.00
		Brushed Stainless Steel-Polished Stainless Steel-Brushed Stainless Steel* Vandal Resistant (DC Power with manual override)	CR115-6SN1	1056.00
		Required Transformer for AC powered hands-free actuator (order separately)	115.861.00.1	175.00
Sigma 10 	Plastic *NEW!*	Polished Chrome-Matte Chrome* (AC Power)	CR115-7KH1	836.00
		White-Polished Chrome* (AC Power)	CR115-7KJ1	836.00
		White-Polished Gold* (AC Power)	CR115-7KK1	836.00
		White-Matte Chrome* (AC Power)	CR115-7KL1	836.00
		Black-Polished Chrome* (AC Power)	CR115-7KM1	836.00
		Matte Chrome-Polished Chrome* (AC Power)	CR115-7KN1	836.00
	Stainless	Brushed Stainless Steel-Polished Stainless Steel* (AC Power)	CR115-7SN1	897.00
		Required Transformer for AC powered hands-free actuator (order separately)	115.861.00.1	175.00
	Plastic *NEW!*	Polished Chrome-Matte Chrome* and Battery Cover (Battery)	CR115-8KH1	860.00
		White-Polished Chrome* (Battery) and Battery Cover (Battery)	CR115-8KJ1	860.00
		White-Polished Gold* (Battery) and Battery Cover (Battery)	CR115-8KK1	860.00
		White-Matte Chrome* (Battery) and Battery Cover (Battery)	CR115-8KL1	860.00
		Black-Polished Chrome* (Battery) and Battery Cover (Battery)	CR115-8KM1	860.00
		Matte Chrome-Polished Chrome* and Battery Cover (Battery)	CR115-8KN1	860.00
	Stainless	Brushed Stainless Steel-Polished Stainless Steel* (Battery) and Battery Cover (Battery)	CR115-8SN1	922.00
Sigma80 	Glass	Black (AC Power)	116.092.SG.1	1,713.00
		Mirror (AC Power)	116.092.SM.1	1,713.00
		Note: Sigma80 not recommended for bidet seat applications		
		Required Transformer for AC powered hands-free actuator (order separately)	115.861.00.1	175.00
		Extension mains cable (optional accessory for Sigma10 and Sigma80) length 78–3/4" (2 m)	241.831.00.1	84.00

Remote Programming Accessory for Hands-Free Actuators

	"Service Handy" remote programming device for Geberit touch-free devices	115.860.00.1	411.00

* Finishes follow this pattern = Plate-Ring-Button
** Finishes follow this pattern = Frame-Button
***Finishes follow this pattern = Frame-Button Edge Trim-Button
† Note: For tile, stone or other hard surfaced walls only!
‡ Not intended to be sold in California with 1.6 GPF units

Products marked with comply with the American Disabilities Act (ADA) when installed per the requirements of the latest ADA Accessibility Guidelines (ADAAG) and/or ICC/ANSI A117.1.

The information contained in this document is subject to change without notice.

GEBERIT INSTALLATION SYSTEMS

Systems for Wall-Hung Toilets, 2x4 Installation

Dual-Flush Buttons for Concealed Installations, Sigma 2x4 Installation

Style	Material	Finish	Model No.	List Price $
Type 01	Plastic	Alpine White	116.043.11.1	139.00
		Polished Chrome	116.043.21.1	181.00
	Plastic	Alpine White ♿	116.045.11.1	139.00
Type 10	Plastic	Matte Chrome-Polished Chrome**	116.056.KH.1	198.00
		Poli shed Chrome-White**	116.056.KJ.1	181.00
		Polished Chrome-Black** ***NEW!***	116.056.KM.1	198.00
Type 70	Stainless	Brushed Stainless Steel ♿	115.635.FW.1	923.00
	Glass	Lava Glass ***NEW!***	115.635.JK.1	785.00
		Grey Sand Glass ***NEW!***	115.635.JL.1	785.00
		White Glass ♿	115.635.SI.1	785.00
		Black Glass ♿	115.635.SJ.1	785.00
Rectangle	Plastic	Polished Chrome-Matte Chrome ***NEW!***	116.053.KA.1	181.00
		Black-Chrome ***NEW!***	116.053.KV.1	181.00
	Zinc	Brushed Chrome ***NEW!***	116.053.GH.1	313.00
	Plastic	Polished Chrome ***NEW!***	116.0 54.21.1	175.00

Single-Flush Buttons for Concealed Installations, Sigma 2x4 Installation

Style	Material	Finish	Model No.	List Price $
Type 01‡	Plastic	Alpine White	116.041.11.1	119.00
		Polished Chrome	116.041.21.1	139.00

Extension Hoses for Flush Button Installations

(For Flush Buttons located beyond 6' from carrier)

	Double pneumatic hose for dual-flush 78.74" (2 m) (Blue/Clear for Type01/Type10/Rectangle)	240.575.00.1	10.00
	Double pneumatic hose, 78.74" (2 m), dual-flush (Green/Clear for Type70)	243.297.00.1	10.00
	Pneumatic hose 137.80" (3.5 m) for single flush	256.000.00.1	9.00

Cover Plates for Concealed Tank, Sigma 2x4 Installation, for use with Flush Buttons

	Glass	White	115.766.SI.1	243.00
	Stainless	Brushed Stainless Steel Vandal Resistant	115.764.FW.1	194.00
		Customizable	115.766.00.1	194.00
	Plastic	Alpine White	115.768.11.1	85.00
		Polished Chrome	115.768.21.1	111.00
		Matte Chrome	115.768.46.1	111.00

Surface Even Cover Plates for Sigma Concealed Tank, 2x4 Installation, for use with Flush Buttons

	Plastic	Customizable†	115.696.00.1	243.00
		Customizable with frame†	115.697.00.1	306.00
		Note: Required accessory kit 243.168.00.1 is included with 111.597.00.1 and 111.798.00.1 carrier.		

Connection Set, Sigma 2x4 Installation

	Connector set with mounting hardware (bowl installation kit), HDPE; Alpine White cover caps	152.404.11.1	50.00

* Finishes follow this pattern = Plate-Ring-Button
** Finishes follow this pattern = Frame-Button
***Finishes follow this pattern = Frame-Button Edge Trim-Button
† Note: For tile, stone or other hard surfaced walls only!
‡ Not intended to be sold in California with 1.6 GPF units

The information contained in this document is subject to change without notice.



The information contained in this document is subject to change without notice.

GEBERIT SYSTEM ACCESSORIES

Geberit Optional and Required Accessories for Installation

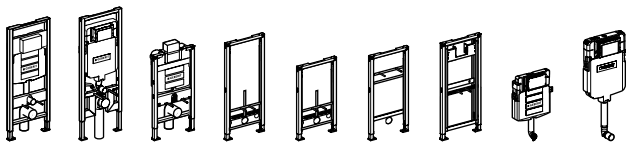

Description	Model Number	List Price $	111.335 111.902	111.798 111.597	111.012 111.018	111.520	111.524	111.490	111.625	109.304 109.307	109.797
OPTIONAL Connection Sets and Accessories for Finished Walls up to 3.5" (9cm) Thick											
 PE syphon trap with horizontal outlet and seal; Ø1.96" (Ø50 mm) outlet	152.950.11.1	40.00							✓		
 PE syphon trap with vertical outlet and seal; Ø1.97" (Ø50 mm) outlet	152.951.11.1	40.00							✓		
 Acoustic insulation set for wall-hung toilets and bidets	156.050.00.1	21.00	✓	✓	✓	✓	✓				
 Cover caps with leveling washer, plastic, Alpine White	217.713.11.1	10.00	✓	✓	✓	✓	✓	✓			
 HDPE connection set with 1" (2.5 cm) offset and mounting hardware (bowl installation kit); with socket for Ø3.50" (Ø90 mm) push fit piping and Ø55 supply inlet; Matte Chrome cover caps	405.116.00.1	252.00	✓	✓	✓					✓	✓
REQUIRED Connection Sets and Accessories for Finished Walls 3.5" - 7.0" (9-18cm) Thick											
 HDPE Connector set for extended installation and mounting hardware (bowl installation kit), with socket for Ø3.50" (Ø90 mm) push fit piping and Ø2.16" (Ø55 mm) supply inlet; Matte Chrome cover caps	152.438.46.1	63.00	✓	✓	✓					✓	✓
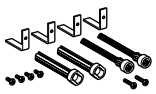 Extension set for actuator plates for Sigma Concealed Tanks 2x6 and 2x4, Kappa and Omega Concealed Tanks	240.938.00.1	28.00	✓	✓	✓					✓	✓
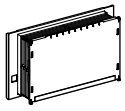 Mud guard protection housing for Sigma Concealed Tanks 2x6 and 2x4, plastic, 4 inch (10 cm)	241.826.00.1	15.00	✓	✓						✓	✓
 Mud guard protection housing and extension set for urinal carrier	241.930.00.1	22.00							✓		
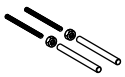 Mounting rod M12 x 10" long. Not supplied.	M12 x 10"	—	✓	✓	✓	✓	✓				
Mounting rod M10 x 10" long. Not supplied.	M10 x 10"	—						✓			
Mounting rod M8 x 10" long. Not supplied.	M8 x 10"	—							✓		

The information contained in this document is subject to change without notice.

Description		Model Number	List Price $	111.335 111.902	111.798 111.597	111.012 111.018	111.520	111.524	111.490	111.625	109.304 109.307	109.797
OPTIONAL Installation Accessories for Bidet Seats												
	Water supply hose for bidet seat for Kappa and Omega Concealed Tank pre-wall. For adding bidet seat to an installed carrier. For complete installation, must order with 249.801.00.1.	240.839.00.1	72.00			✓						
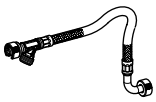	Water supply hose for bidet seat for 111.597.00.1 and 111.798.00.1 carrier with Sigma Concealed Tank 2x4. For adding bidet seat to an installed carrier. For complete installation, must order with 249.801.00.1.	243.173.00.00.1	54.00		✓							
	Water supply hose for bidet seat add-on after finished installation of Sigma 2x6 and 2x4, Kappa and Omega Concealed Tanks.	249.801.00.1	130.00	✓	✓	✓						
OPTIONAL Installation Accessories for Geberit Duofix Carrier Frames												
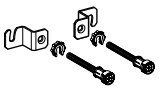	Frame to wall anchoring for 5.125"-7.875" (13-20 cm) thick unfinished pre-wall	111.013.00.1	27.00		✓							
	Frame to wall anchoring for 5.125"-7.875" (13-20 cm) thick unfinished pre-wall	111.815.00.1	39.00	✓		✓	✓	✓	✓	✓		
	Frame to wall anchoring for 5.125"-7.875" (13-20 cm) thick unfinished pre-wall corner installations	111.835.00.1	39.00	✓	✓	✓	✓	✓	✓	✓		
	Support brackets for wall-hung toilets with small contact surface (thin profiles)	111.847.00.1	54.00	✓		✓						
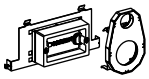	Fire protection set for Sigma Concealed Tank 90 min. fire resistance to DIN EN 1364-1:1999-10	111.863.00.1	586.00	✓								
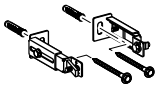	Frame to wall anchoring where foot installations into floor are not allowed for 5.125"-9.50" (13-24 cm)	111.064.00.1	74.00	✓	✓	✓	✓	✓	✓	✓		
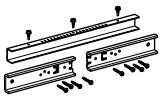	Fastening set for sinks with 14.9"-22.8" (38-58 cm) mounting centers	111.868.00.1	128.00						✓			
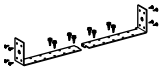	Frame to stud fastening set for extended stud spacing from 19.75"-25.56" (50-65 cm)	111.869.00.1	39.00	✓	✓	✓	✓	✓	✓	✓		
	Frame to wall anchoring extensions for 7.875"-15.75" (20-40 cm) thick (unfinished pre-wall)	111.887.00.1	17.00	✓	✓	✓	✓	✓	✓	✓		
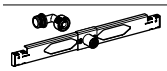	Crossbar for inlet 1/2" thread	242.042.00.1	121.00							✓		
	Retrofit adapter for inlet, 1/2" thread	242.309.00.1	121.00							✓		
	Elbow supply fitting set, Gun Metal	465.034.00.2	42.00				✓	✓	✓			

The information contained in this document is subject to change without notice.

GEBERIT SYSTEM ACCESSORIES

Geberit Optional and Required Accessories for Installation

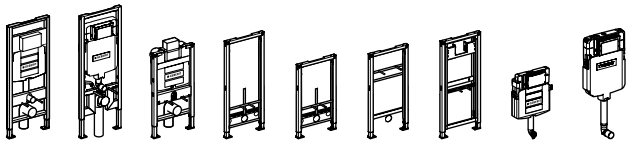

Description	Model Number	List Price $	111.335 111.902	111.798 111.597	111.012 111.018	111.520	111.524	111.490	111.625	109.304 109.307	109.797
OPTIONAL Installation Waste Fitting Accessories											
 PP connector set with bend for floor-mount toilets with mounting hardware, 1 x 90° bends with socket for Ø4.375" (Ø110 mm) push fit piping for Ø3.82"–4.21" (Ø97–107 mm) male connection and expansion to Ø4.375" (Ø110 mm) outlet	152.647.00.1	128.00								✓ (For A or B discharge. See below)	✓
 HDPE waste fitting outlet bend, 1 x 90° bend with socket for Ø3.50" (Ø90 mm) push fit piping and Ø3.50" (Ø90 mm) outlet	366.061.16.1	25.00								✓ (For A discharge. See below)	✓
 HDPE straight connector with socket for Ø3.50" (Ø90 mm) push fit piping and Ø3.50" (Ø90 mm) outlet x 12" (31 cm) long	366.887.16.1	39.00	✓	✓	✓					✓ (For A discharge. See below)	✓
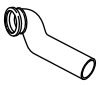 HDPE connector with offset for LH horizontal drain connections (as viewed from sitting position), 1 x 90° bend with socket for Ø3.50" (Ø90 mm) push fit piping, with 45° offset and Ø3.50" (Ø90 mm) outlet for 5.5" (13.97 cm) minimum walls only.	366.913.16.1	83.00	✓	✓	✓					✓ (For A discharge. See below)	✓
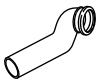 HDPE connector with offset for RH horizontal drain connections (as viewed from sitting position), 1 x 90° bend with socket for Ø3.50" (Ø90 mm) push fit piping, with 45° offset and Ø3.50" (Ø90 mm) outlet for 5.5" (13.97 cm) minimum walls only.	366.914.16.1	83.00	✓	✓	✓					✓ (For A discharge. See below)	✓
 Cast iron fitting; 90° 3.5" (90 mm) inlet, 3" outlet, 2" NPTF heel outlet	367.072.18.1	251.00	✓	✓	✓					✓ (For A discharge. See below)	✓
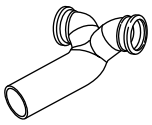 HDPE "Back-to-back" connector for horizontal drain connections; 2 x 90° bends with sockets for Ø3.50" (Ø90 mm) push fit piping, with 45° offset and expansion to Ø4.375" (Ø110 mm) outlet for 10.75" (27.31 cm) minimum walls only.	367.485.16.1	170.00	✓	✓	✓					✓ (For A or B discharge. See below)	✓
 HDPE "Back-to-back" connector for vertical drain connections; 2 x 90° bends with sockets for Ø3.50" (Ø90 mm) push fit piping and expansion to Ø4.375" (Ø110 mm) outlet for 10.75" (27.31 cm) minimum walls only.	367.923.16.1	166.00	✓	✓	✓					✓ (For A or B discharge See below)	✓

Note: Any of these fittings in combination with Geberit installation systems are cUPC and IPC listed.

Waste Fitting Discharge Configurations for Floor Mount Back Outlet Toilets
Note: Mounting collar/clamp by installer

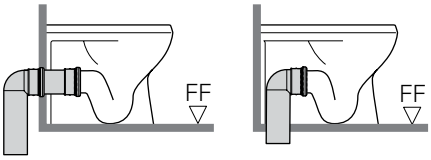

A. Floor-Mount Rear Discharge into Wall

B. Floor-Mount Rear Discharge into Floor

The information contained in this document is subject to change without notice.



The information contained in this document is subject to change without notice.



The information contained in this document is subject to change without notice.

GEBERIT
BATH WASTE AND TRAP SYSTEMS

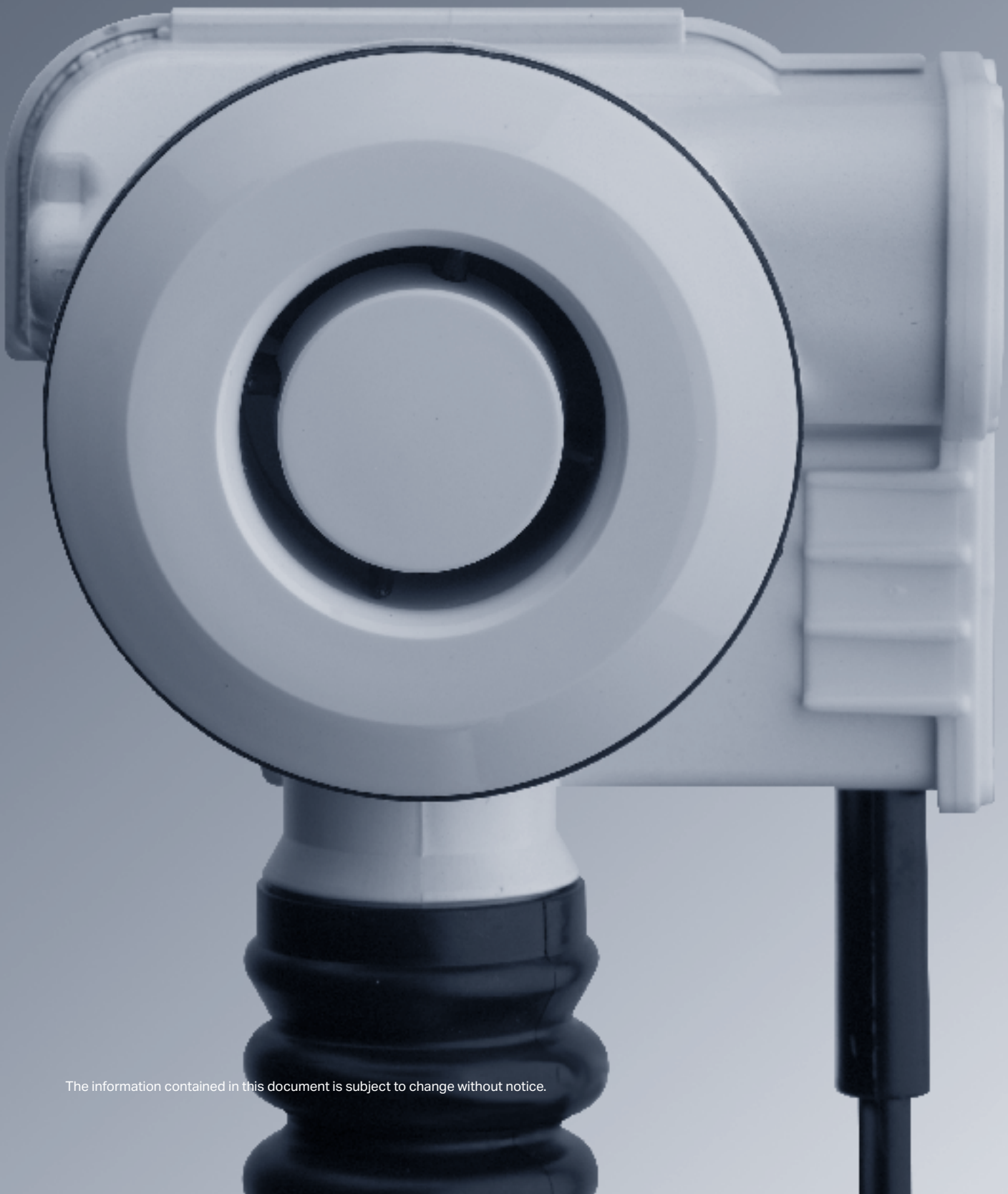

The information contained in this document is subject to change without notice.

GEBERIT BATH WASTE AND TRAP SYSTEMS

Trim Finishes and Rough-In Unit Materials

IT'S GEBERIT
IT'S CABLE-OPERATED

Unlike other styles of bath drains, the Geberit Bath Waste and Trap critical working parts are outside the waterway to prevent clogging. The high quality cable is crafted from Teflon® coated stainless steel and has a plastic sleeve to deliver years of trouble-free service.

STYLES TO MEET YOUR NEEDS



PushControl BWO
The Geberit PushControl BWO offers a thin, elegant look.



Traditional TurnControl BWO
The Geberit "original" was first-to-market over 25 years ago.



Cascading Tub Filler BWO
An integrated system that combines the functionality of filling and draining into one component.

The information contained in this document is subject to change without notice.

SELECTING A TRIM FINISH

The distinctive contoured handles are offered in a wide variety of finishes to match almost any décor. ForeverShine™ finishes have been developed to ensure that the quality and look of the product on which it is applied will last a lifetime. Clean up is simple and requires no abrasive cleansers or chemicals so maintaining the original factory finish is easy.

We are so confident of this finish process that we provide a limited lifetime warranty on ForeverShine™ products installed in residential applications.

Finish	Metal	Plastic
Alpine White (11)		■
Polished Chrome (21)	■	■
Bone (AA)		■
White (DY)		■
Biscuit (FF)		■
Hard Coat Oil Rubbed Bronze (HM)	■	
ForeverShine™ PVD Polished Nickel (IB)	■	
ForeverShine™ PVD Brushed Nickel (ID)	■	

MATERIAL SELECTION

Tubular Plastic
Plastic (polypropylene) is used chiefly for molded parts, electrical insulation, packaging.



Tubular Brass
Brass is a yellowish alloy of copper and zinc used for enhancing items such as the Geberit BWO.

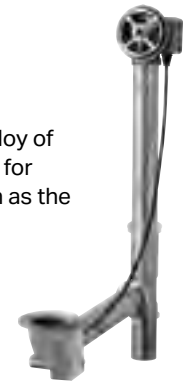

ABS
ABS (Acrylonitrile, Butadiene, Styrene) is a plastic that's hard and durable through a broad range of temperatures.



PVC
PVC, polyvinyl chloride, a widely used thermoplastic polymer, is tough, dent-resistant and maintains properties over long periods of time.



SELECTING A REMOTE

The Geberit Remote BWO Cable Drain features the same quality and performance as our full line of bath waste and overflow products, but with remote access possibilities. Its unique two-headed design gives you the flexibility of handle placement for ADA applications.



JOINTS

Slip joints are used when the drain will be accessible for maintenance. Glued joints are used for non-accessible drains. Geberit supplies tubing for slip connections with BWOs, but does NOT supply ABS/PVC piping for glued connections.

The information contained in this document is subject to change without notice.

GEBERIT BATH WASTE AND TRAP SYSTEMS

Selecting the Right Size Bath Waste and Overflow

FOR CONVENIENCE, USE THIS PAGE WHEN SIZING YOUR CABLE LENGTH.

Sizing a Geberit cable drain is simple. Start with acquiring the **Tub Depth** (see **FIGURE 1**), which serves as a rough guide for your final selection. While the actual definition of "tub depth" varies by manufacturer and model, the measurement is used to get a rough idea of the cable length you will need. Use the **Standard Rough-In Unit Cable Lengths** chart (below, right) to determine cable length based on your tub depth.

To assure your rough calculations are correct and your BWO will function properly, however, please follow these steps (refer to **FIGURE 1)**.

1. Determine the **Overflow Depth (A)** which is the distance from the overflow center to drain mounting surface.

2. Determine the **Drain Shoe Length (B)** which is the distance from the drain centerline to the overflow mounting surface.

3. Choose **material** and joint **connection type**. Because material selection and joint preparations selection are covered by local codes, be sure a professional contractor is involved. Geberit offers a complete spectrum of BWO materials to assure code compliance (see page 33). The materials offered are Tubular Polypropylene, Tubular Brass, ABS and PVC.

4. To determine the **final size** of your BWO for **Tubular Slip-Joint** Plastic/Brass cable drain, use **FIGURE 2** on page 35. To determine the final size of your BWO for **glued** ABS/PVC cable drain, use **FIGURE 3** on page 35.

5. Your information can now be used to find the part number on each type of Geberit BWO.

Once you have determined the size and part number, you can also give this information to your sales outlet so they can verify you have the right Geberit model for your needs.

FIGURE 1

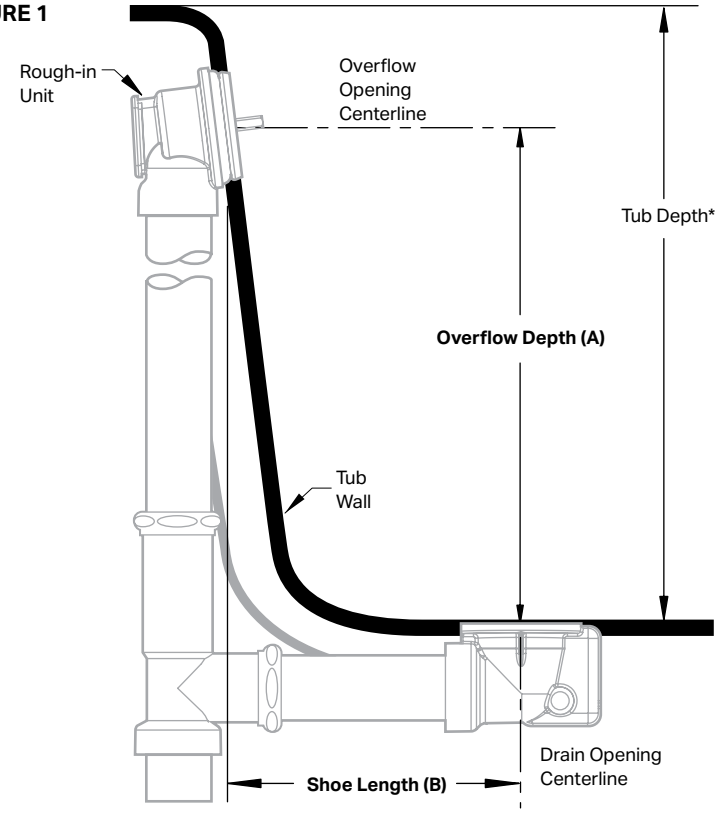

Standard Rough-In Unit Cable Lengths

Key	Typical Tub Depth*	Cable Length
	12"–16" (301–402)	17" (432)
	17"–24" (427–602)	27" (678)
	17"–24" (427–602)	33" (828)
	25"–29" (628–728)	43" (1,079)
	30" (753)	59" (1,481)

* Varies by manufacturer and model number. Non-standard sizes, please refer to **geberit.us**

The information contained in this document is subject to change without notice.

FIGURE 2

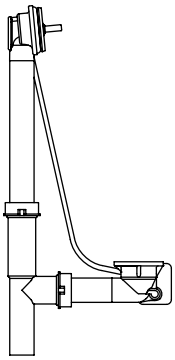

Standard Tubular Slip Joint Rough-In Unit Cable Length Configuration Guide

Use this chart to figure cable needed for Plastic/Brass standard Tubular installations.

Example:

Ⓐ Overflow Depth = 14″

Ⓑ Drain Shoe Length = 7.5″

Requires a Rough-In Unit with a cable length of 27″.

Custom installations can be achieved using standard Tubular Rough-In Units provided cable length is within acceptable range illustrated by shaded areas in guide.

Geberit recommends you review any custom installations with your sales outlet to assure you have the right model for your needs.

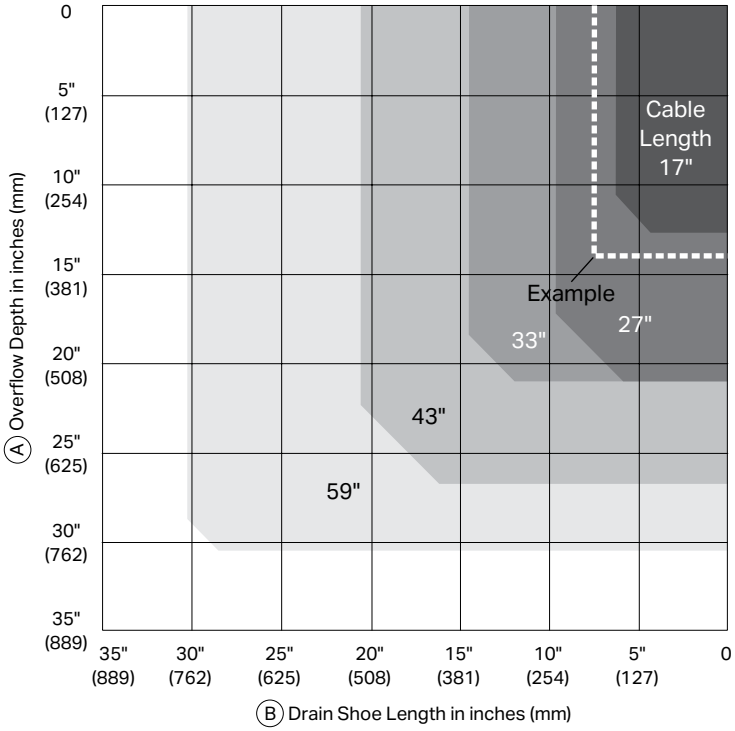

FIGURE 3

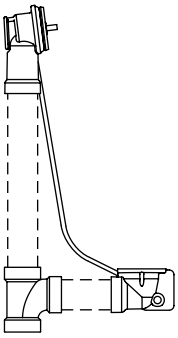

ABS/PVC Glued Rough-In Unit Cable Length Configuration Guide*

Use this chart to figure cable length needed for ABS/PVC glued custom installations.

Shaded areas indicate acceptable range of measurements for each cable length.

Example:

Ⓐ Overflow Depth = 22.5″

Ⓑ Drain Shoe Length = 12.5″

Requires a Rough-In Unit with a cable length of 43″.

Geberit recommends you review any custom installations with your sales outlet to assure you have the right model for your needs.

* ABS/PVC pipes not supplied

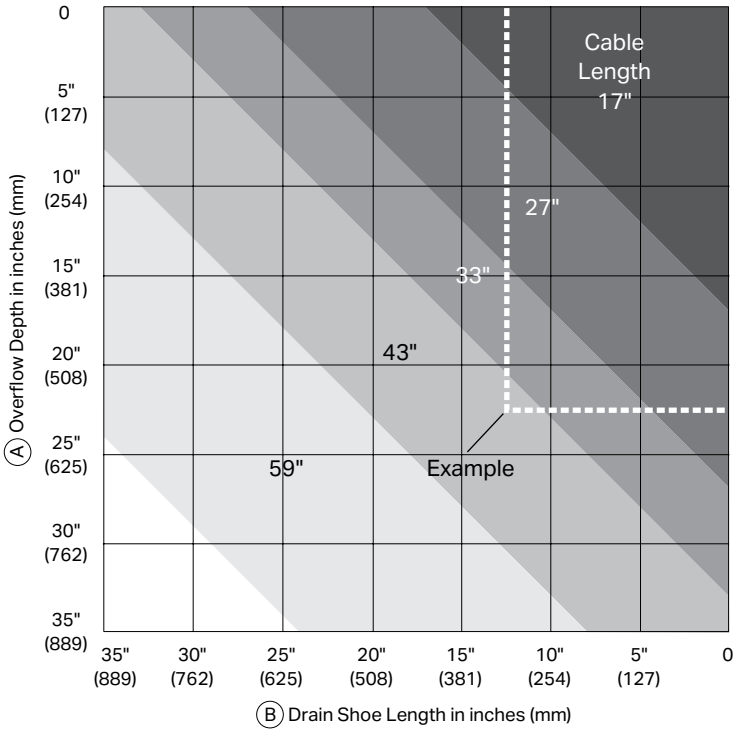

The information contained in this document is subject to change without notice.

GEBERIT BATH WASTE AND TRAP SYSTEMS

TurnControl BWO Systems

TurnControl Rough-In Unit

Does not include Trim Kit (see page 37) (Fits Tub Wall Thickness 1/16"–5/16") (Figs. A & B)

Description	Model No.	Tub Depth*	Cable Length	Overflow Depth	Drain Shoe Length	List Price $
Tubular Plastic Rough-In (Fig. A) 1½" Tubular plastic slip joint with PVC Tee connection	151.501.00.1	12"–16"	17"	Use FIGURE 2 on page 35		83.00
	151.504.00.1	17"–24"	27"			88.00
	151.508.00.1	17"–24"	33"			96.00
	151.512.00.1	25"–29"	43"			114.00
	151.515.00.1	30"	59"			129.00
Tubular Brass Rough-In (Fig. A) 1½" Tubular Brass slip joint with Brass Tee connection	151.460.00.1	17"–24"	27"			417.00
Tubular Brass Rough-In (Fig. A) 1½" Tubular Brass slip joint with Brass Chicago Code Tee	151.450.00.1	17"–24"	27"			417.00
ABS Rough-In (Fig. B) 1½" ABS Sch 40 for glued joint (Pipes not supplied)	151.502.00.1	12"–16"	17"	Use FIGURE 3 on page 35		83.00
	151.505.00.1	17"–24"	27"			88.00
	151.510.00.1	17"–24"	33"			96.00
	151.513.00.1	25"–29"	43"			114.00
	151.516.00.1	30"	59"			129.00
PVC Rough-In (Fig. B) 1½" PVC Sch 40 for glued joint. (Pipes not supplied)	151.503.00.1	12"-16"	17"			83.00
	151.506.00.1	17"–24"	27"			89.00
	151.511.00.1	17"–24"	33"			96.00
	151.514.00.1	25"–29"	43"			114.00
	151.517.00.1	30"	59"			129.00

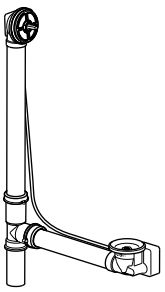

Fig. A
Tubular Rough-In Unit

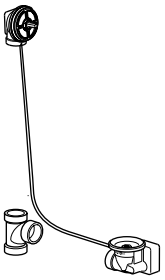

Fig. B
ABS/PVC Rough-In Unit

TurnControl Remote Control Rough-In Unit

Does not include Trim Kit (see page 37) (Figs. C & D)

Description	Model No.	Tub Depth*	Cable Length	Overflow Depth	Drain Shoe Depth	List Price $
Tubular Plastic Rough-In (Fig. C)	151.518.00.1	17"–24"	59"	—	—	201.00
ABS Rough-In (Fig. D)	151.519.00.1	17"–24"	59"	—	—	201.00
PVC Rough-In (Fig. D)	151.520.00.1	17"–24"	59"	—	—	201.00

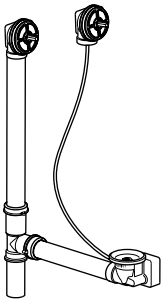

Fig. C
Tubular Remote Control Rough-In Unit

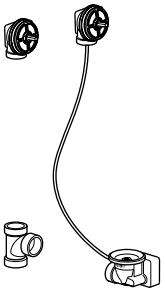

Fig. D
ABS/PVC Remote Control Rough-In Unit

TurnControl Rough-In Unit (Non-Standard)

Does not include Trim Kit (see page 37) (Fits Tub Wall Thickness 1/16"–5/16") (Fig. A)

Description	Model No.	Tub Depth*	Cable Length	Overflow Depth	Drain Shoe Depth	List Price $
Tubular Plastic Rough-In (Fig. A)	150.183.00.1	17"–24"	33"	30.50"	20.50"	128.00
(Non-Standard)	150.184.00.1	25"–29"	43"	30.50"	30.00"	143.00

Fully detailed information can be found at **geberit.us**

TurnControl Complete Unit

Includes Trim Kit and Tubular Plastic Rough-In Unit (Fits Tub Wall Thickness 1/16"–5/16") (Figs. E)

Material	Finish	Tub Depth*	Cable Length	Overflow Depth	Drain Shoe Length	Traditional Model No. (Fig. E)	List Price $
Metal	ForeverShine™ PVD Brushed Nickel	17"–24"	27"	Use FIGURE 2 on page 35		150.176.ID.1	286.00
	Polished Chrome	17"–22"	27"			150.176.21.1	224.00
	Hard Coat Oil Rubbed Bronze	17"–22"	27"			150.176.HM.1	292.00
	ForeverShine™ PVD Polished Nickel	17"–22"	27"			150.176.IB.1	286.00
Plastic	Polished Chrome	17"–24"	27"			150.156.21.1	167.00
	White	17"–24"	27"			150.156.DY.1	174.00
	Biscuit	17"–24"	27"			150.156.FF.1	174.00

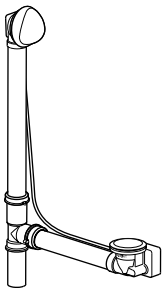

Fig. E
Traditional TurnControl Tubular Rough-In Complete Unit

* Tub Depth is only a rough calculation. To ensure proper cable length, refer to information on pages 34 and 35.

The information contained in this document is subject to change without notice.

TurnControl Trim Kit – Includes Handle and Plunger

		Model No.	
			
Material	**Finish**	**Traditional**	**List Price $**
Metal	Polished Chrome	151.551.21.1	116.00
	Hard Coat Oil Rubbed Bronze	151.551.HM.1	183.00
	ForeverShine™ PVD Polished Nickel	151.551.IB.1	178.00
	ForeverShine™ PVD Brushed Nickel	151.551.ID.1	178.00
Plastic	Alpine White	151.550.11.1	71.00
	Polished Chrome	151.550.21.1	71.00
	Bone	151.550.AA.1	77.00
	White	151.550.DY.1	77.00
	Biscuit	151.550.FF.1	77.00

Traditional
Plastic Handle

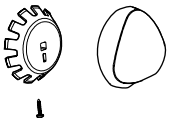

Traditional
Metal Handle



Plunger

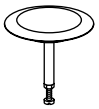

TurnControl, Remote Control Trim Kit
Note: if ordering a TurnControl Remote Control Rough-in Unit (page 36), you must order two TurnControl Trim Kits in the desired finish to complete the installation.

TurnControl Accessories

	Description	**Model No.**	**List Price $**
	ADA Handle Extension, Polished Chrome. For Metal Handles Only	241.789.21.1	35.00
	Test Plug Kit	240.691.00.1	36.00
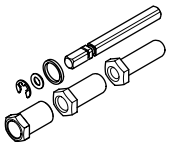	Extended Tub Wall Thickness Kit 3/8"–1/2", Tubular Plastic/Brass Rough-In	241.769.00.1	53.00
	Extended Tub Wall Thickness Kit 3/8"–1/2", ABS/PVC Rough-In	241.771.00.1	53.00
	Extended Tub Wall Thickness Kit 3/8"–1/2", Tub Filler	241.772.00.1	53.00
	Extended Tub Wall Thickness Kit 9/16"–3/4", Tubular/Brass Rough-In	241.773.00.1	53.00
	Extended Tub Wall Thickness Kit 9/16"–3/4", ABS/PVC Rough-In	241.774.00.1	53.00
	Extended Tub Wall Thickness Kit 9/16"–3/4", Tub Filler	241.775.00.1	53.00

The information contained in this document is subject to change without notice.

GEBERIT BATH WASTE AND TRAP SYSTEMS

PushControl BWO Systems

PushControl Complete Unit

Includes Trim Kit, Tubular Plastic Rough-In Unit and Installation Tools (Fits Tub Wall Thickness 1/16"–1/2")

Material	Finish	Model No.	Tub Depth*	Cable Length	Overflow Depth	Drain Shoe Length	List Price $
Metal	Polished Chrome	151.603.21.1	17"–24"	27"	Use FIGURE 2 on page 35		280.00
		151.605.21.1	17"–24"	33"			301.00
	ForeverShine™ PVD Brushed Nickel	151.603.ID.1	17"–24"	27"			350.00
		151.605.ID.1	17"–24"	33"			369.00
Plastic	Polished Chrome	151.602.21.1	17"–24"	27"			213.00
		151.604.21.1	17"–24"	33"			230.00

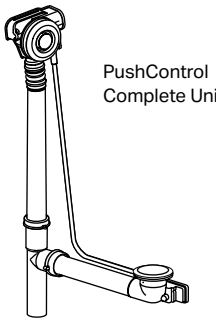

PushControl Complete Unit

Note: ForeverShine™ finishes ensure the quality and look of your Geberit BWO will last a lifetime.
Geberit offers a limited lifetime warranty on ForeverShine™ products installed in residential applications.

PushControl Accessories

Description	Model No.	List Price $
PushControl Toolkit (Included with purchase of each PushControl Complete Unit)	241.729.00.1	40.00

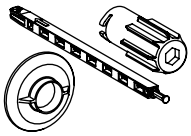

PushControl Toolkit

TurnControl BWO Systems with Cascading Tub Filler

Cascading Tub Filler, Complete Unit

Includes Trim Kit, Tubular Brass Rough-In Unit and Installation Tools (Fits Tub Wall Thickness 1/16"–1/2")

Material	Finish	Model No.	Tub Depth*	Cable Length	Overflow Depth	Drain Shoe Length	Tub Wall Thickness	List Price $
Metal	Polished Chrome	151.466.21.1	17"–24"	27"	Use FIGURE 2 on page 35		1/16"–5/16"	1,073.00
		151.467.21.1	17"–24"	27"			3/8"–1/2"	1,073.00
		151.468.21.1	17"–24"	27"			9/16"–3/4"	1,073.00

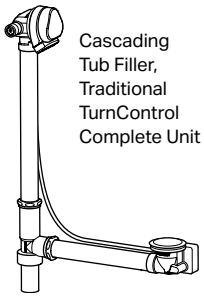

Cascading Tub Filler, Traditional TurnControl Complete Unit

Cascading Tub Filler, TurnControl ADA Handle Extension

Description	Model No.	List Price $
ADA Handle Extension, Polished Chrome	241.789.21.1	35.00



ADA Handle Extension

Lavatory Traps

Includes rough-in piping, trap, seals and mounting hardware configured especially for the tight spaces of vanity mounted sinks

Material	Finish	Model No.	Description	List Price $
Plastic	Alpine White	151.116.11.1	Outlet tube size 1-1/4" (32 mm) and sink connection thread G1-1/4"	57.00
		151.117.11.1	Outlet tube size 1-9/16" (40 mm) and sink connection thread G1-1/4"	57.00
		151.118.11.1	Outlet tube size 1-1/4" (32 mm) and sink connection thread G1-1/4" plus various adapters	57.00

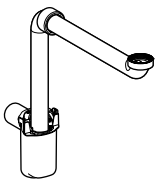

* Tub Depth is only a rough calculation. To ensure proper cable length, refer to information on pages 34 and 35.

The information contained in this document is subject to change without notice.

GEBERIT
REPLACEMENT PARTS



The information contained in this document is subject to change without notice.

GEBERIT INSTALLATION SYSTEMS

Replacement Parts

Geberit Duofix Carrier 111.335.00.5 and 111.902.00.5, Sigma 2x6 Installation

Item	Model No.	Description	List Price $
1	242.314.00.1	Materials for Concealed Carrier and Tank installation	66.00
2	242.315.00.1	Splash guard protection cover for Sigma Concealed Tank	10.00
3	243.345.00.1 or 243.168.00.1	Mud guard protection housing for Sigma Concealed Tanks 2x6 and 2x4, plastic	18.00
4	362.771.00.1	Seal for concealed flush pipe, EPDM	4.00
5	362.796.92.1	Protection plug, plastic	7.00
6	240.189.00.1	Threaded rod for wall-mounted toilet or bidet installation	6.00
7	152.404.46.1	Connector set with mounting hardware (bowl installation kit), HDPE; Matte Chrome cover caps	50.00
7	152.404.11.1	Connector set with mounting hardware (bowl installation kit), HDPE; Matte White cover caps (accessory only)	50.00
7.1	217.713.46.1	Cover caps with leveling washer, plastic, Matte Chrome	8.00
7.2	119.668.00.1	Seal for supply inlet tube, EPDM	4.00
7.3	152.424.00.1	Seal for toilet outlet connector, EPDM	6.00
8	366.061.16.1	HDPE waste fitting outlet bend, 1 x 90° bend with socket for Ø3.50" (Ø90 mm) push fit piping and Ø3.50" (Ø90 mm) outlet	25.00
8.1	387.282.00.1	Seal for outlet bends, EPDM	6.00
9	366.820.92.1	Protection plug, plastic	5.00
10	—	Flexible coupling FERNCO 3005-33	—
11	242.012.00.1	Outlet pipe bracket (complete)	7.00

Item	Model No.	Description	List Price $
12	242.886.00.1	Conduit pipe for shower toilet water supply with Sigma Concealed Tank 2x6, Omega Concealed Tank or Kappa Concealed Tank (from 2013 on)	14.00
13	111.892.00.1	Frame mounting screws for steel stud construction, galvanized, self-tapping	7.00
14	240.853.00.1	Supply angle stop (black handle)	15.00
14.1	240.851.00.1	Drop ear elbow, copper	15.00
15	240.921.00.1	Connection hose for Sigma Concealed Tank, 3/8"	17.00
15.1	240.922.00.1	Set of seals for RFB hose	5.00
16	240.923.00.1	Fixation clip for filling valve	7.00
17	241.469.00.1	Filling valve Type 380 for Sigma, Omega and Kappa Concealed Tanks	32.00
17.1	240.771.00.1	Seal kit for filling valve Type 380	12.00
18.1	241.167.00.1	Yoke set for flush valves	12.00
18.2	816.418.00.1	Geberit flat gasket for flush valve	4.00
19.1	241.868.00.1	U-cup seal for valve basket	4.00
20	241.829.00.1	Flush actuator gear box	10.00
21	240.269.00.1	Angle stop valve to concealed tank (blue handle)	23.00
21.1	240.298.00.1	Spindle to angle stop valve	18.00
21.2	241.857.00.1	Counter nut, plastic	6.00
21.3	240.347.00.1	Handle for angle stop valve (blue)	6.00
22	244.125.00.1	Foot plate set	17.00
23	242.698.00.1	Concealed Flush Bend for Sigma tank	38.00
24A	245.380.00.1	1.6/0.8 GPF dual flush valve for Sigma Tanks	23.00
24B	245.400.00.1	1.28/0.8 GPF dual flush valve for Sigma Tanks	23.00
24.1	244.844.00.1	Handle set	14.00
24.2	244.244.00.1	Flat gasket seal	4.00
24.3	241.868.00.1	U-cup seal for valve basket	4.00

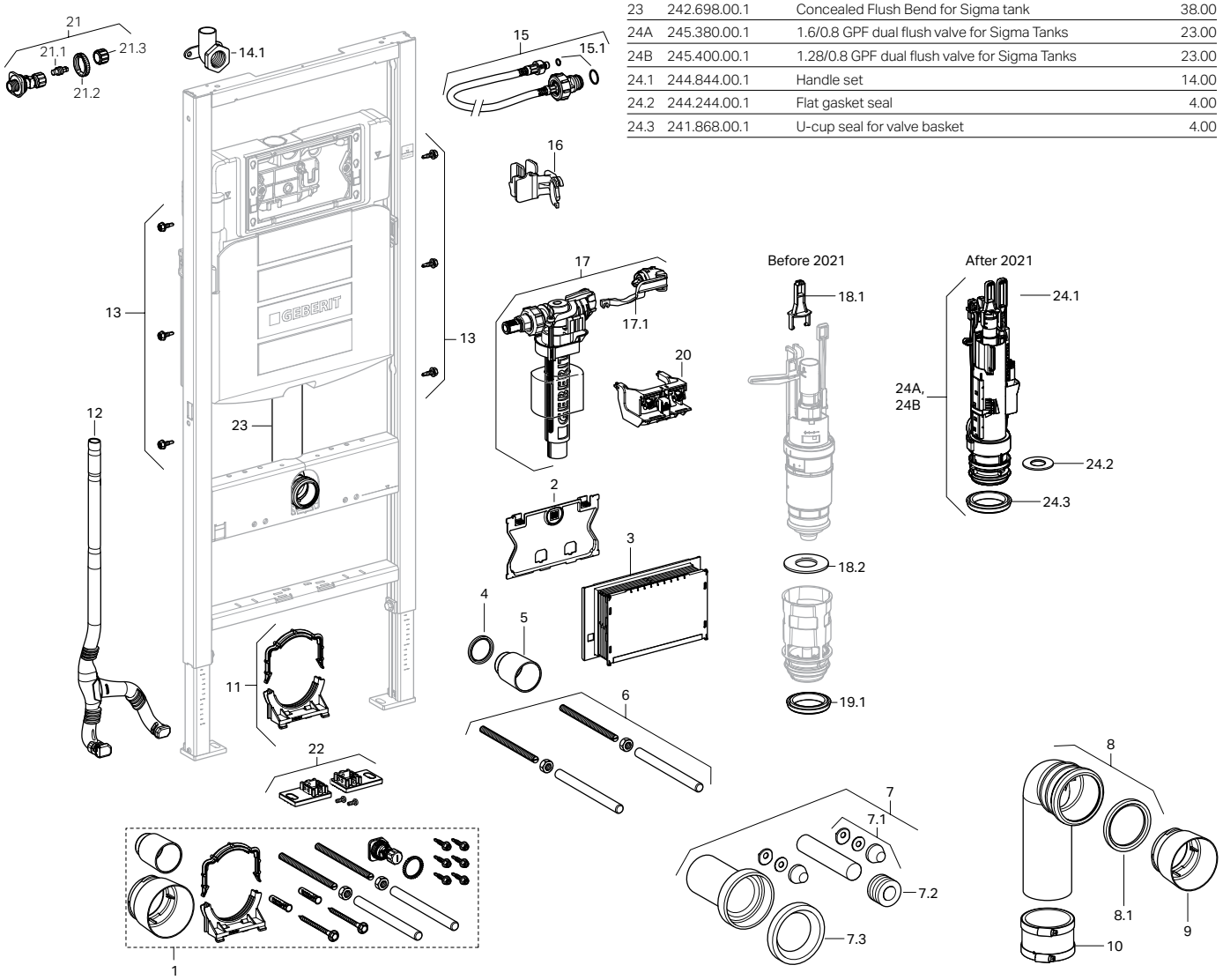

The information contained in this document is subject to change without notice.

Geberit Duofix Carrier 111.798.00.1 and 111.597.00.1, Sigma 2x4 Installation

Item	Model No.	Description	List Price $
1	242.314.00.1	Materials for Concealed Carrier and Tank installation	66.00
2	242.418.00.1	Splash guard protection cover for Sigma Concealed Tank 2x4	10.00
3	243.345.00.1 or 243.168.00.1	Mud guard protection housing for Sigma Concealed Tank 2x4, plastic	18.00
4	362.771.00.1	Seal for concealed flush pipe, EPDM	4.00
5	362.796.92.1	Protection plug, plastic	7.00
6	240.189.00.1	Threaded rod for wall-mounted toilet or bidet installation	6.00
7	152.404.46.1	Connector set with mounting hardware (bowl installation kit), HDPE; Matte Chrome cover caps	50.00
7	152.404.11.1	Connector set with mounting hardware (bowl installation kit), HDPE; Matte White cover caps (accessory only)	50.00
7.1	217.713.46.1	Cover caps with leveling washer, plastic, Matte Chrome	8.00
7.2	119.668.00.1	Seal for supply inlet tube, EPDM	4.00
7.3	152.424.00.1	Seal for toilet outlet connector, EPDM	6.00
8	241.899.00.1	HDPE waste fitting outlet bend, 1 x 90° bend with socket for Ø3.50" (Ø90 mm) push fit piping and Ø3.50" (Ø90 mm) outlet	70.00
8.1	387.282.00.1	Seal for outlet bends, EPDM	6.00
9	366.820.92.1	Protection plug, plastic	5.00
10	—	Flexible coupling FERNCO 3005-33	—
11	242.012.00.1	Outlet pipe bracket (complete)	7.00
12	242.886.00.1	Conduit pipe for shower toilet water supply with Sigma Concealed Tank 2x4 (from mid-2013 on)	14.00
13	216.179.00.1	Installation hardware	5.00
14	240.851.00.1	Drop ear elbow, copper	15.00

Item	Model No.	Description	List Price $
15	243.175.00.1	Connection hose for Sigma Concealed Tank 2x4, 3/8"	27.00
15	243.357.00.1	Connection hose for Sigma Concealed Tank 2x4, 3/8" - for salt water applications	35.00
15.1	240.922.00.1	Set of seals for RFB hose	5.00
16	243.279.00.1	Fixation clip for filling valve	6.00
17	241.469.00.1	Filling valve Type 380 for Sigma, Omega and Kappa Concealed Tanks	32.00
17.1	240.771.00.1	Seal kit for filling valve Type 380	12.00
17.2	241.670.00.1	Nipple to filling valve Type 380 for Sigma Concealed Tank 2x4	20.00
18A	243.727.00.1	1.28/0.8 GPF dual-flush valve for Sigma Concealed Tank 2x4 (111.597)	18.00
18B	241.290.00.1	Dual-flush valve for 1.6/0.8 GPF Sigma Concealed Tank 2x4 (111.728/111.798)	36.00
18.1	241.167.00.1	Yoke set for flush valves	12.00
18.2	241.291.00.1	Flat gasket for flush valve for Sigma Concealed Tank 2x4	4.00
18.3	241.292.00.1	Fixing rail to Sigma Concealed Tank 2x4	6.00
19	242.269.00.1	Valve seat basket and noise bushing for flush valve	18.00
19.1	241.293.00.1	U-cup seal for valve basket	5.00
20	243.344.00.1	Flush actuator gear box	18.00
21	240.847.00.1	Stop valve to concealed tank (blue handle - for salt water applications	34.00
21	242.414.00.1	Stop valve to concealed tank (blue handle)	19.00
21.1	240.298.00.1	Spindle to angle stop valve	18.00
21.2	240.347.00.1	Handle for angle stop valve (blue)	6.00
22	111.892.00.1	Frame mounting screws for steel stud construction, galvanized, self-tapping	7.00
23	244.125.00.1	Foot plate set	17.00

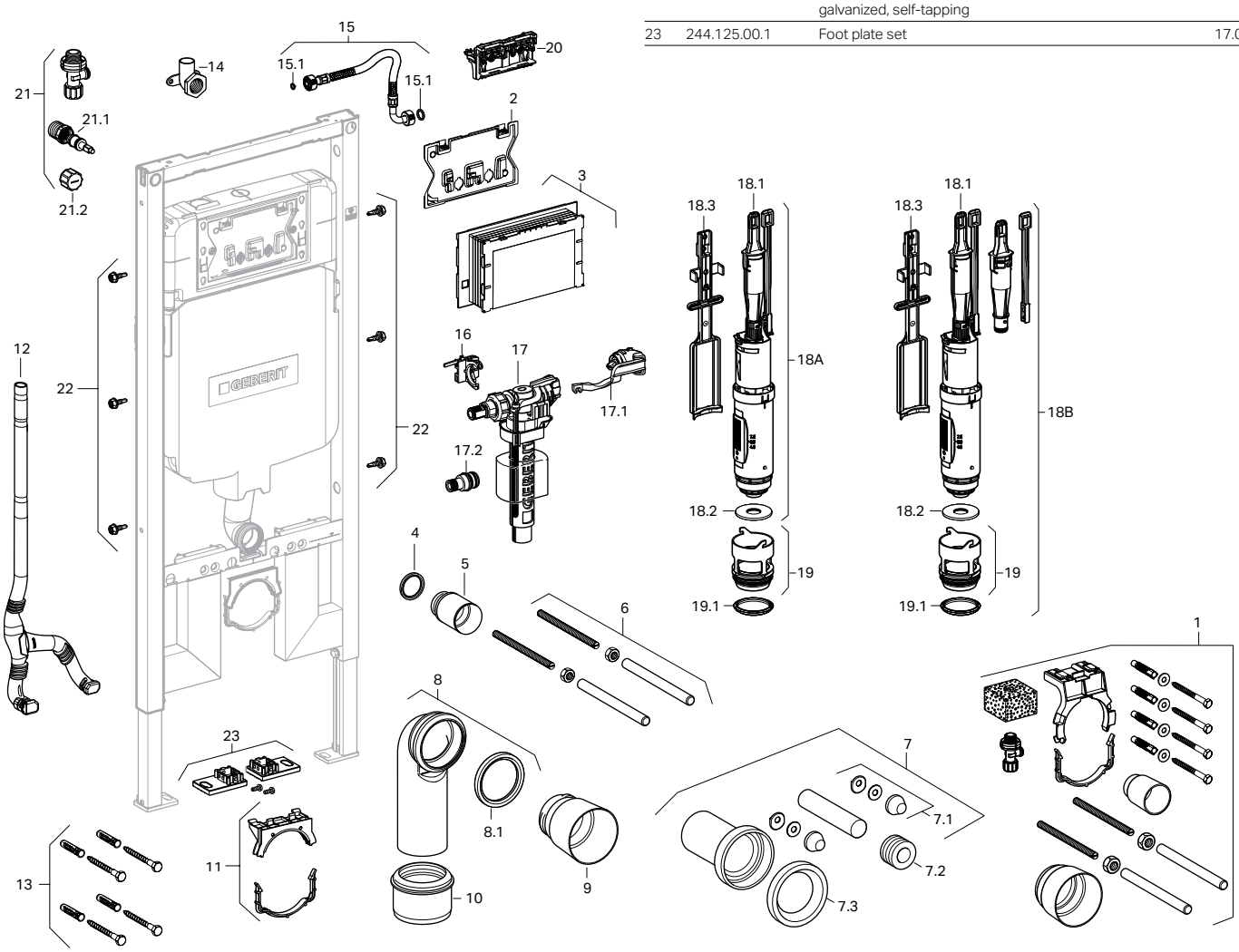

The information contained in this document is subject to change without notice.

Replacement Parts

Inactive Geberit Duofix Carrier 111.728.00.1, Sigma 2x4 Installation

Item	Model No.	Description	List Price $
1	242.314.00.1	Materials for Concealed Carrier and Tank installation	66.00
2	242.418.00.1	Splash guard protection cover for Sigma Concealed Tank 2x4	10.00
3	243.345.00.1 or 243.168.00.1	Mud guard protection housing for Sigma Concealed Tank 2x4, plastic	18.00
4	362.771.00.1	Seal for concealed flush pipe, EPDM	4.00
5	362.796.92.1	Protection plug, plastic	7.00
6	240.189.00.1	Threaded rod for wall-mounted toilet or bidet installation	6.00
7	152.404.11.1	Connector set with mounting hardware (bowl installation kit), HDPE; Matte Chrome cover caps	50.00
7.1	217.713.46.1	Cover caps with leveling washer, plastic, Matte Chrome	8.00
7.2	119.668.00.1	Seal for supply inlet tube, EPDM	4.00
7.3	152.424.00.1	Seal for toilet outlet connector, EPDM	6.00
8	241.899.00.1	HDPE waste fitting outlet bend, 1 x 90° bend with socket for Ø3.50" (Ø90 mm) push fit piping and Ø3.50" (Ø90 mm) outlet	70.00
8.1	387.282.00.1	Seal for outlet bends, EPDM	6.00
9	366.820.92.1	Protection plug, plastic	5.00
10	—	Flexible coupling FERNCO 3005-33	—
11	242.012.00.1	Outlet pipe bracket (complete)	7.00
12	216.179.00.1	Installation hardware	5.00
13	240.851.00.1	Drop ear elbow, copper	15.00
14	242.415.00.1	Connection hose for Sigma Concealed Tank 2x4, 3/8"	27.00
14.1	240.922.00.1	Set of seals for RFB hoses	5.00

Item	Model No.	Description	List Price $
15	241.286.00.1	Fixation clip for filling valve	6.00
16	241.469.00.1	Filling valve Type 380 for Sigma, Omega and Kappa Concealed Tanks	32.00
16.1	240.771.00.1	Seal kit for filling valve Type 380	12.00
16.2	241.670.00.1	Nipple to filling valve Type 380 for Sigma Concealed Tank 2x4	20.00
17	241.290.00.1	Dual-flush valve complete with valve seat basket for Sigma Concealed Tank 2x4 (111.728/111.798)	36.00
17.2	241.167.00.1	Yoke set for flush valves	12.00
17.3	241.291.00.1	Flat gasket for flush valve for Sigma Concealed Tank 2x4	4.00
17.4	241.292.00.1	Fixing rail to Sigma Concealed Tank 2x4	6.00
18	242.269.00.1	Valve seat basket and noise bushing for flush valve	18.00
18.1	241.293.00.1	U-cup seal for valve basket	5.00
19	242.417.00.1	Flush actuator gear box	15.00
20	240.847.00.1	Stop valve to concealed tank (blue handle - for salt water applications	34.00
20	242.414.00.1	Stop valve to concealed tank (blue handle)	19.00
20.1	240.298.00.1	Spindle to angle stop valve	18.00
20.2	240.347.00.1	Handle for angle stop valve (blue)	6.00
21	111.892.00.1	Frame mounting screws for steel stud construction, galvanized, self-tapping	7.00
22	249.801.00.1	Water supply hose for bidet seat add-on after finished installation (optional)	130.00
23	242.413.00.1	Water supply hose for bidet seat for 111.728.00.1 carrier with Sigma Concealed Tank 2x4 (UP720). For adding bidet seat to an installed carrier. For complete installation, must order with 249.801.00.1. (optional)	53.00

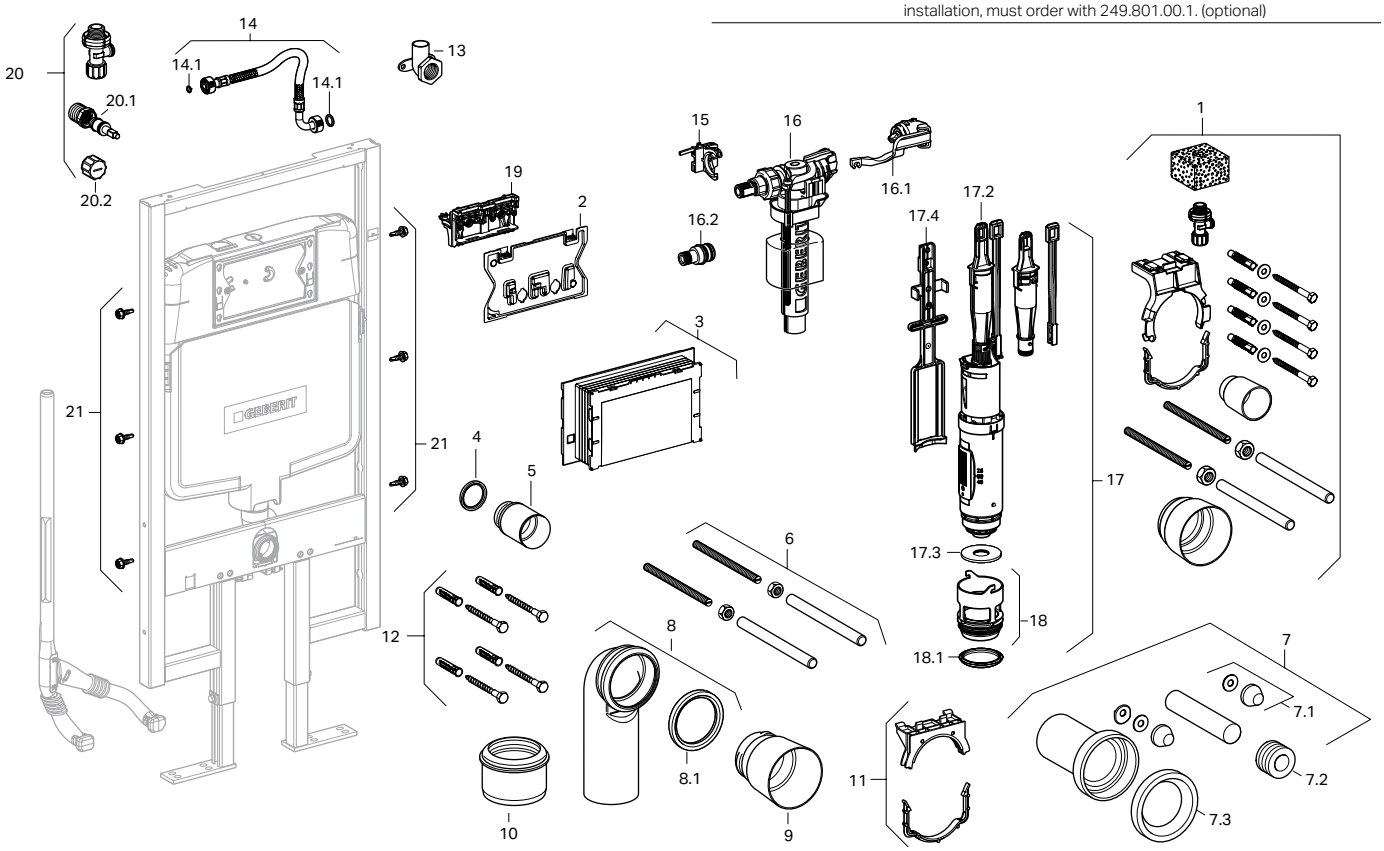

The information contained in this document is subject to change without notice.

Geberit Duofix Carrier 111.012.00.1 and 111.018.00.1, Omega 2x6 Installation

Item	Model No.	Description	List Price $
1	240.269.00.1	Angle stop valve to concealed tank (blue handle)	23.00
1.1	240.298.00.1	Spindle to angle stop valve	18.00
1.2	241.857.00.1	Counter nut, plastic	6.00
1.3	240.347.00.1	Handle for angle stop valve (blue)	6.00
2	240.629.00.1	Reinforced braided hose for Geberit Kappa and Omega Concealed Tank	23.00
2.1	240.922.00.1	Set of seals for RFB hose	5.00
3	243.088.00.1	Mounting bracket for filling valve	7.00
4	241.469.00.1	Fill valve Type 380	32.00
4.1	240.771.00.1	Seal kit for filling valve Type 380	12.00
5	243.090.00.1	Protection plate	65.00
6	243.091.00.1	Support block	20.00
7	243.092.00.1	Mud guard protection housing	30.00
8	243.093.00.1	Insertion plate	9.00
9.1	241.167.00.1	Yoke set for flush valves	12.00
9.2	816.418.00.1	Geberit flat gasket for flush valve	4.00
10.2	241.868.00.1	U-cup seal for valve basket after 2008	4.00
11	362.771.00.1	Seal for concealed flush pipe, EPDM	4.00
12	362.796.92.1	Protection plug, plastic	7.00
13	242.012.00.1	Outlet pipe bracket (complete)	7.00
14	152.404.46.1	Connector set with mounting hardware (bowl installation kit), HDPE; Matte Chrome cover caps	50.00
14	152.404.11.1	Connector set with mounting hardware (bowl installation kit), HDPE; Matte White cover caps (accessory only)	50.00

Item	Model No.	Description	List Price $
14.1	217.713.46.1	Cover caps with leveling washer, plastic, Matte Chrome	8.00
14.2	119.668.00.1	Seal for supply inlet tube, EPDM	4.00
14.3	152.424.00.1	Seal for toilet outlet connector, EPDM	6.00
15	242.314.00.1	Materials for Concealed Carrier and Tank installation	66.00
16	366.061.16.1	HDPE waste fitting outlet bend, 1 x 90° bend with socket for Ø3.50" (Ø90 mm) push fit piping and Ø3.50" (Ø90 mm) outlet	25.00
16.1	387.282.00.1	Seal for outlet bends, EPDM	6.00
17	366.820.92.1	Protection plug, plastic	5.00
18	240.189.00.1	Threaded rod for wall-mounted toilet or bidet installation	6.00
19	242.886.00.1	Conduit pipe for shower toilet water supply with Sigma Concealed Tank 2x6, Omega Concealed Tank or Kappa Concealed Tank (from 2013 on)	14.00
20	111.892.00.1	Frame mounting screws for steel stud construction, galvanized, self-tapping	7.00
21	—	Flexible coupling FERNCO 3005-33	—
22	244.125.00.1	Foot plate set	17.00
23A	245.377.00.1	1.6/0.8 GPF dual flush valve for Omega Tanks	42.00
23B	245.372.00.1	1.28/0.8 GPF dual flush valve for Omega Tanks	42.00
23.1	244.844.00.1	Handle set	14.00
23.2	244.244.00.1	Flat gasket seal	4.00
23.3	241.868.00.1	U-cup seal for valve basket	4.00

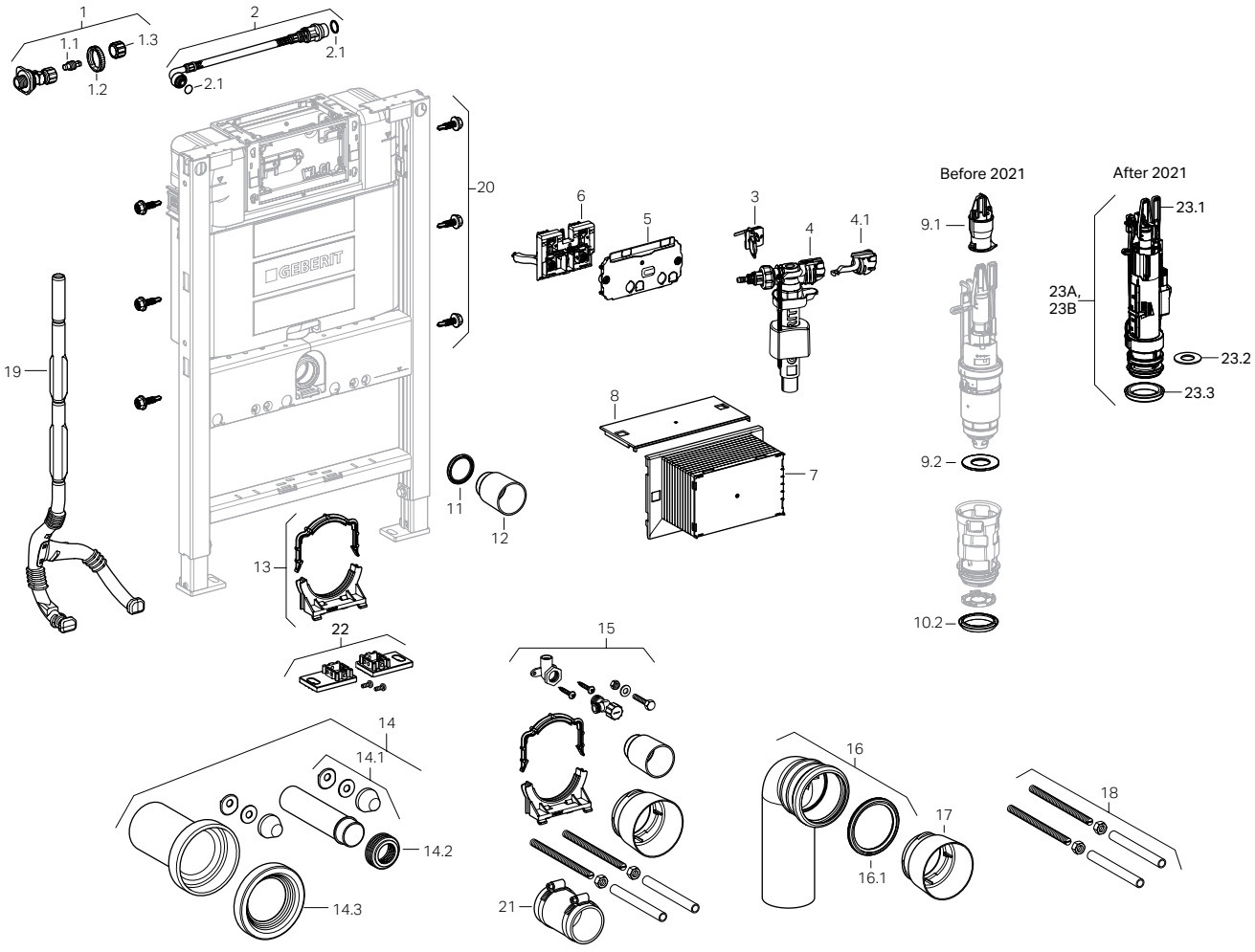

The information contained in this document is subject to change without notice.

GEBERIT INSTALLATION SYSTEMS

Replacement Parts

Inactive Geberit Duofix Carrier 111.255.00.1, 2x6 Installation

Item	Model No.	Description	List Price $
1	242.316.00.1	Splash guard protection cover for Kappa Concealed Tank	12.00
2	240.172.00.1	Mud guard protection housing for Kappa Concealed Tank, plastic, comes standard	27.00
3	240.533.00.1	Flush actuator gear box	17.00
4	240.853.00.1	Supply angle Stop (black handle)	15.00
4.1	240.851.00.1	Drop ear elbow, copper	15.00
4.2	—	Adapter 3/8" BSPP-F to 1/2" NPT-M, Brass	—
5	241.469.00.1	Filling valve Type 380 for Sigma and Kappa concealed tanks	32.00
5.1	240.771.00.1	Seal kit for filling valve Type 380	12.00
6	240.629.00.1	Connection hose for Kappa Concealed Tank	23.00
6.1	240.922.00.1	Set of seals for RFB hose	5.00
7	240.637.00.1	Dual-flush valve complete with valve seat basket for UP200	39.00
8	240.638.00.1	Dual-flush valve for Kappa Concealed Tank	29.00
8.1	816.418.00.1	Geberit flat gasket for flush valve	4.00
8.2	241.167.00.1	Yoke set for flush valves	12.00
9	241.859.00.1	Valve seat basket and noise bushing for flush valve	11.00
9.1	241.868.00.1	U-cup seal for valve basket	4.00
10	362.771.00.1	Seal for concealed flush pipe, EPDM	4.00
11	362.796.92.1	Protection plug, plastic	7.00
12	240.189.00.1	Threaded rod for wall-mounted toilet or bidet installation	6.00
13	242.012.00.1	Outlet pipe bracket (complete)	7.00
14	152.404.46.1	Connector set with mounting hardware (bowl installation kit), HDPE; Matte Chrome cover caps	50.00
14	152.404.11.1	Connector set with mounting hardware (bowl installation kit), HDPE; Matte White cover caps (accessory only)	50.00
14.1	217.713.46.1	Cover caps with leveling washer, plastic, Matte Chrome	8.00
14.2	119.668.00.1	Seal for supply inlet tube, EPDM	4.00
14.3	152.424.00.1	Seal for toilet outlet connector, EPDM	6.00
15	366.061.16.1	HDPE waste fitting outlet bend, 1 x 90° bend with socket for Ø3.50" (Ø90 mm) push fit piping and Ø3.50" (Ø90 mm) outlet	25.00
15.1	387.282.00.1	Seal for outlet bends, EPDM	6.00
16	366.820.92.1	Protection plug, plastic	5.00
17	—	Flexible coupling FERNCO 3005-33	—
18	111.892.00.1	Frame mounting screws for steel stud construction, galvanized, self-tapping	7.00
19	242.314.00.1	Installation materials for concealed carrier and tank	66.00
20	240.269.00.1	Angle stop valve to concealed tank (Blue handle)	23.00
20.1	240.298.00.1	Spindle to angle stop valve	18.00
20.2	240.347.00.1	Handle for angle stop valve (Blue)	6.00
20.3	241.857.00.1	Counter nut, plastic	6.00
21	242.886.00.1	Conduit pipe for shower toilet water supply with Sigma Concealed Tank 2x6, Omega Concealed Tank or Kappa Concealed Tank (from 2013 on)	14.00
22	244.125.00.1	Foot plate set	17.00

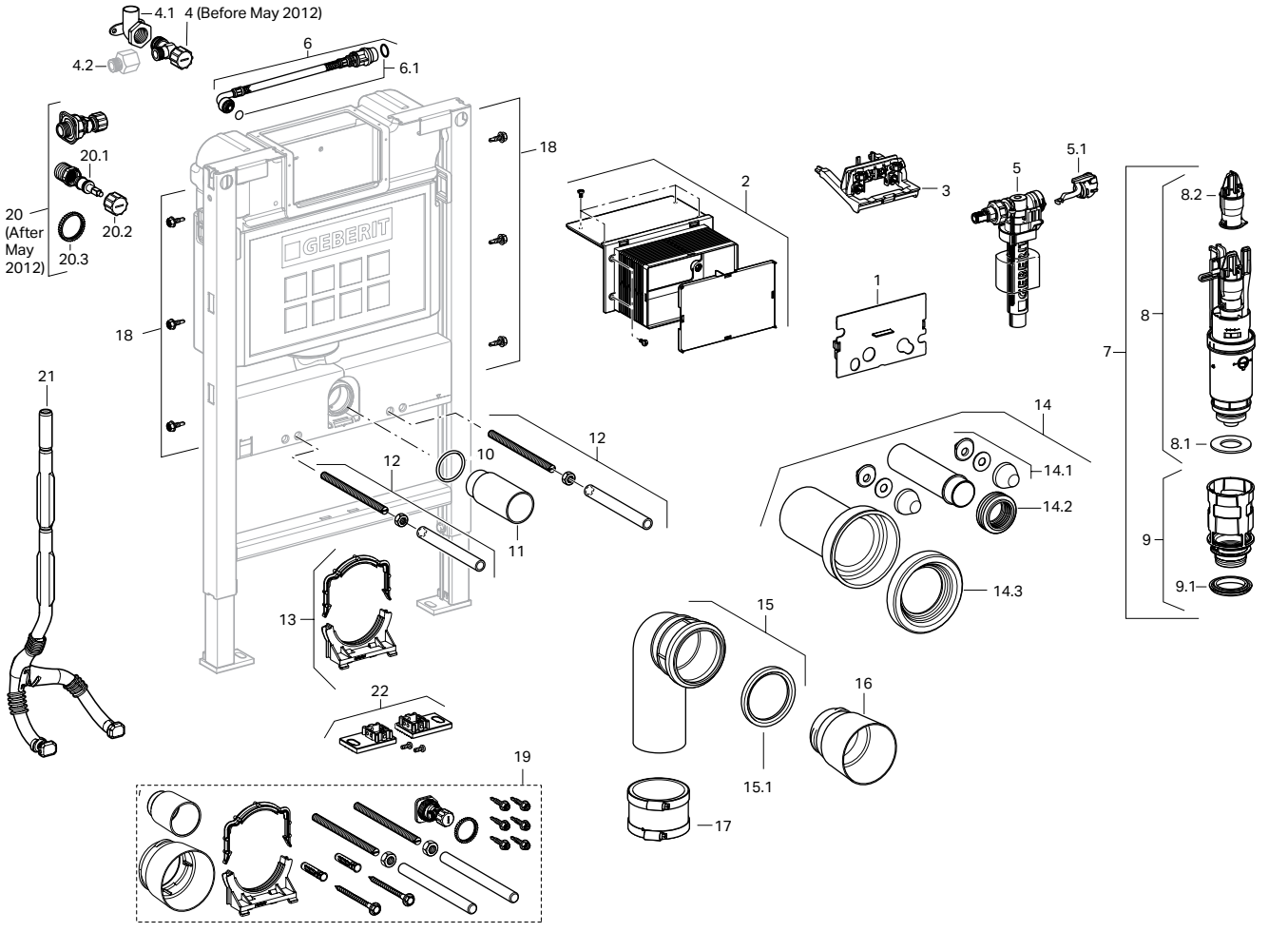

The information contained in this document is subject to change without notice.

Geberit Duofix Carrier 111.625.00.1

Item	Model No.	Description	List Price $
1	242.039.00.1	Crossbar for water supply	76.00
1.1	362.790.00.1	Round cord ring, EPDM	4.00
2	152.489.16.1	Supply inlet tube with seal, PE; with Ø1.34" (Ø35 mm) supply inlet	32.00
2.1	119.669.00.1	Sleeve, EPDM	5.00
3	242.045.00.1	Fixing, with plastic nuts, complete	17.00
3.1	242.046.00.1	Plastic union nuts for crossbar for fixing	12.00
4	240.027.46.1	Cover caps, plastic, Matte Chrome	8.00
5	242.047.00.1	Outlet cross member	30.00
6	152.950.11.1	Syphonic trap with horizontal outlet and seal, PE; with Ø1.97" (Ø50 mm) outlet	40.00
7	853.614.92.1	Protection plug	6.00
8	240.315.00.1	Waste fitting outlet bend, PE; 1 x 90° bend with Ø2.48"/Ø1.97" (Ø63/Ø50 mm)	27.00
8.1	152.693.00.1	Seal for connector, EPDM; for Ø1.97" (Ø50 mm) outlet	5.00
9	242.516.00.1	Outlet pipe Ø1.97" (Ø50 mm) Terrain article no. 225.2G	39.00
10	111.892.00.1	Frame mounting screws for steel stud construction, galvanized, self-tapping	7.00
11	241.930.00.1	Mud guard protection housing and extension set for urinal carrier	22.00
12	242.131.00.1	Elbow, 90° (not shown)	66.00
13	244.125.00.1	Foot plate set	17.00

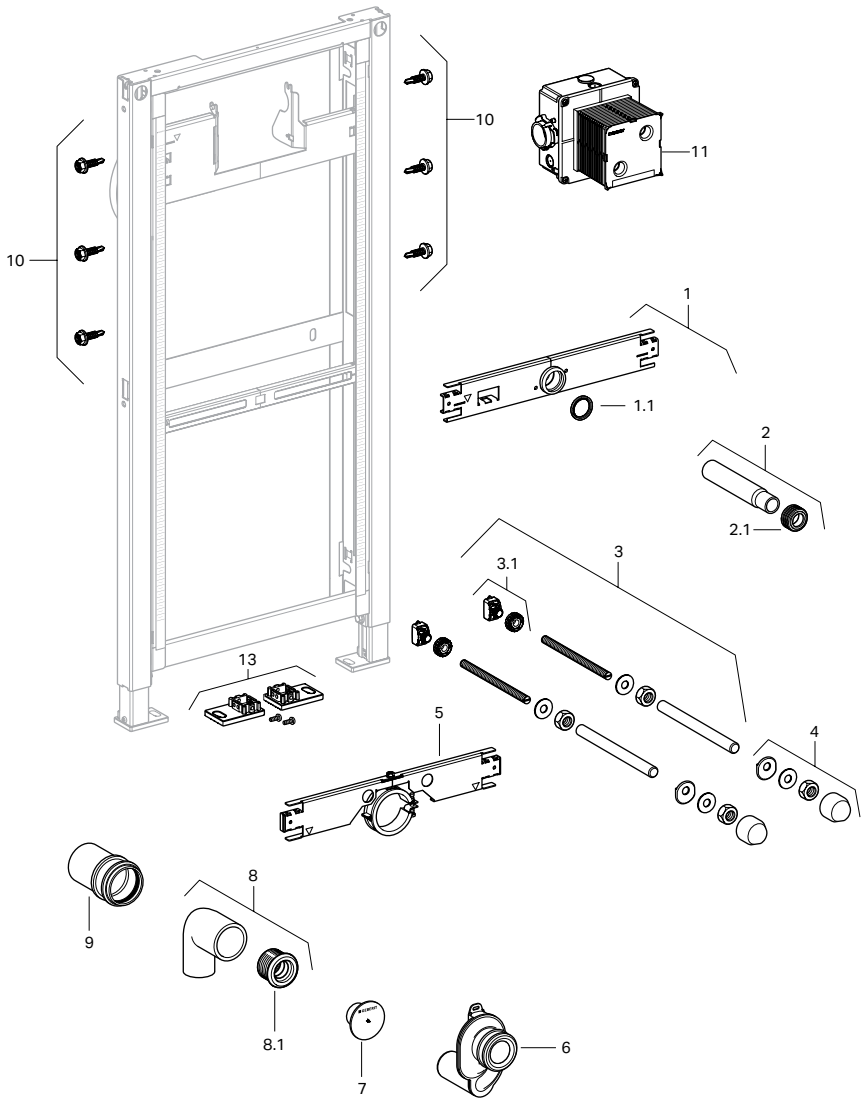

The information contained in this document is subject to change without notice.

Replacement Parts

Geberit Duofix Carriers 111.520.00.1 and 111.524.00.1

Item	Model No.	Description	List Price $
1	111.892.00.1	Frame mounting screws for steel stud construction, galvanized, self-tapping	7.00
2	241.066.00.1	Pipe mounting bracket	20.00
3	241.067.16.1	Outlet bend – 90 degrees	17.00
4	152.682.00.1	Outlet seal, EPDM, push on for Ø1.97" (Ø50 mm) tube	4.00
5	240.306.00.1	Protection plug, Ø1.26" (Ø32 mm)	4.00
6	240.189.00.1	Threaded rod for wall-mounted toilet or bidet installation	6.00
7	217.713.46.1	Cover caps with leveling washer, plastic, Matte Chrome	8.00
8	244.125.00.1	Foot plate set	17.00

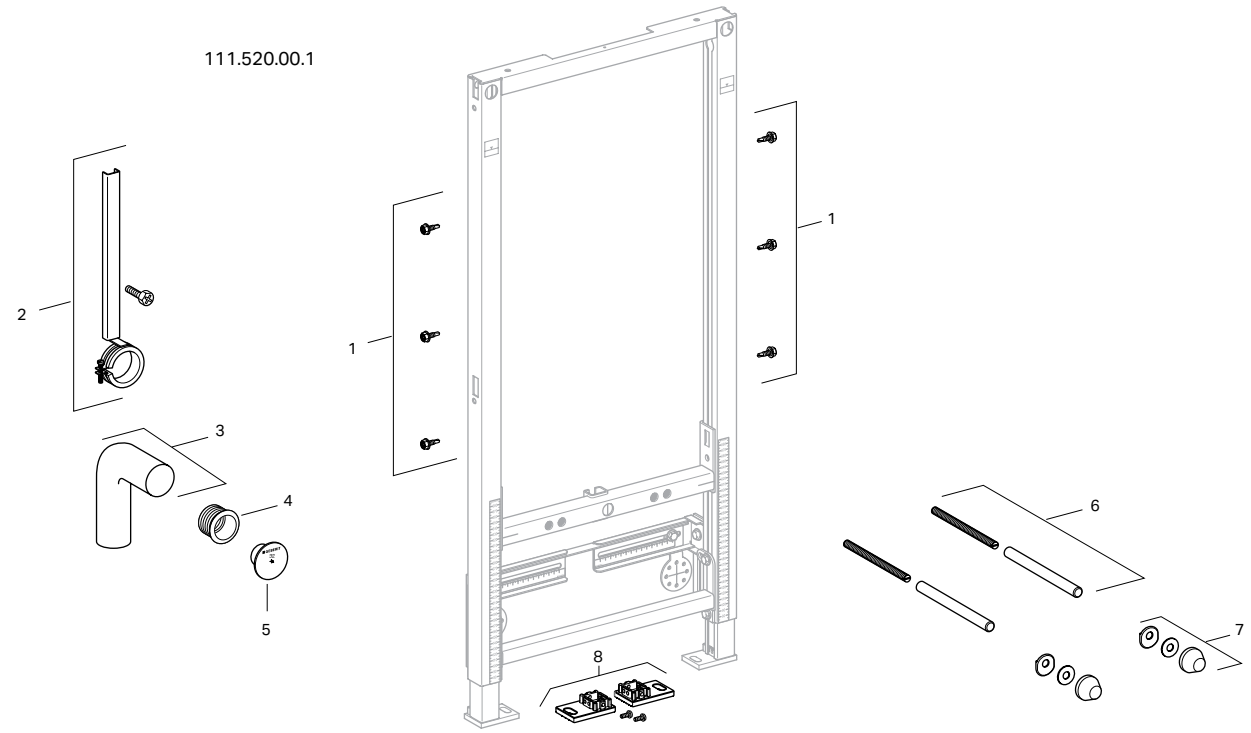

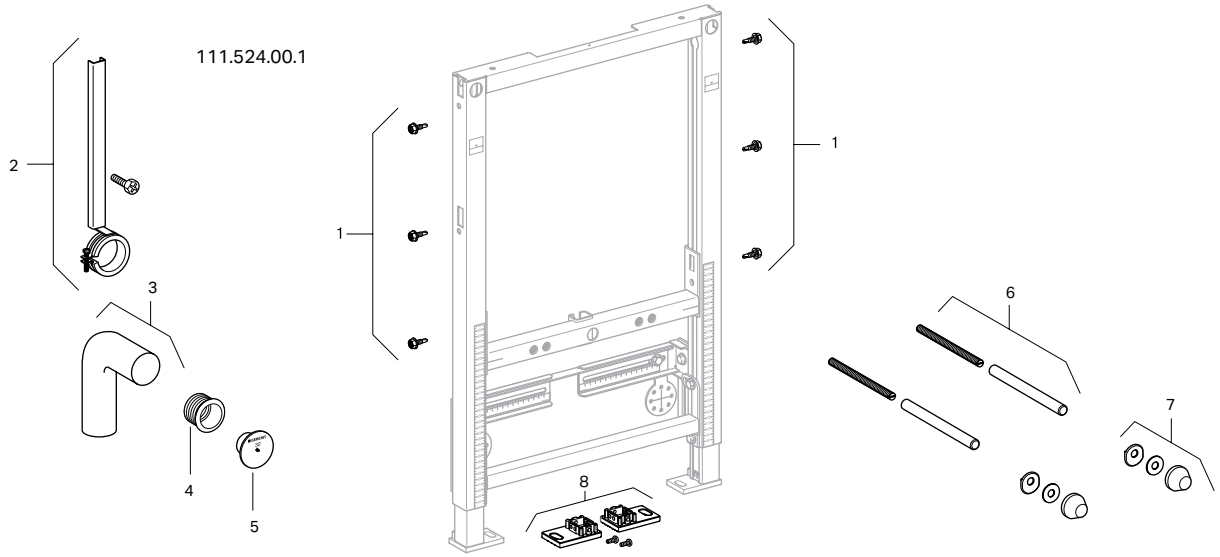

The information contained in this document is subject to change without notice.

Geberit Duofix Carrier 111.490.00.1

Item	Model No.	Description	List Price $
1	241.803.00.1	Crossbar for deck-mounted faucet	17.00
2	241.805.00.1	Pipe bracket for outlet bend	17.00
3	241.067.16.1	Outlet bend – 90 degrees	17.00
4	152.682.00.1	Standard outlet seal, EPDM, push on for Ø1.97" (Ø50 mm) tube	4.00
	152.796.00.1	Outlet seal, EPDM Ø1.97"/Ø1.57" (Ø50/40 mm)	4.00

Item	Model No.	Description	List Price $
5	111.892.00.1	Frame mounting screws for steel stud construction, galvanized, self-tapping	7.00
6	241.059.00.1	Threaded rod for wall-mounted washbasin	20.00
6.1	241.009.00.1	M10 nuts for Basin Frame set of 2	10.00
7	244.125.00.1	Foot plate set	17.00

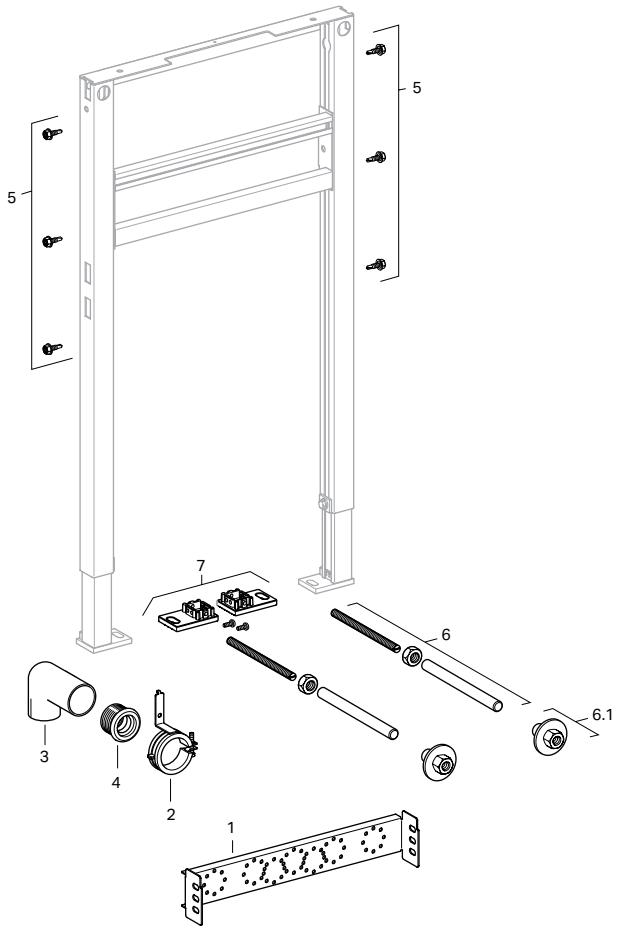

The information contained in this document is subject to change without notice.

Replacement Parts

Geberit Duofix Carrier 109.797.00.1, Sigma 2x4 Installation

Item	Model No.	Description	List Price $
2	242.418.00.1	Splash guard protection cover for Sigma Concealed Tank 2x4	10.00
3	243.345.00.1 or 243.168.00.1	Mud guard protection housing for Sigma Concealed Tank 2x4, plastic	18.00
5	119.668.00.1	Seal for supply inlet tube, EPDM	4.00
7	243.272.00.1	Mounting set for drywall constructions, for Sigma concealed cistern 8 cm	71.00
8	241.294.00.1	Flush bend with flush bend guide: d=56mm, L=5.2cm	20.00
8.1	362.771.00.1	Seal for concealed flush pipe, EPDM	4.00
9	362.796.92.1	Protection plug, plastic	7.00
13	240.851.00.1	Drop ear elbow, copper	15.00
14	243.175.00.1	Connection hose for Sigma Concealed Tank 2x4, 3/8"	27.00
14	243.357.00.1	Connection hose for Sigma Concealed Tank 2x4, 3/8" - for salt water applications	35.00
14.1	240.922.00.1	Set of seals for RFB hoses	5.00
15	243.279.00.1	Fixation clip for filling valve	6.00
16	241.469.00.1	Filling valve Type 380 for Sigma, Omega and Kappa Concealed Tanks	32.00
16.1	240.771.00.1	Seal kit for filling valve Type 380	12.00
16.2	241.670.00.1	Nipple to filling valve Type 380 for Sigma Concealed Tank 2x4	20.00
17	241.290.00.1	Dual-flush valve complete with valve seat basket for Sigma Concealed Tank 2x4 (111.728/111.798)	36.00
17.1	241.167.00.1	Yoke set for flush valves	12.00
17.2	241.292.00.1	Fixing rail to Sigma Concealed Tank 2x4	6.00
17.3	241.291.00.1	Flat gasket for flush valve for Sigma Concealed Tank 2x4	4.00
18	242.269.00.1	Valve seat basket and noise bushing for flush valve	18.00
18.1	241.293.00.1	U-cup seal for valve basket	5.00
19	243.344.00.1	Flush actuator gear box	18.00
20	242.414.00.1	Stop valve to concealed tank (blue handle)	19.00
20.1	240.298.00.1	Spindle to angle stop valve	18.00
20.2	240.347.00.1	Handle for angle stop valve (blue)	6.00
21	240.847.00.1	Stop valve to concealed tank (blue handle - for salt water applications	34.00
22	892.975.00.1	O-ring for outlet connection piece	4.00

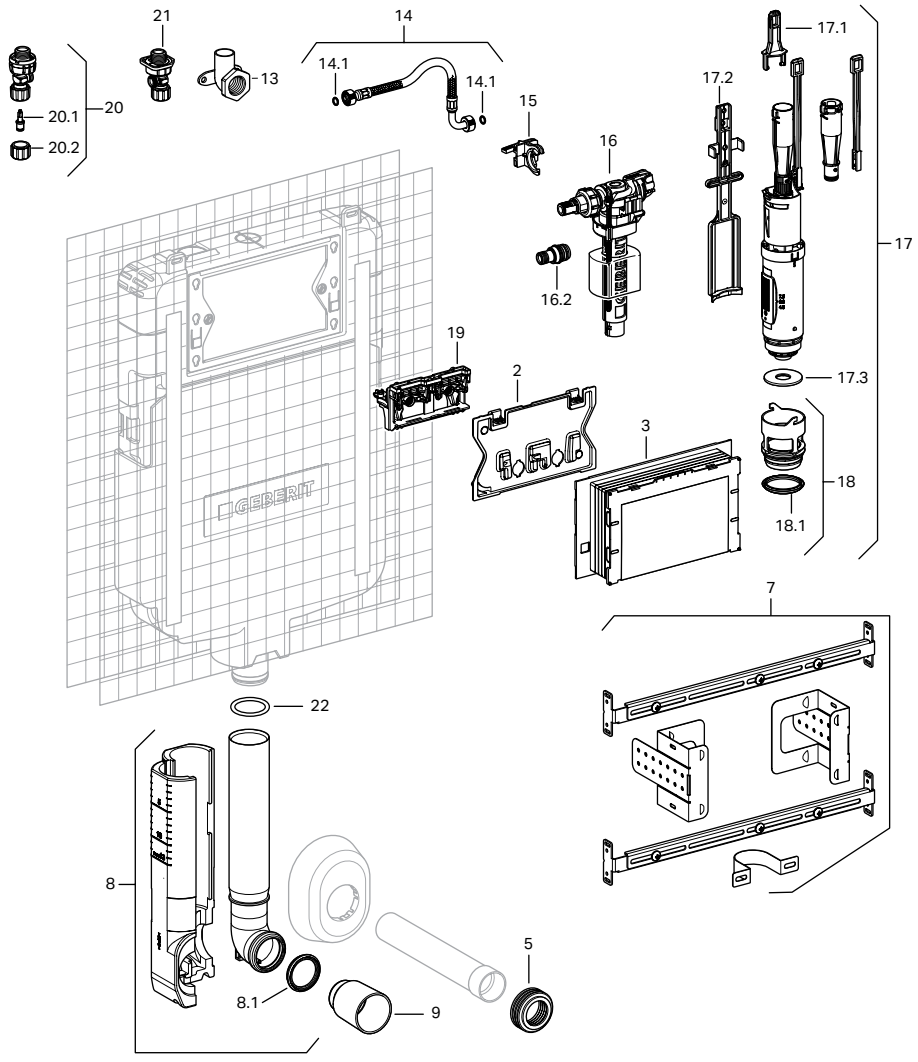

The information contained in this document is subject to change without notice.

Geberit Sigma Concealed Tank 109.304.00.5 and 109.307.00.5, 2x6 Installation

Item	Model No.	Description	List Price $
1	240.923.00.1	Fixation clip for filling valve	7.00
2	241.469.00.1	Filling valve Type 380 for Sigma, Omega and Kappa Concealed Tanks	32.00
2.1	240.771.00.1	Seal kit for filling valve Type 380	12.00
4.1	241.167.00.1	Yoke set for flush valves	12.00
4.2	816.418.00.1	Geberit flat gasket for flush valve	4.00
5.1	241.868.00.1	U-cup seal for valve basket	4.00
6	243.345.00.1 or 243.168.00.1	Mud guard protection housing for Sigma Concealed Tanks 2x6 and 2x4, plastic	18.00
7	242.315.00.1	Splash guard protection cover for Sigma Concealed Tank 2x6	10.00
8	241.829.00.1	Flush actuator gear box	10.00
9	362.771.00.1	Seal for concealed flush pipe, EPDM	4.00
10	362.796.92.1	Protection plug, plastic	7.00
11	240.921.00.1	Connection hose for Sigma Concealed Tank, 3/8"	17.00
	241.854.00.1	Connection hose for Sigma Concealed Tank, 3/8" – dezincification resistant	25.00
11.1	240.922.00.1	Set of seals for RFB hose	5.00
12	240.853.00.1	Supply angle stop (black handle)	15.00
13	240.269.00.1	Angle stop valve to concealed tank (blue handle)	23.00

Item	Model No.	Description	List Price $
13.1	240.298.00.1	Spindle to angle stop valve	18.00
13.2	240.347.00.1	Handle for angle stop valve (blue)	6.00
13.3	241.857.00.1	Counter nut, plastic	6.00
13.4	240.851.00.1	Drop ear elbow, copper	15.00
14	152.404.46.1	Connector set with mounting hardware (bowl installation kit), HDPE; Matte Chrome cover caps	50.00
14	152.404.11.1	Connector set with mounting hardware (bowl installation kit), HDPE; Matte White cover caps (accessory only)	50.00
14.1	217.713.46.1	Cover caps with leveling washer, plastic, Matte Chrome	8.00
14.2	119.668.00.1	Seal for supply inlet tube, EPDM	4.00
14.3	152.424.00.1	Seal for toilet outlet connector, EPDM	6.00
15	242.698.00.1	Concealed Flush Bend for Sigma tank	38.00
16A	245.380.00.1	1.6/0.8 GPF dual flush valve for Sigma Tanks	23.00
16B	245.400.00.1	1.28/0.8 GPF dual flush valve for Sigma Tanks	23.00
16.1	244.844.00.1	Handle set	14.00
16.2	244.244.00.1	Flat gasket seal	4.00
16.3	241.868.00.1	U-cup seal for valve basket	4.00

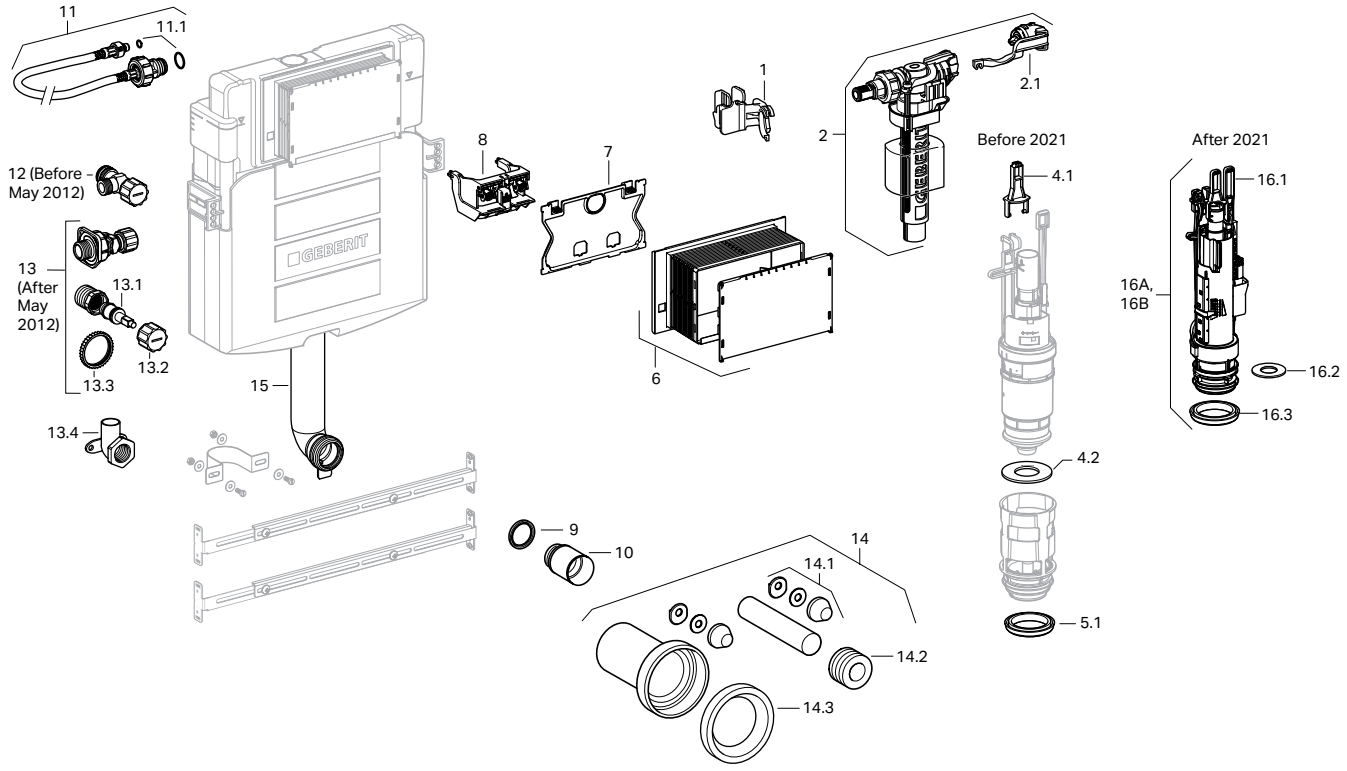

The information contained in this document is subject to change without notice.

Replacement Parts

Geberit Samba, Twist, Bolero, Sigma01, Sigma20, Sigma21, Sigma30 and Sigma50 Actuators

115.882 115.889	115.650 115.651 115.652 115.761 115.884	115.883	115.770	115.780	115.777	115.788	115.670 115.671 115.672 115.788	115.770	115.778 115.781	Actuator Dimensions: 9.7" x 6.5" (24.6 cm x 16.4 cm)

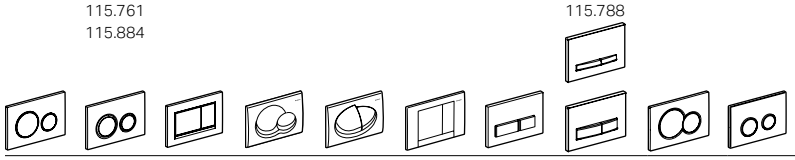

Item										Model No.	Description	List Price $
2	2	2	2	2	2	2	2	2	2	240.938.00.1	Extension set for actuator plates for Sigma Concealed Tanks 2x6, 2x4, Kappa and Omega Concealed Tanks	28.00
			3	3	3					813.514.00.1	Spring for actuator plate	4.00
						4	4			241.295.00.1	Spring for actuator plate, 10 pcs	10.00
5	5	5	5	5	5	5	5	5	5	241.873.00.1	Conversion kit for tool-free assembly (converts units manufactured prior to 04.01.2008)	37.00
5.1	5.1	5.1	5.1	5.1	5.1	5.1	5.1	5.1	5.1	241.874.00.1	Actuator bolt and rod kit, tool-free assembly	15.00
5.2	5.2	5.2	5.2	5.2	5.2	5.2	5.2	5.2	5.2	241.876.00.1	Mounting frame, tool-free assembly	17.00
				6		6	6			240.698.00.1	AV screws Twist plate + Allen key set-2	43.00
7	7			7		7	7		7	241.877.00.1	Fastening set for mounting frame tool-free assembly	56.00

115.650, 115.651, 115.652, 115.670, 115.671, 115.672, 115.761, 115.770, 115.777,115.778, 115.780, 115.781, 115.788, 115.882, 115.883, 115.884, 115.889

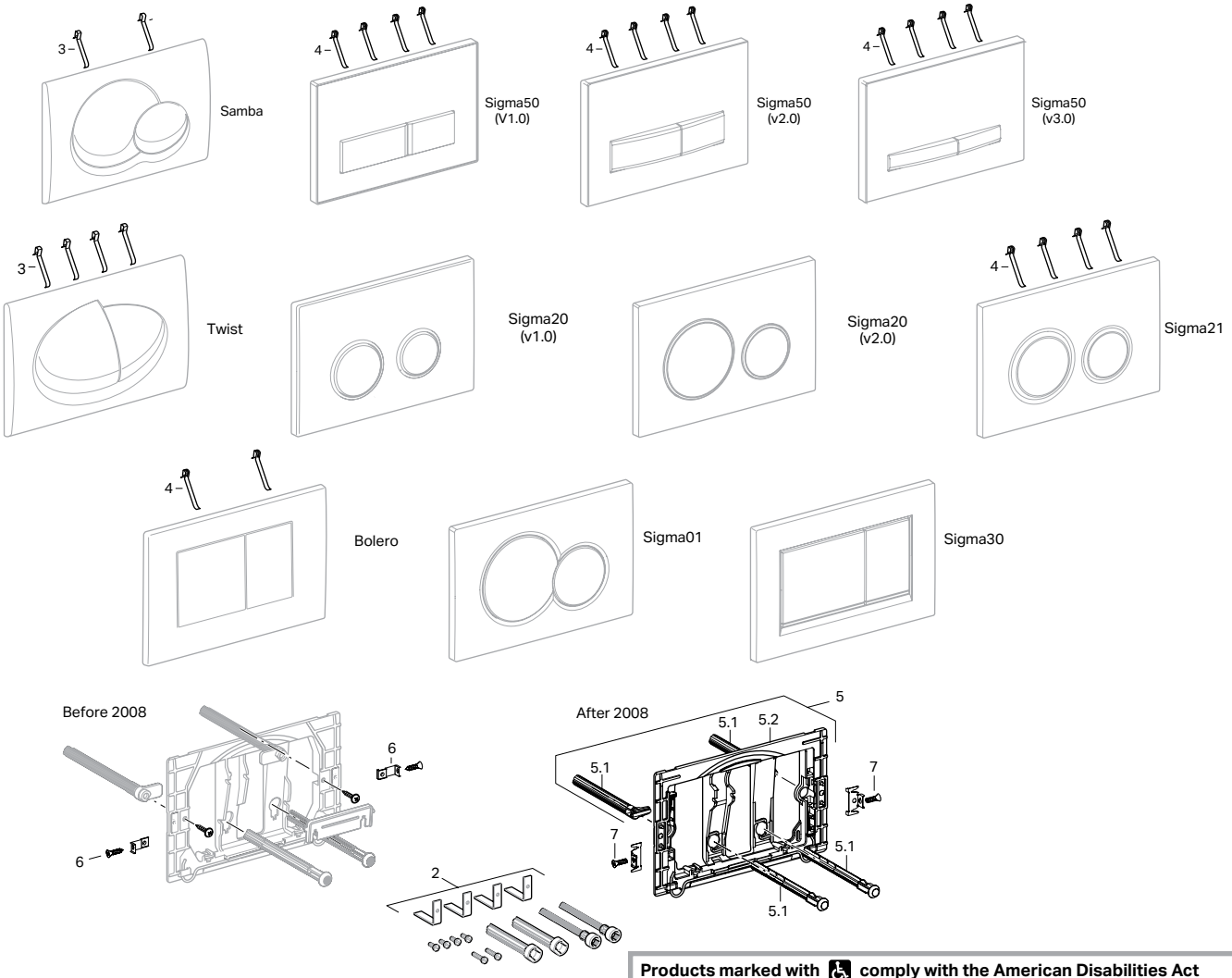

Products marked with ♿ comply with the American Disabilities Act (ADA) when installed per the requirements of the latest ADA Accessibility Guidelines (ADAAG) and/or ICC/ANSI A117.1.

The information contained in this document is subject to change without notice.

Geberit Mambo, Rumba, Tango, Sigma10 and Sigma30 Actuators

115.893	115.760	115.750	115.751	115.758	115.758/115.787	Actuator Dimensions: 9.7" x 6.5" (24.6 cm x 16.4 cm)



Item						Model No.	Description	List Price $
2	2	2	2	2	2	240.938.00.1	Extension set for actuator plates for Sigma Concealed Tanks 2x6, 2x4, Kappa and Omega Concealed Tanks	28.00
3	3	3	3		3	813.514.00.1	Spring for actuator plate	4.00
4	4	4	4	4	4	241.873.00.1	Conversion kit for tool-free assembly (converts units manufactured prior to 04.01.2008)	37.00
4.1	4.1	4.1	4.1	4.1	4.1	241.874.00.1	Actuator bolt and rod kit, tool-free assembly	15.00
4.2	4.2	4.2	4.2	4.2	4.2	241.876.00.1	Mounting frame, tool-free assembly	17.00
			4.3			241.878.00.1	Rocker mounting Mambo, tool free. From 2008	15.00
5	5		5			241.093.00.1	Fastening for cover plate UP300 set-2	22.00
6	6		6		6	241.877.00.1	Fastening set for mounting frame, tool-free assembly	56.00

115.760, 115.750, 115.751, 115.758, 115.787, 115.893

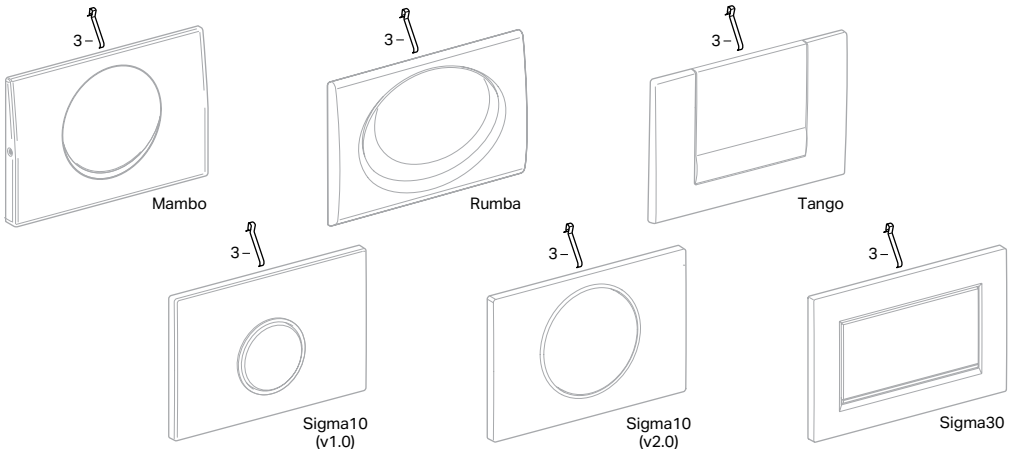

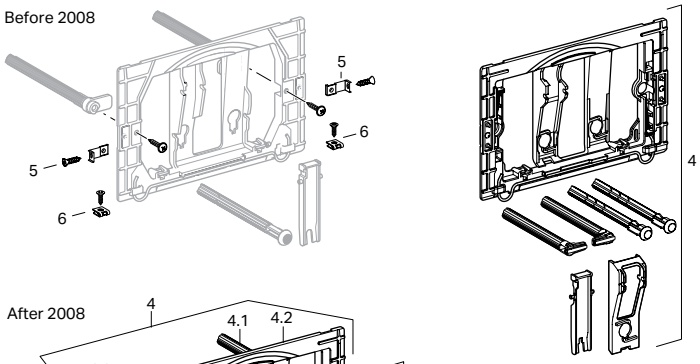

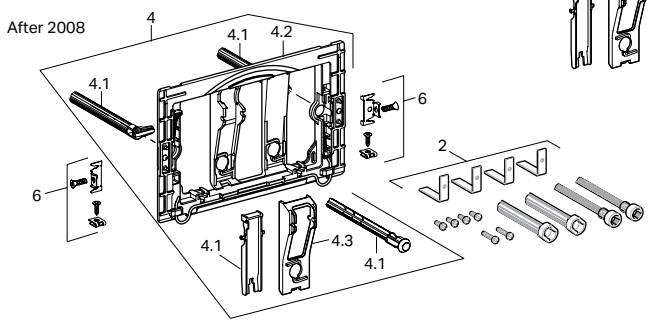

Products marked with comply with the American Disabilities Act (ADA) when installed per the requirements of the latest ADA Accessibility Guidelines (ADAAG) and/or ICC/ANSI A117.1.

The information contained in this document is subject to change without notice.

Replacement Parts

Geberit Sigma60 Actuators (2016 Version)

115.640 Actuator Dimensions: 8-7/16" x 5-3/16' (21.4 cm x 13.2 cm)



Item	Model No.	Description	List Price $
1	243.423.00.1	Protection plate Sigma60 (2016)	75.00
2	243.413.00.1	Compensation frame Sigma60 (2016)	165.00
3	243.414.00.1	Distance element Sigma60 (2016) set-2	35.00
4	243.424.00.1	Adapter Set Sigma60 (2016)	46.00
5	242.588.00.1	Actuator rod set for Omega and Sigma60	27.00
6	243.415.GH.1	Actuator plate Sigma60 (2016), Bright Chrome	657.00
6	243.415.JK.1	Actuator plate Sigma60 (2016), Lava Glass	587.00
6	243.415.JL.1	Actuator plate Sigma60 (2016), Grey Sand Glass	587.00
6	243.415.SI.1	Actuator plate Sigma60 (2016), White Glass	587.00
6	243.415.SJ.1	Actuator plate Sigma60, Black Glass	587.00
6.1	813.514.00.1	Spring for actuator plate	4.00
6.2	242.920.00.1	Stopper pin for Sigma60/Omega60 set-2	10.00
6.3	243.422.00.1	Rocker actuator plate Sigma60 (2016) set	23.00

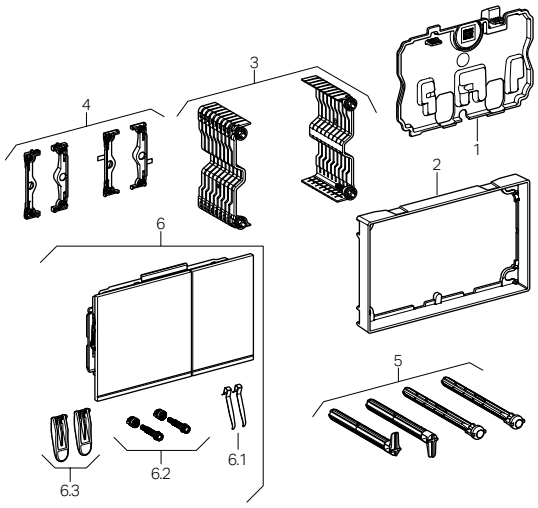

Geberit Sigma60 Actuators (pre-2016)

115.795/115.796/115.792 Actuator Dimensions: 8.7" x 5.5" (22.1 cm x 13.9 cm)



Item	Model No.	Description	List Price $
1	242.583.00.1	Protection plate	22.00
5	115.796.GH.1	Brushed Chrome trim set	289.00
5.1	813.514.00.1	Spring for actuator plate	4.00
5.2	242.920.00.1	Stopper pin for Omega60/Sigma60 set-2	10.00
5.3	243.278.00.1	Rocker plate for Omega60/Sigma60 set-2	17.00
6	242.588.00.1	Actuator rod set for Omega and Sigma60	27.00

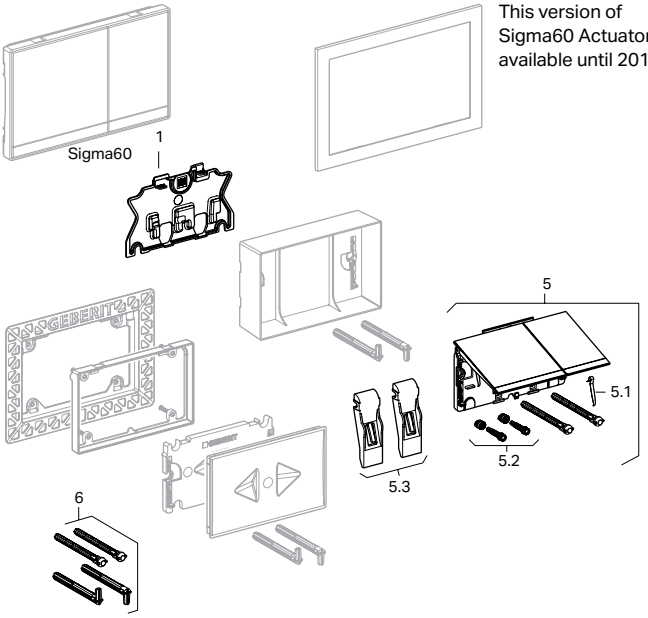

This version of Sigma60 Actuator available until 2016

Products marked with comply with the American Disabilities Act (ADA) when installed per the requirements of the latest ADA Accessibility Guidelines (ADAAG) and/or ICC/ANSI A117.1.

The information contained in this document is subject to change without notice.

Geberit Sigma70 Actuators

115.620 115.625 Actuator Dimensions: 9.5" x 6.3" (24 cm x 15.8 cm)

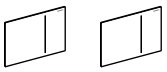

Item		Model No.	Description	List Price $
1		242.819.00.1	Protection plate for Sigma Concealed Tank 2x6	23.00
	1	243.084.00.1	Protection plate for Sigma Concealed Tank 2x4	65.00
2	2	242.813.FW.1	Actuator plate Sigma70, Brushed Stainless Steel	259.00
2	2	243.813.JK.1	Actuator plate Sigma70, Lava Glass	218.00
2	2	243.813.JL.1	Actuator plate Sigma70, Grey Sand Glass	218.00
2	2	242.813.SI.1	Actuator plate Sigma70, White Glass	218.00
2	2	242.813.SJ.1	Actuator plate Sigma70, Black Glass	218.00
2	2	242.813.00.1	Actuator plate Sigma70 customer supplied inlay	208.00
2.1	2.1	242.814.00.1	Mounting frame Sigma70	38.00
2.1.1	2.1.1	813.514.00.1	Spring for actuator plate	4.00
2.1.2	2.1.2	241.874.00.1	Actuator rod set mount w/o tool	15.00
3	3	243.297.00.1	Double pneumatic hose, 78.74" (2 m), dual-flush (Green/Clear)	10.00
4		242.825.00.1	Conversion set flush valve Sigma Concealed Tank, 4.72" (12 cm) and Omega Concealed Tank 2x6	17.00
	5	242.826.00.1	Conversion set flush valve Sigma Concealed Tank, 3.16" (8 cm) 2x4	17.00
6	6	242.820.00.1	Hydraulic flushing device, 1-6 bar (15-87 psi)	312.00
		243.461.00.1	Hydraulic flushing device, 1-3 bar (15-44 psi). Optional replacement for low pressure service	312.00
6.1	6.1	242.822.00.1	Spare parts set for hydraulic lifter	12.00
6.2		243.170.00.1	Support block hydraulic servo lifter for 2x6 Sigma Concealed Tank	18.00
	6.3	243.171.00.1	Support block hydraulic servo lifter for 2x4 Sigma Concealed Tank	18.00
	6.4	243.347.00.1	Support block hydraulic servo lifter for 2x4 Sigma Concealed Tank (2016 version)	18.00
7		242.824.00.1	Connection hose complete for Sigma Concealed Tank, 4.72" (12 cm) 2x6	55.00
	8	242.823.00.1	Connection hose complete for Sigma Concealed Tank, 3.16" (8 cm) 2x4	76.00

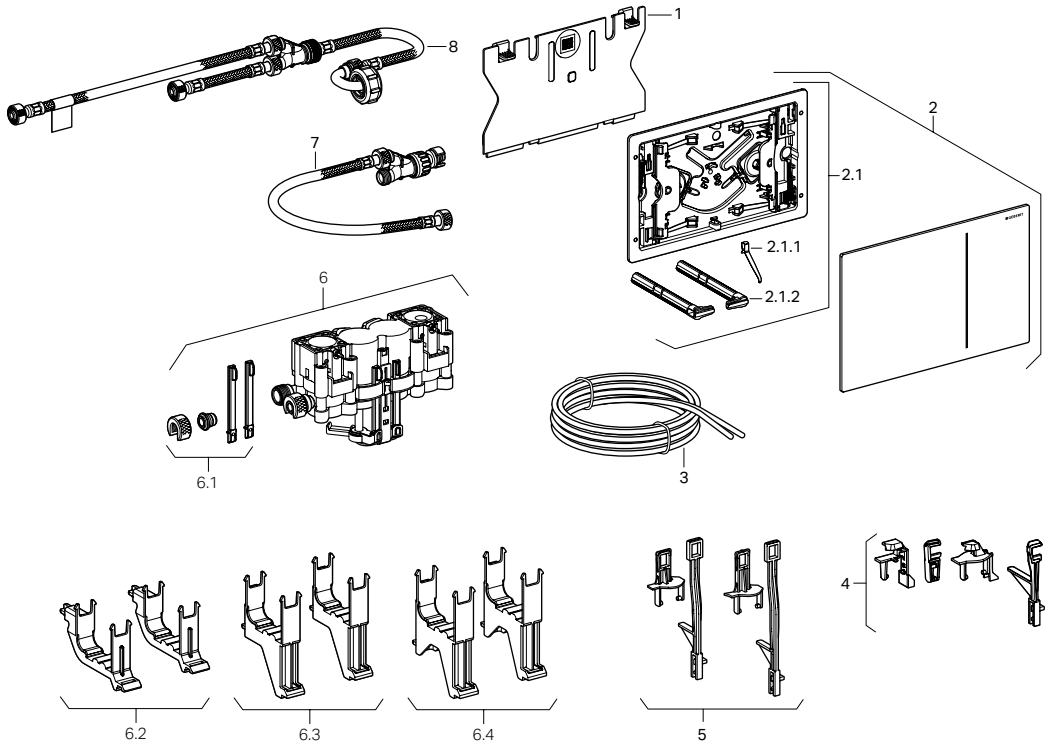

Products marked with comply with the American Disabilities Act (ADA) when installed per the requirements of the latest ADA Accessibility Guidelines (ADAAG) and/or ICC/ANSI A117.1.

The information contained in this document is subject to change without notice.

GEBERIT INSTALLATION SYSTEMS

Replacement Parts

Geberit Sigma80 Actuators

116.090	116.091	116.092	Actuator Dimensions: 9.75" x 6.5" (24.6 cm x 16.4 cm)



Item			Model No.	Description	List Price $
1	1	1	242.975.11.1	Handle crown for flush valve	6.00
	2		242.424.00.1	Lifting device WC-control, 2x4	218.00
3			241.150.00.1	Lifting device WC-control w/servomotor, 2x6	192.00
4	4	4	242.617.00.1	Mounting frame Sigma80	60.00
5	5	5	242.618.SG.1	Actuator plate Sigma80 Black	1,067.00
5	5	5	242.618.SM.1	Actuator plate Sigma80 Mirror	1,067.00
6	6	6	241.831.00.1	Extension mains cable 78.74" (2.0 m) WC-control	84.00
7	7	7	242.658.00.1	Connection cable 78.74" (2.0 m) WC-control Sigma80	61.00
8	8	8	241.161.00.1	Cover for housing for electric socket	15.00
9	9	9	241.149.00.1	Power supply unit WC-control	152.00
10	10	10	241.302.00.1	Housing for electric socket for PSU	19.00
		11	243.356.00.1	Lifting device WC-control 2x4 (2016 version)	192.00

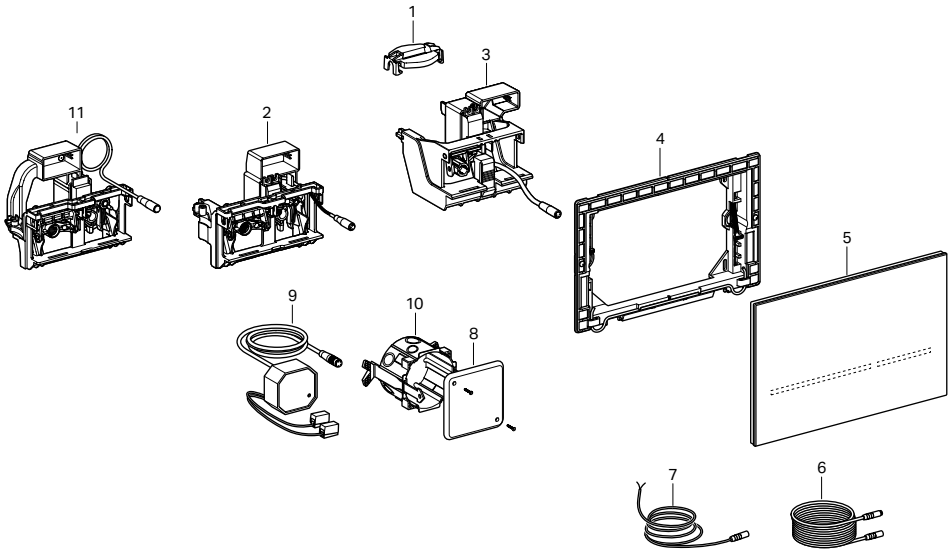

Products marked with comply with the American Disabilities Act (ADA) when installed per the requirements of the latest ADA Accessibility Guidelines (ADAAG) and/or ICC/ANSI A117.1.

The information contained in this document is subject to change without notice.

Geberit Hands-Free Sigma10 and Mambo Actuator

115.891	115.890	115.856	115.907	115.908	CR115-6 CR115-8	CR115-7	Actuator Dimensions: 9.7" x 6.5" (24.6 cm x 16.4 cm)

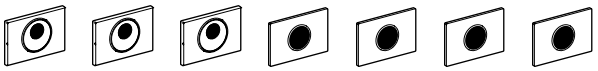

Item							Model No.	Description	List Price $
1	1		1	1	1	1	241.150.00.1	Lifting device with servo-motor for WC-control	192.00
2	2		2	2	2	2	241.303.00.1	Protection plate for WC-control Sigma10 and Mambo	10.00
3	3	3	3	3	3	3	241.476.00.1	Electronic sensor for WC-control	454.00
3.1				3.1	3.1		242.870.00.1	Battery housing	180.00
4	4		4	4			242.871.00.1	Mounting frame for WC-control	45.00
5	5	5					242.781.SN.1	IR actuator plate for WC-control Sigma10 and Mambo	312.00
5.1	5.1	5.1	5.1	5.1			241.478.00.1	IR window with adapter for WC-control Sigma10 and Mambo	38.00
6				6	6		—	2 batteries, LR20 (standard) "D" cells	—
	7	7	7			7	115.861.00.1	Control installation set	175.00
	7.1	7.1	7.1			7.1	241.149.00.1	Power supply unit	152.00
	7.2	7.2	7.2			7.2	241.161.00.1	Cover for housing for electric socket	15.00
	7.3	7.3	7.3			7.3	241.302.00.1	Housing for electric socket	19.00
	8	8	8			8	241.831.00.1	Extension mains cable	84.00
9	9	9	9	9	9	9	242.975.11.1	Flush valve crown	6.00
		10			10	10	243.356.00.1	Lifting device WC-control 2x4 (2016 version)	192.00
		11			11	11	242.425.00.1	Mounting frame for Mambo	126.00
		12			12	12	241.877.00.1	Fastening set for mounting frame. Tool free assembly.	56.00
			13	13	13	13	242.782.KH.1	Bright Chrome-Matte Chrome	124.00
			13	13	13	13	242.782.KJ.1	White-Bright Chrome	124.00
			13	13	13	13	242.782.KK.1	White, Gold-Plated	217.00
			13	13	13	13	242.782.KL.1	White, Matte Chrome	124.00
			13	13	13	13	242.782.KM.1	Black-Bright Chrome	124.00
			13	13	13	13	242.782.KN.1	Matte Chrome-Bright Chrome	124.00
			13	13	13	13	242.782.SN.1	Stainless Steel Brushed, Polished	259.00

115.891 (Battery/DC), 115.890 (AC), 115.856 (AC), 115.907 (AC), 115.908 (Battery/DC)

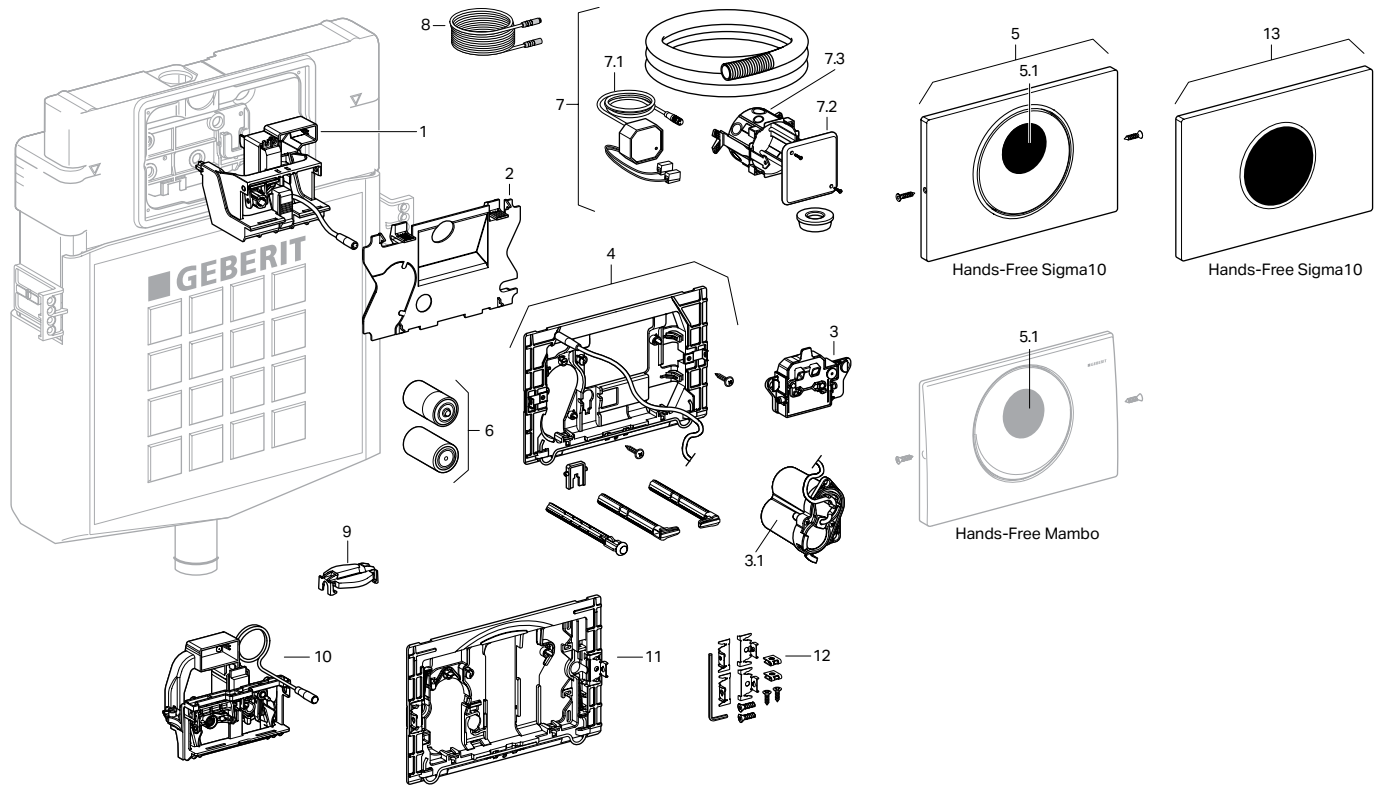

Products marked with comply with the American Disabilities Act (ADA) when installed per the requirements of the latest ADA Accessibility Guidelines (ADAAG) and/or ICC/ANSI A117.1.

The information contained in this document is subject to change without notice.

GEBERIT INSTALLATION SYSTEMS

Replacement Parts

Geberit Type 01 and Type 10 Remote Push Button Actuators

116.040	116.041	116.042	116.043	116.044	116.045	116.050	116.055	116.056	116.057	Model No.	Description	List Price $
						1			1	242.939.00.1	Nut remote control for furniture	18.00
2	2	2	2	2	2		2	2		243.130.00.1	Concealed housing w/ protection cover	27.00
							3	3	3	243.398.KH.1	Actuator protruding Type 10 dual flush Matte Chrome	149.00
							3	3	3	243.398.KK.1	Actuator protruding Type 10 dual flush Alpine White	131.00
							3	3	3	242.398.KM.1	Actuator protruding Type 10 dual flush, Black	149.00
				4	4					243.396.11.1	Actuator protruding Type 01 dual flush Polished Chrome/White	101.00
5	5									243.395.11.1	Actuator Type 01 pneumatic single flush, Alpine White	92.00
5	5									243.395.21.1	Actuator Type 01 pneumatic single flush, Bright Chrome	101.00
		6	6			6				243.397.11.1	Actuator Type 01 pneumatic dual flush, Alpine White	101.00
		6	6			6				243.397.21.1	Actuator Type 01 pneumatic dual flush, Bright Chrome	131.00
						6				243.397.46.1	Actuator Type 01 pneumatic dual flush, Matte Chrome	131.00
7	7	7	7	7	7					242.961.11.1	Collar for Type 01 for concealed actuator, Alpine White	31.00
7	7	7	7							242.961.21.1	Collar for Type 01 for concealed actuator, Bright Chrome	31.00
						8				242.962.11.1	Collar for Type 01 furniture actuator, Alpine White	18.00
						8				242.962.21.1	Collar for Type 01 furniture actuator, Bright Chrome	31.00
						8				242.962.46.1	Collar for Type 01 furniture actuator, Matte Chrome	31.00
							9	9		242.963.KH.1	Collar for Type 10 for concealed actuator, Matte Chrome	38.00
							9	9		242.963.KJ.1	Collar for Type 10 for concealed actuator, Polished Chrome/White	38.00
							9	9		242.963.KM.1	Collar for Type 10 for concealed actuator, Black	38.00
									10	242.964.KH.1	Collar for Type 10 furniture actuator, Matte Chrome	38.00
									10	242.964.KJ.1	Collar for Type 10 furniture actuator, Polished Chrome/White	38.00
11	11									242.965.00.1	Fastening ring for Type 01 S/M actuator	35.00
12	12									256.000.00.1	Pneumatic hose 3.5 m	9.00
13	13									240.573.00.1	Pneumatic flushing device for WC-control single flush (Sig2x6/Sig2x4)	27.00
	14		14		14			14		242.594.00.1	Pneumatic flushing device dual for UP720/UP172 (111.728)	58.00
		15		15		15	15		15	240.574.00.1	Pneumatic flushing device for WC-control dual flush (Sig2x6/Sig2x4)	33.00
		16	16	16	16	16	16	16	16	240.575.00.1	Double pneumatic hose for dual flush 78.74" (2 m) (Blue/Clear)	10.00
17	17	17	17	17	17	17	17	17	17	243.703.00.1	Geberit set of compression springs for remote flush actuation types 01 and 10	22.00
18	18	18	18	18	18	18	18	18	18	244.601.00.1	Geberit set of adapter hoses d4–5, for remote flush actuation, pneumatic	27.00

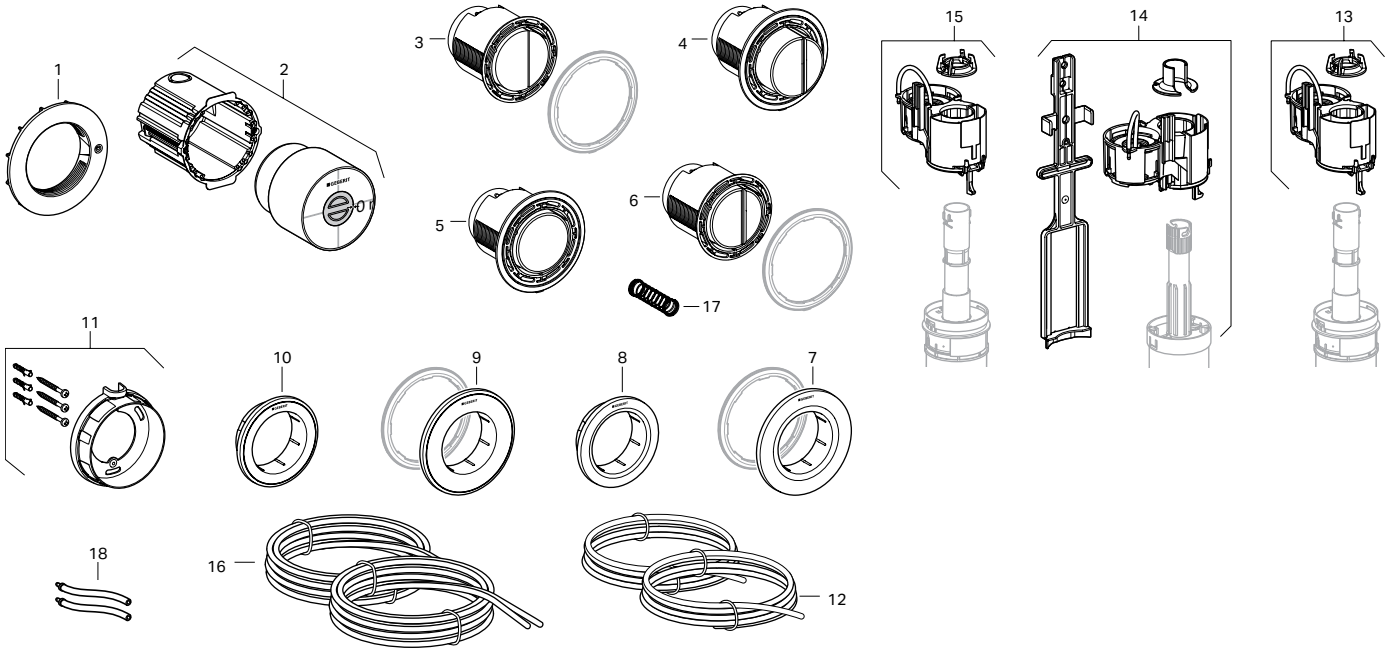

Products marked with comply with the American Disabilities Act (ADA) when installed per the requirements of the latest ADA Accessibility Guidelines (ADAAG) and/or ICC/ANSI A117.1.

The information contained in this document is subject to change without notice.

Geberit Type 70 Remote Dual-Flush Buttons

115.630	115.635	115.084	Actuator Dimensions: 4.4" x 1.9" (11.2 cm x 5 cm)

Item			Model No.	Description	List Price $
1			242.819.00.1	Protection plate Type 70, for 2x6 Sigma Concealed Tank	23.00
	1		243.084.00.1	Protection plate Type 70, for 2x4 Sigma Concealed Tank	65.00
3	3	3	242.939.00.1	Nut remote control for furniture installations	18.00
4	4	4	242.956.00.1	Ready-to-fit set remote flush actuation Type 70	201.00
5	5	5	242.957.FW.1	Remote flush actuation Type 70 Stainless Steel	412.00
			242.957.JK.1	Remote flush actuation Type 70, Lava Glass	302.00
			242.957.JL.1	Remote flush actuation Type 70, Grey Sand Glass	302.00
			242.957.SI.1	Remote flush actuation Type 70 White Glass	302.00
			242.957.SJ.1	Remote flush actuation Type 70 Black Glass	302.00
6	6	6	243.297.00.1	Double pneumatic hose for dual-flush 2 m (Green/Clear)	10.00
7	7	7	242.949.00.1	Installation set remote flush actuation Type 70	65.00
8		8	242.825.00.1	Conversion set flush valve for 2x6 Sigma/Omega Concealed Tank	17.00
	9		242.826.00.1	Conversion set flush valve for 2x4 Sigma Concealed Tank	17.00
10	10	10	242.820.00.1	Hydraulic flushing device, 1-6 bar (15-87 psi)	312.00
			243.461.00.1	Hydraulic flushing device, 1-3 bar (15-44 psi). Optional replacement for low pressure service	312.00
10.1	10.1	10.1	242.822.00.1	Spare parts set for hydraulic lifter	12.00
10.2			243.170.00.1	Support block hydraulic servo lifter for 2x6 Sigma Concealed Tank	18.00
	10.3		243.171.00.1	Support block hydraulic servo lifter for 2x4 Sigma Concealed Tank	18.00
		10.4	243.169.00.1	Support block hydraulic servo lifter for 2x6 Omega Concealed Tank	18.00
	10.5		243.347.00.1	Support block hydraulic servo lifter for 2x4 Sigma Concealed Tank (2016 version)	18.00
11			242.824.00.1	Connection hose complete for Type 70, for 2x6 Sigma Concealed Tank	55.00
	12		242.823.00.1	Connection hose complete for Type 70, for 2x4 Sigma Concealed Tank	76.00
		13	242.958.00.1	Connection hose complete for Type 70, for 2x6 Omega Concealed Tank	129.00

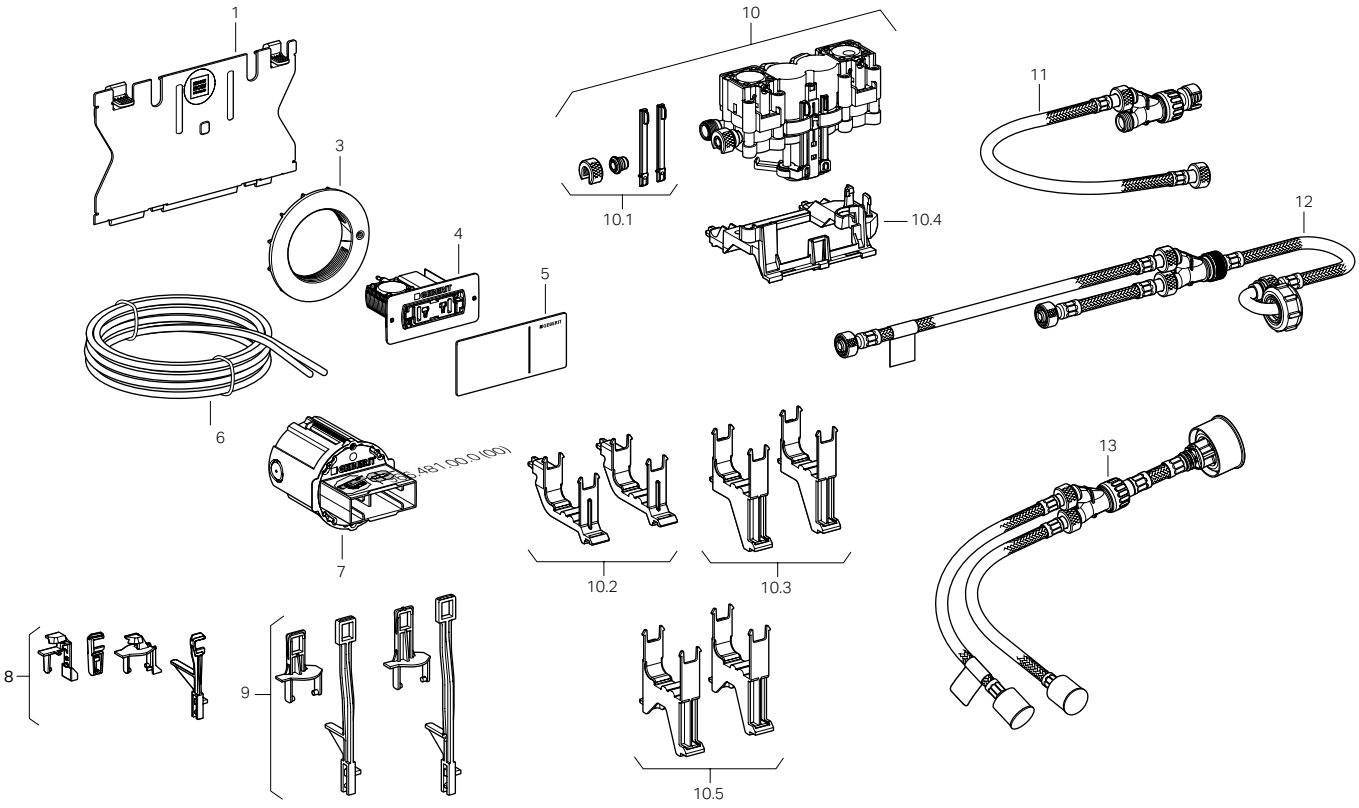

The information contained in this document is subject to change without notice.

GEBERIT INSTALLATION SYSTEMS

Replacement Parts

Geberit Rectangular Remote Push Button Actuators

115.932 115.934 Actuator Dimensions: 5.06" x 2.91" (12.9 cm x 7.4 cm)
116.051 116.052
116.053 116.054




Item		Model No.	Description	List Price $
1	1	244.505.00.1	Installation set for remote flush actuation, rectangle design, pneumatic	29.00
2	2	244.501.00.1	Pneumatic cylinder set for remote flush actuation, rectangle design, pneumatic (2 pc.)	33.00
3		242.849.GH.1	Actuator for remote flush actuation, rectangle design, pneumatic: Chrome-Plated, Brushed; Chrome-Plated, Brushed	199.00
3		242.849.KA.1	Actuator for remote flush actuation, rectangle design, pneumatic: Bright Chrome-Plated; Chrome-Plated, Brushed	121.00
3		242.849.KV.1	Actuator for remote flush actuation, rectangle design, pneumatic: Black, High-Gloss; Chrome-Plated, Brushed	121.00
	3	244.504.21.1	Actuator for remote flush actuation, rectangle design, pneumatic, protruding: bright Chrome-Plated	121.00
4	4	240.574.00.1	Pneumatic lifter, dual-flush	33.00
5	5	242.594.00.1	Pneumatic flushing device single-flush UP720, carrier model 111.728	58.00
6	6	240.575.00.1	Dual pneumatic air hose	10.00

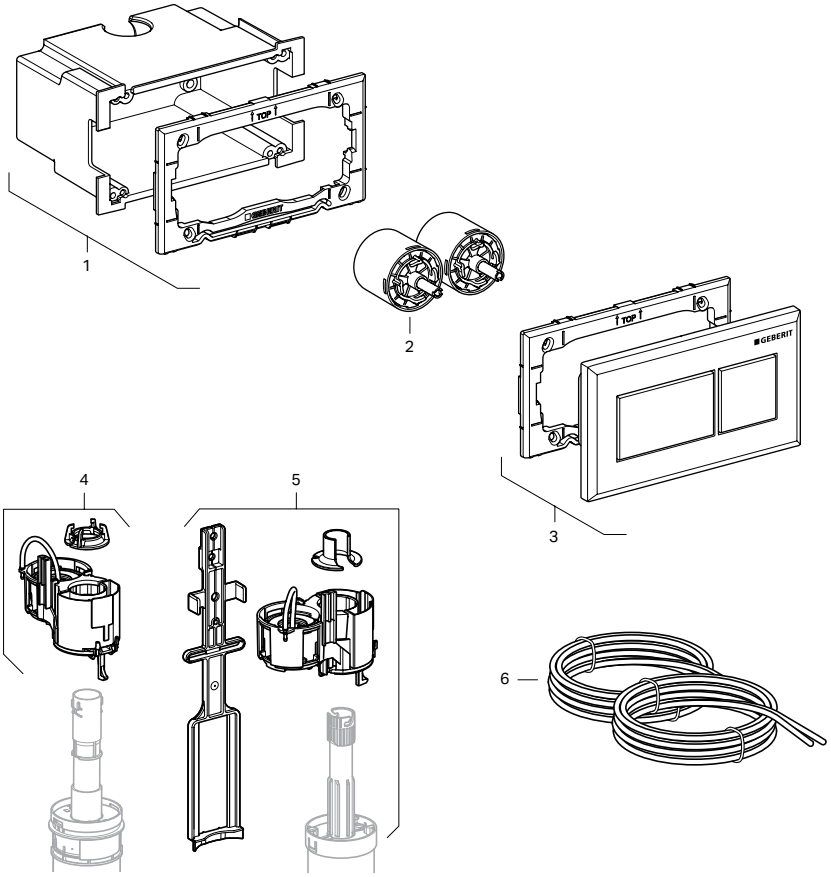

Products marked with comply with the American Disabilities Act (ADA) when installed per the requirements of the latest ADA Accessibility Guidelines (ADAAG) and/or ICC/ANSI A117.1.

The information contained in this document is subject to change without notice.

Inactive Geberit Square Remote Push Button Actuators

115.941/ 115.946	115.942	115.991	Actuator Dimensions: 4.25" x 4.25" (10.8 cm x 10.8 cm)



Item			Model No.	Description	List Price $
1			240.573.00.1	Pneumatic flushing device for WC flush control single	27.00
1.1	1.1		880.328.11.1	Lifter flange dual-flush valve system	7.00
2		2	240.571.11.1	Wall mount actuator for pneumatic single-flush for WC flush control, Alpine White	61.00
2		2	240.571.KA.1	Wall mount actuator for pneumatic single-flush for WC flush control, Matte Chrome	87.00
3		3	256.000.00.1	Pneumatic hose	9.00
4	4	4	240.582.00.1	Concealed housing	27.00
	5		242.401.00.1	Brass weight for WC flush control pneumatic dual-flush	43.00
	6		240.574.00.1	Pneumatic flushing device for WC flush control dual-flush	33.00
	7		240.572.11.1	Wall mount actuator for pneumatic dual-flush for WC flush control, Alpine White	67.00
			240.572.KA.1	Wall mount actuator for pneumatic dual-flush for WC flush control, Matte Chrome	109.00
	8		240.575.00.1	Double pneumatic hose for dual-flush (Blue/Clear)	10.00
		9	242.594.00.1	Pneumatic flushing device single-flush UP720, carrier model 111.728	58.00
10			240.004.00.1	Conversion set for single flush valves 1985 - 1998	27.00

115.941, 115.946 (Sigma 2x6 or Omega 2x6)

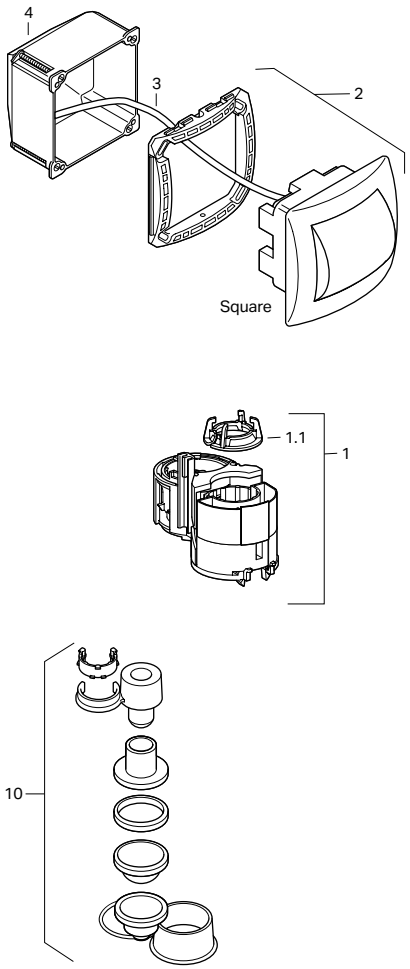

115.942 (Sigma 2x6 or Omega 2x6)

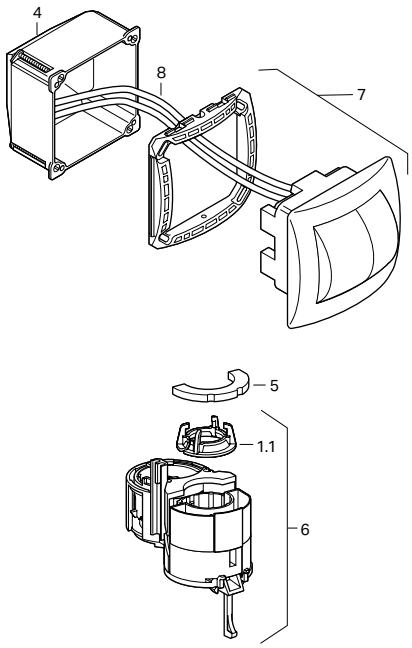

115.991 (Sigma 2x4)

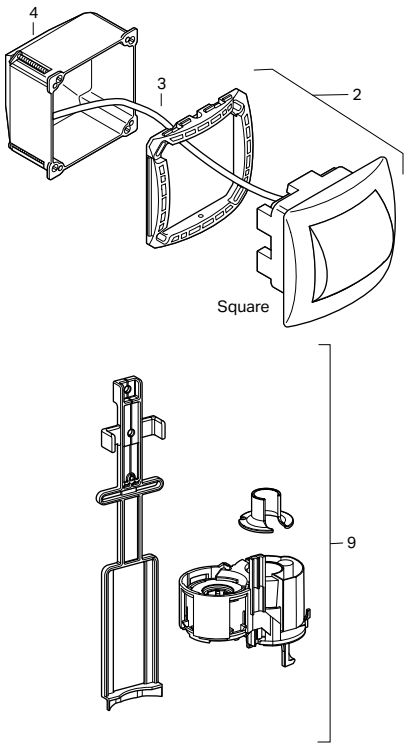

The information contained in this document is subject to change without notice.

Replacement Parts

Inactive Geberit Round Remote Push Button Actuators

115.114	115.992	115.999	Actuator Dimensions: Round Single-Flush 2.5" (6.4 cm) dia., Round Dual-Flush 2.44" (6.2 cm) dia., Halfmoon 3.25" (8 cm) dia.

Item			Model No.	Description	List Price $
1			240.573.00.1	Pneumatic flushing device for WC-control single-flush. From 1999	27.00
1.1	1.1	1.1	880.328.11.1	Lifter flange dual-flush valve system	7.00
2			241.199.11.1	Wall mount manual actuator pneumatic single-flush	67.00
			241.199.21.1	Wall mount manual actuator pneumatic single-flush	89.00
2.1			240.794.00.1	Bellows to pneumatic actuator	7.00
3			256.000.00.1	Pneumatic hose	9.00
4			240.004.00.1	Conversion set for single flush valves 1985 - 1998	27.00
	5	5	240.574.00.1	Pneumatic flushing device for WC-control dual-flush	33.00
	6		242.380.21.1	Actuator WC-control pneumatic dual-flush set	146.00
	7	7	240.575.00.1	Double pneumatic hose for dual-flush (Blue/Clear)	10.00
	8	8	242.401.00.1	Brass weight 28.5g for WC-control pneumatic dual-flush	43.00
		9	241.413.21.1	Wall mount manual actuator, pneumatic dual-flush for WC flush control	85.00
		9.1	242.548.00.1	Collar for wall mount actuator WC flush control	18.00

115.114 (Sigma 2x6 or Omega 2x6)

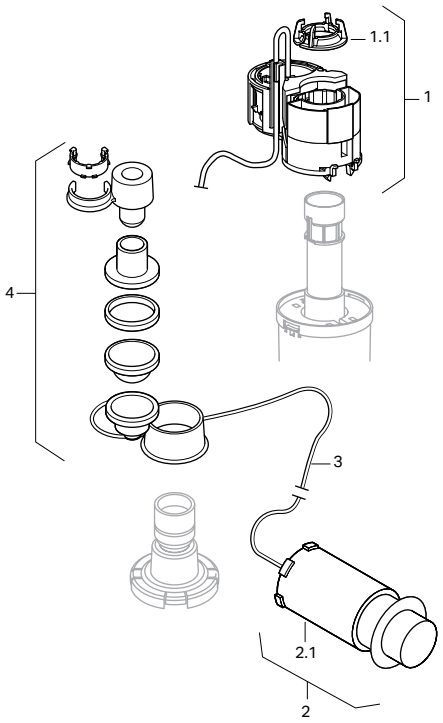

115.992 (Sigma 2x6 or Omega 2x6)

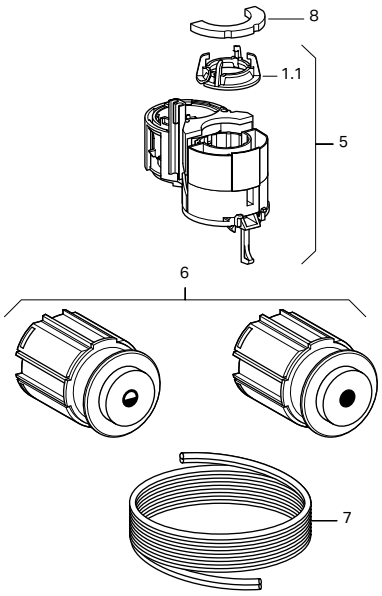

115.999 (Sigma 2x6 or Omega 2x6)

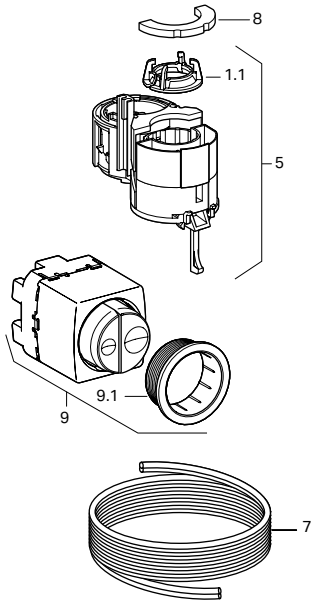

The information contained in this document is subject to change without notice.

Geberit Cover Plates, Sigma for Use with Flush Buttons

115.764 115.766 115.768

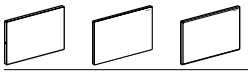

Actuator Dimensions: 9.7" x 6.5" (24.6 cm x 16.4 cm)

Item			Model No.	Description	List Price $
2	2	2	241.093.00.1	Fastening for cover plate UP300 set-2	22.00
3	3	3	241.873.00.1	Conversion set for tool-free installation	37.00
3.1	3.1	3.1	241.874.00.1	Actuator rod set mount w/o tool (From 2008)	15.00
3.2	3.2	3.2	241.876.00.1	Mounting frame tool-free (From 2008)	17.00
4	4	4	241.877.00.1	Screw for Twist, Tango, Mambo set-2. For tool-free mounting frame.	56.00
5	5	5	240.938.00.1	Extension set for C/C UP200/UP300	28.00

< 2008

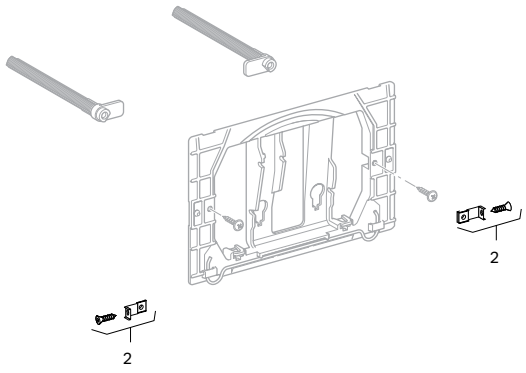

> 2008

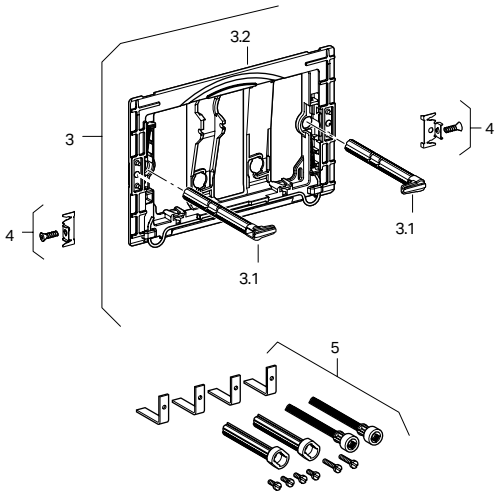

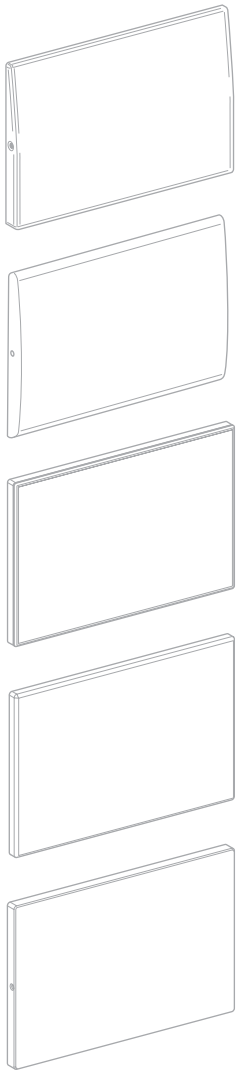

The information contained in this document is subject to change without notice.

GEBERIT INSTALLATION SYSTEMS

Replacement Parts

Geberit Cover Plates, Sigma, Surface-Even

115.696 115.697 115.698 115.699

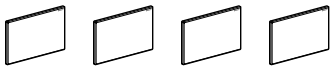

Item				Model No.	Description	List Price $
1		1		243.303.00.1	Support plate Sigma	57.00
	2		2	243.307.21.1	Support plate Sigma with sight frame	117.00
3	3	3	3	243.301.00.1	Mechanism plate	24.00
3.1	3.1	3.1	3.1	242.588.00.1	Actuator rod set for Omega and Sigma60	27.00
4	4	4	4	243.110.00.1	Distance element Omega60 set-2	30.00
5	5	5	5	243.304.00.1	Adapter plate Sigma surface even cover plate	61.00
		6	6	243.168.00.1	Rough install set surface even C/C for Sigma 12 cm	18.00

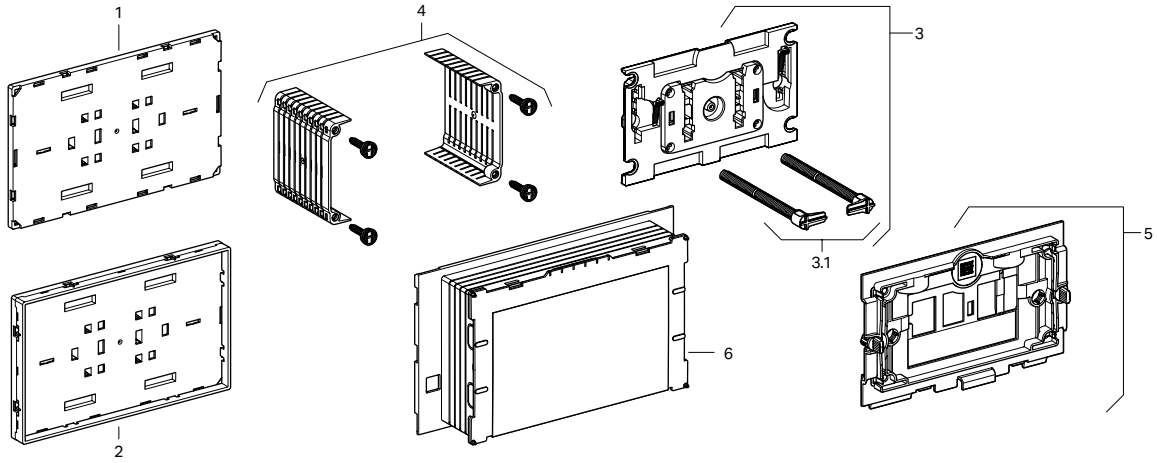

Geberit Cover Plates, Omega, Surface-Even

115.087 115.088

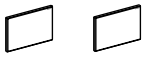

Item		Model No.	Description	List Price $
1		243.299.00.1	Support plate Omega	61.00
	2	243.306.21.1	Support plate Omega with sight frame	154.00
3	3	243.301.00.1	Mechanism plate	24.00
3.1	3.1	242.588.00.1	Actuator rod set for Omega and Sigma60	27.00
4	4	243.110.00.1	Distance element Omega60 set-2	30.00
5	5	243.302.00.1	Protection plate for Omega cover plate, surface even	35.00

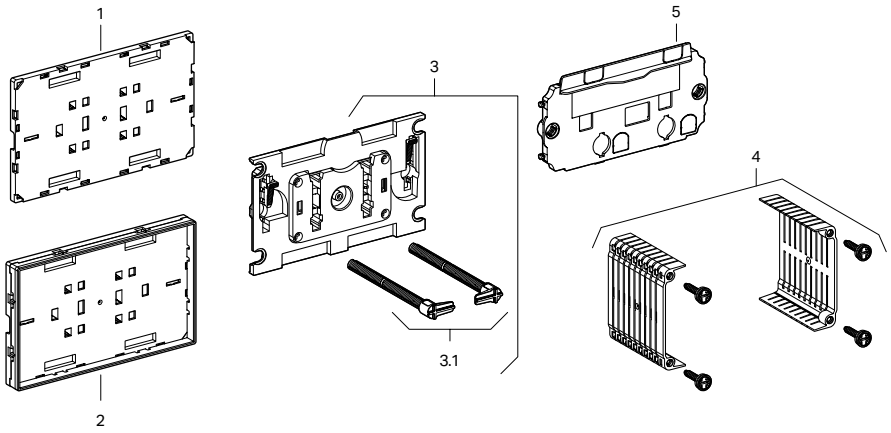

The information contained in this document is subject to change without notice.

Geberit Omega20 and Omega30 Actuators

115.085 115.080 115.082

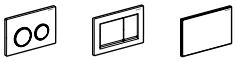

Actuator Dimensions: 8.3" x 5.6" (21.2 cm x 14.2 cm)

Item			Model No.	Description	List Price $
1	1	1	243.108.00.1	Mounting frame Omega	18.00
2	2	2	242.588.00.1	Rod set to Omega and Sigma60	27.00
3	3	3	240.938.00.1	Extension set for actuator plates for Sigma Concealed Tanks 2x6 and 2x4, Kappa and Omega Concealed Tanks	28.00

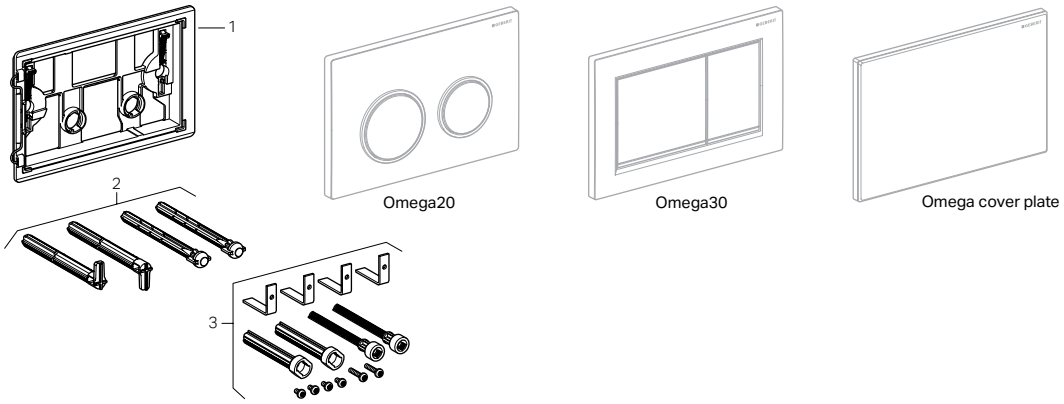

Geberit Omega60 Actuators

115.081



Actuator Dimensions: 7.2" x 4.5" (18.4 cm x 11.4 cm), 8.2"x5.5" (20.9 cm x 13.9 cm with frame

Item	Model No.	Description	List Price $
1	243.109.00.1	Compensation frame Omega60	113.00
2	243.110.00.1	Distance element Omega60 set-2	30.00
3	242.588.00.1	Rod set to Omega and Sigma60	27.00
4	243.118.GH.1	Actuator plate Omega60, Brushed Chrome	572.00
4	243.118.JK.1	Actuator plate Omega60, Lava Glass	511.00
4	243.118.JL.1	Actuator plate Omega60, Grey Sand Glass	511.00
4	243.118.SI.1	Actuator plate Omega60, White Glass	511.00
4	243.118.SJ.1	Actuator plate Omega60, Black Glass	511.00
4.1	813.514.00.1	Spring for actuator plate	4.00
4.2	242.920.00.1	Stopper pin for Omega60/Sigma60 set-2	10.00
4.3	243.294.00.1	Rocker plate for Omega60/Sigma60 set-2	17.00

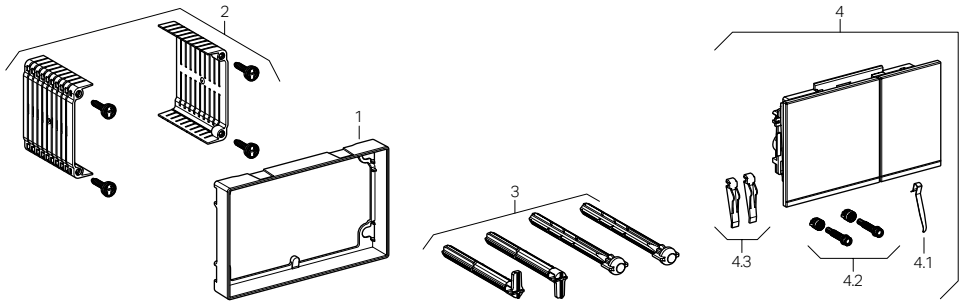

Products marked with comply with the American Disabilities Act (ADA) when installed per the requirements of the latest ADA Accessibility Guidelines (ADAAG) and/or ICC/ANSI A117.1.

The information contained in this document is subject to change without notice.

GEBERIT INSTALLATION SYSTEMS

Replacement Parts

Inactive Geberit Kappa Actuators

115.228	115.258	115.260	115.680	Actuator Dimensions: 8.3" x 5.6" (21.2 cm x 14.2 cm)

Item				Model No.	Description	List Price $
1	1	1	—	241.295.00.1	Spring for actuator plate, 10 pcs	10.00
2	2	2	2	240.639.00.1	Actuator lever rod set for Kappa Concealed Tank	9.00
3	3	3	3	240.646.00.1	Mounting frame for Kappa Concealed Tank/Artline	15.00
4	4	4	4	240.938.00.1	Extension set for actuator plates for Sigma Concealed Tanks 2x6 and 2x4, Kappa and Omega Concealed Tanks	28.00

115.680

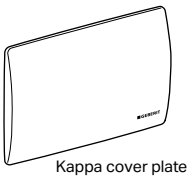

Kappa cover plate

115.228

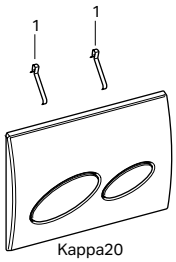

Kappa20

115.258/115.260

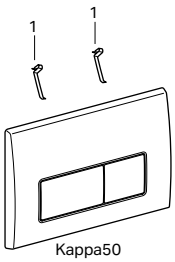

Kappa50

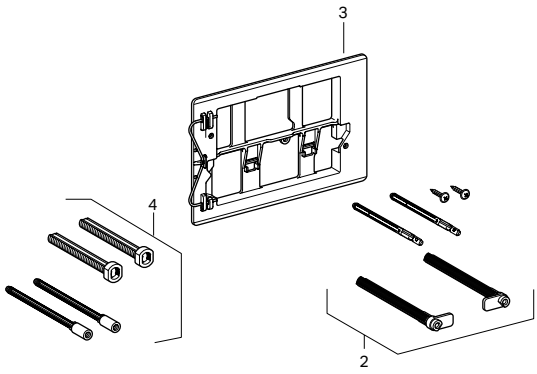

Complete Units

Style	Material	Finish	Model No.	List Price $
Kappa20	Plastic	Alpine White	115.228.11.1	130.00
		Polished Chrome	115.228.21.1	177.00
		Matte Chrome	115.228.46.1	177.00
Kappa50	Stainless	Brushed Stainless Steel	115.258.00.1	313.00
Kappa50	Zinc	Alpine White	115.260.11.1	313.00
		Polished Chrome	115.260.21.1	313.00
		Matte Chrome	115.260.46.1	313.00

Cover Plates for Kappa Concealed Tank Pre-wall, 2x6 Installation for use with Flush Buttons

Plastic	Alpine White	115.680.11.1	116.00
	Polished Chrome	115.680.21.1	155.00

Products marked with comply with the American Disabilities Act (ADA) when installed per the requirements of the latest ADA Accessibility Guidelines (ADAAG) and/or ICC/ANSI A117.1.

The information contained in this document is subject to change without notice.

Inactive Geberit Duofix Carriers 110.816, 110.826 and 111.816

115.151 115.222 115.888 115.398

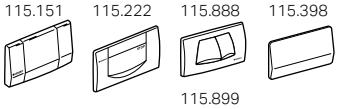

115.899



Item				Model No.	Description	List Price $
		1		240.513.00.1	Mounting frame for Twinline dual flush	17.00
1	1		1	240.068.00.1	Mounting Frame for Highline	14.00
1.1	1.1			240.066.00.1	Stop-and-go lever for Highline and 200F	9.00
		1.1		240.514.00.1	Push rod locking piece for Twinline	6.00
2	2		2	241.877.00.1	Screw for Twist, Tango, Mambo set-2	56.00
3	3	3	3	813.514.00.1	Spring for actuator plate	4.00
4	4	4	4	240.058.00.1	Extension set for actuator flush plates	27.00
5	5		5	216.024.00.1	Threaded bolt (one pair) set	18.00
6	6	6	6	240.067.00.1	Actuator bolt	4.00
7	7	7		240.074.00.1	Actuator rod for Twinline, 200F, Highline	4.00
		8		115.899.KJ.1	White-Polished Chrome	92.00
		8		115.899.KH.1	Polished Chrome-Matte Chrome	162.00
		8		115.899.JQ.1	Matte Chrome-Polished Chrome	190.00
9				115.151.00.1	Actuator plate, Highline single flush, Brushed Stainless Steel	449.00
	10			115.222.11.1	Actuator plate, 200F single flush, Alpine White	93.00
	10			115.222.21.1	Actuator plate, 200F single flush, Bright Chrome	164.00
	10			115.222.46.1	Actuator plate, 200F single flush, Matte Chrome	164.00
			11	115.398.00.1	Cover plate Twinline dual flush, Brushed Stainless Steel	191.00
12	12	12	12	240.114.00.1	Flush valve universal S/G C/C	42.00
12.1	12.1	12.1	12.1	816.418.00.1	Geberit flat gasket for flush valve (set of 10)	4.00
13	13	13	13	241.469.00.1	Filling valve Type 380 for Sigma, Omega and Kappa Concealed Tanks	32.00
13.1	13.1	13.1	13.1	240.771.00.1	Seal kit for filling valve Type 380	12.00

115.151 (Highline), 115.222 (200F), 115.398 (Twinline Coverplate)

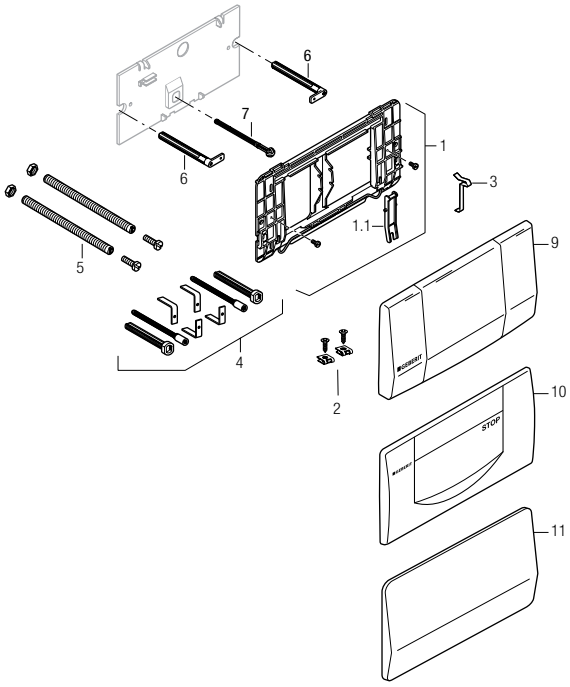

115.888 (Twinline Dual Flush), 115.899 (Twinline30)

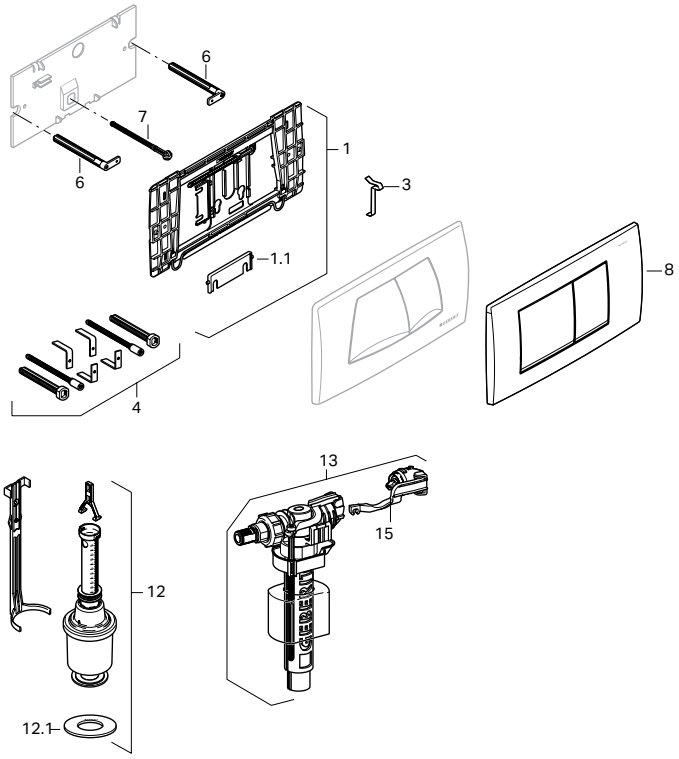

Products marked with comply with the American Disabilities Act (ADA) when installed per the requirements of the latest ADA Accessibility Guidelines (ADAAG) and/or ICC/ANSI A117.1.

The information contained in this document is subject to change without notice.

Replacement Parts

Inactive Geberit Duofix Carriers 110.816, 110.826 and 111.816

115.333 115.394



Item		Model No.	Description	List Price $
1	1	813.514.00.1	Spring for actuator plate	4.00
2		240.322.00.1	Mounting frame	27.00
	2	240.041.00.1	Conversion set	49.00
	2.1	889.110.11.1	Rocker lever	10.00
3		240.180.00.1	Extension set for actuator plates 115.333/115.395 for finished wall from 3.50"-7.00" (9-18cm)	20.00
	3	240.087.00.1	Extension set for actuator plate 115.392/115.394	20.00
4		240.323.00.1	Actuator rod for 300T/115.392/115.394	14.00
5		115.333.11.1	300T Style, Alpine White	93.00
	6	115.394.11.1	Topline Style, Alpine White	197.00
7	7	240.113.00.1	Flush valve universal S/G E/C	45.00
7.1	7.1	816.418.00.1	Geberit flat gasket for flush valve (set of 10)	4.00
8	8	241.469.00.1	Filling valve Type 380 for Sigma, Omega and Kappa Concealed Tanks	32.00
8.1	8.1	240.771.00.1	Seal kit for filling valve Type 380	12.00

115.333 (300T)

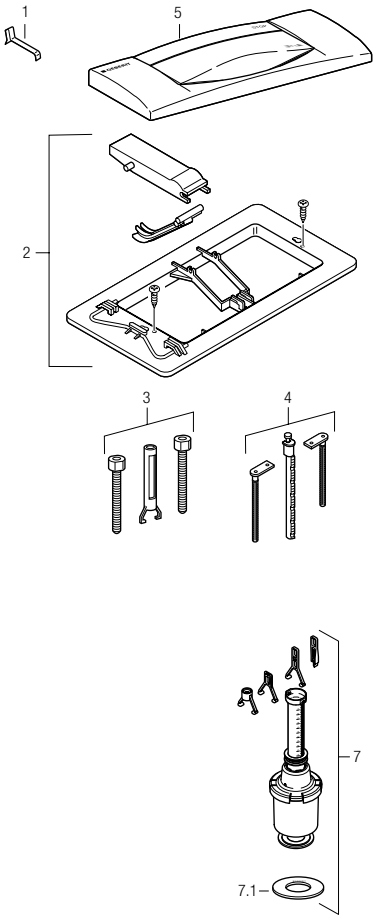

115.394 (Topline)

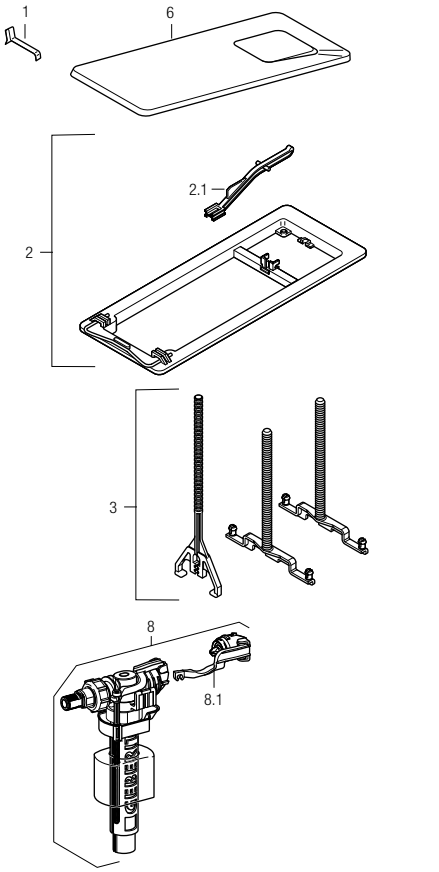

The information contained in this document is subject to change without notice.

Products marked with comply with the American Disabilities Act (ADA) when installed per the requirements of the latest ADA Accessibility Guidelines (ADAAG) and/or ICC/ANSI A117.1.

Geberit Type 50, Type 30, Type 10, Bolero and Mambo Urinal Actuators

116.015 116.017 116.016 116.012 116.013

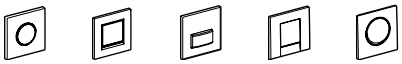

Actuator Dimensions: 5.12" x 5.12" (13 cm x 13 cm)

Item					Model No.	Description	List Price $
1				1	241.915.SN.1	Actuator plate Type 10/Mambo, Brushed Stainless Steel	217.00
	1				243.270.KH.1	Actuator plate Type 30, Polished Chrome-Matte Chrome-Polished Chrome	83.00
	1				243.270.KJ.1	Actuator plate Type 30, White-Polished Chrome-White	83.00
		1			242.764.11.1	Actuator plate Type 50, Alpine White	312.00
		1			242.764.GH.1	Actuator plate Type 50, Brushed Chrome	454.00
		1			242.764.JK.1	Remote flush actuation Type 50, Lava Glass	312.00
		1			242.764.JL.1	Remote flush actuation Type 50, Grey Sand Glass	312.00
		1			242.764.00.1	Actuator plate Type 50, Custom	312.00
2	2	2	2	2	241.934.00.1	Stop valve with throttle, complete	88.00
2.1	2.1	2.1	2.1	2.1	241.933.00.1	Regulating screw	30.00
3	3	3	3	3	241.937.00.1	Pneumatic actuator with mounting frame	72.00
4	4	4	4	4	241.931.00.1	Distance bolts, set	5.00
5	5	5	5	5	241.935.00.1	Pneumatic valve	166.00
5.1	5.1	5.1	5.1	5.1	241.932.00.1	Basket filter	5.00
5.2	5.2	5.2	5.2	5.2	241.936.00.1	Nozzle set, White	22.00
5.3	5.3	5.3	5.3	5.3	243.327.00.1	Flushing Volume Control 4 GPM (14 LPM)	15.00
6	6	6	6	6	241.947.00.1	Insulation protection with connection terminal	6.00
7	7	7	7	7	242.156.00.1	Lip seal flushing pipe	5.00
8	8	8	8	8	242.484.00.1	Flow limiter for UR-controls	9.00

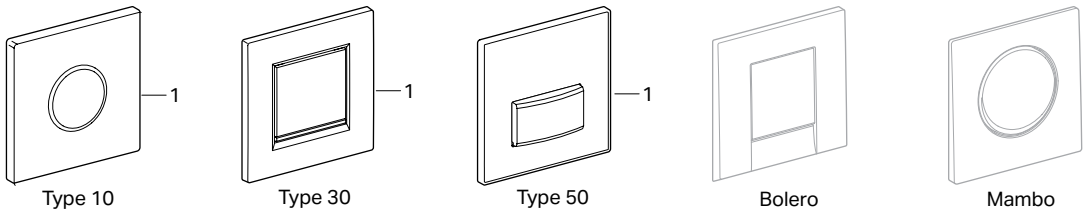

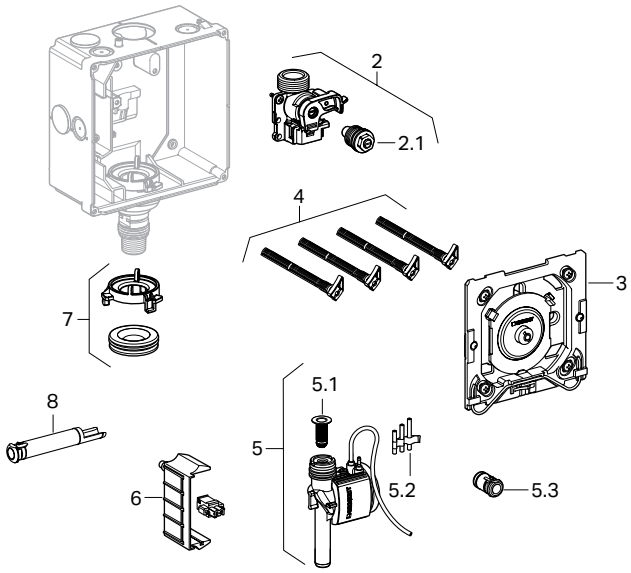

Products marked with comply with the American Disabilities Act (ADA) when installed per the requirements of the latest ADA Accessibility Guidelines (ADAAG) and/or ICC/ANSI A117.1.

The information contained in this document is subject to change without notice.

GEBERIT INSTALLATION SYSTEMS

Replacement Parts

Geberit Hands-Free Type 10 and Mambo Urinal Actuator

116.035	116.025	116.033	116.023	116.036	116.026	116.028	116.038	Actuator Dimensions: 5.12" x 5.12" (13 cm x 13 cm)

Item								Model No.	Description	List Price $
1	1	1	1	1	1	1	1	241.934.00.1	Stop valve with throttle, complete	88.00
1.1	1.1	1.1	1.1	1.1	1.1	1.1	1.1	241.933.00.1	Regulating screw	30.00
2	2	2	2	2	2	2	2	241.931.00.1	Distance bolts, set	5.00
3	3	3	3	3	3	3	3	241.941.00.1	Sensor electronics	347.00
4.1		4.1		4.1			4.1	241.945.00.1	Battery housing for UR-control	20.00
	4.2		4.2		4.2	4.2		241.944.00.1	Transformer for UR-control	77.00
4.3		4.3						—	2x "AA" alkaline batteries	—
5	5	5	5	5	5	5	5	241.943.00.1	Mounting frame for horizontal fixation	23.00
6	6	6	6					241.925.SN.1	Cover plate for UR-control Sigma10	208.00
6.1	6.1							241.905.00.1	IR window UR-control Sigma10	23.00
		6.2	6.2					241.903.00.1	Mambo only	27.00
7	7	7	7	7	7	7	7	241.947.00.1	Insulation protection with connection terminal	6.00
8	8	8	8	8	8	8	8	241.946.00.1	Solenoid valve for UR-control	158.00
8.1	8.1	8.1	8.1	8.1	8.1	8.1	8.1	241.932.00.1	Basket filter	5.00
8.3	8.3	8.3	8.3	8.3	8.3			243.327.00.1	Flushing Volume Control 4 GPM (14 LPM)	15.00
9	9	9	9	9	9			242.484.00.1	Flow limiter for UR-controls	9.00
10	10	10	10	10	10	10	10	242.156.00.1	Lip seal flushing pipe	5.00
				11	11			241.926.GH.1	Geberit cover plate Type 50: Chrome-Brushed	208.00
				11	11			241.926.QB.1	Geberit cover plate Type 50: Red Gold-Brushed	549.00
				11	11			241.926.QD.1	Geberit cover plate Type 50: Black Chrome-Brushed	549.00
				11	11			241.926.QF.1	Geberit cover plate Type 50: Brass-Brushed	549.00
				11.1	11.1			241.906.00.1	IR window UR-control Type 50	31.00
						12	12	243.579.00.1	Flushing Volume Control 2.4 GPM (4.5 LPM)	15.00

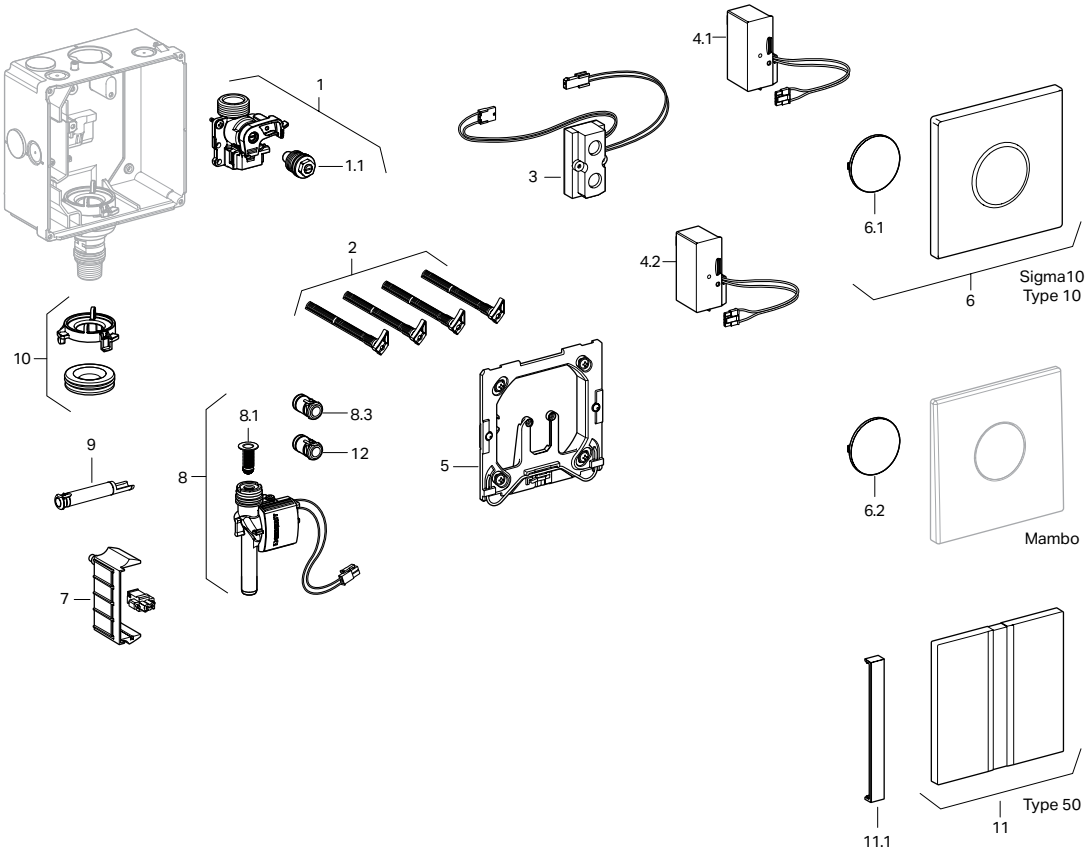

Products marked with comply with the American Disabilities Act (ADA) when installed per the requirements of the latest ADA Accessibility Guidelines (ADAAG) and/or ICC/ANSI A117.1.

The information contained in this document is subject to change without notice.



The information contained in this document is subject to change without notice.

GEBERIT FLUSHING SYSTEMS

Replacement Parts

Geberit Filling Valves Type 380, 360, 34x and 330

Type 380	Type 360	Type 34x	Type 330			
Item				**Model No.**	**Description**	**List Price $**
1				240.700.00.1	Filling valve Type 380 for exposed tanks (replacement)	36.00
2				241.469.00.1	Filling valve Type 380 for concealed tanks	32.00
3				241.470.00.1	Filling valve Type 380 for tanks w/refill (replacement)	38.00
4				240.771.00.1	Seal kit for filling valve Type 380	12.00
	5			271.227.00.1	Filling valve Type 360 15/16" UNF w/o refill for exposed tanks (replacement)	63.00
	6			241.813.00.1	Seal kit for filling valve Type 360	12.00
		7		225.170.00.1	Set of seals for fill valve Type 34x	12.00
			8	238.069.00.1	Diaphragm membrane for fill valve Type 330	12.00
	9			271.200.00.1	Filling valve Type 360 15/16" UNF w/ refill for exposed tanks (replacement)	60.00

Filling Valve Type 380

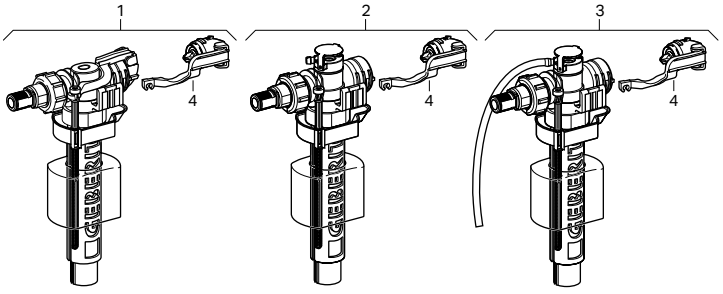

Filling Valve Type 360

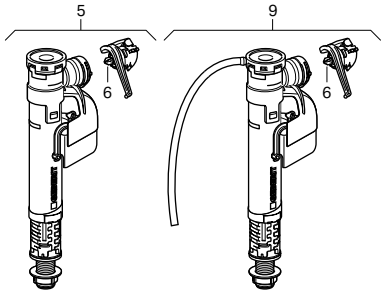

Filling Valve Type 34x

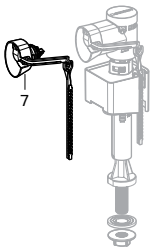

Filling Valve Type 330

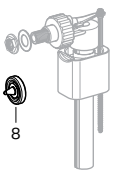

The information contained in this document is subject to change without notice.

GEBERIT FLUSHING SYSTEMS

Replacement Parts

Geberit Flushing Valves Type 290, 280 and Type 250

Type 290 Dual-flush	Type 290 Single-flush	Type 280 Dual-flush	Type 280 Single-flush	Type 250† Dual-flush	Model No.	Description	List Price $
Item							
1	1	1	1	1	816.418.00.1	Geberit flat gasket for flush valve (set of 10)	4.00
2	2	2			813.812.00.1	Gasket	12.00
		3			241.800.KD.1	Flushing valve Type 280 actuator button, dual-flush	20.00
			4		241.820.21.1	Flushing valve Type 280 actuator button, single-flush	20.00
5	5	5	5		217.869.00.1	Hardware kit	9.00
6					282.350.21.2	Flushing valve Type 290, dual-flush	87.00
6.1	6.1	6.1	6.1	6.1	243.320.00.1	Flushing Valve Type 290, dual-flush	28.00
6.2	6.2	6.2	6.2	6.2	243.321.00.1	Flushing Valve Type 290, dual-flush, L=3 inches	28.00
6.3	6.3	6.3	6.3	6.3	243.430.00.1	Flushing Valve Type 290, dual-flush, L=18 inches	28.00
	7				282.050.21.2	Flushing valve Type 290, single-flush	68.00
8					243.318.21.1	Dual-flush actuator for flush valve Type 290	15.00
	9				243.319.21.1	Single-flush actuator for flush valve Type 290	13.00

Note: Type 50 formerly called Impuls and Twico.

† For Flushing valve Type 250, the only spare part available is item #1. If other parts are needed, a complete Flushing valve Type 290 (item #6) must be ordered.

Flushing Valve Type 290 Dual-flush

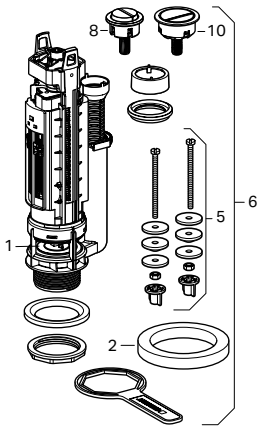

Flushing Valve Type 290 Dual-flush

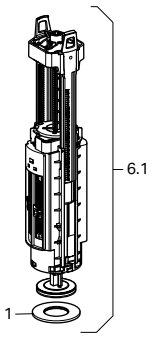

Flushing Valve Type 290 Dual-flush

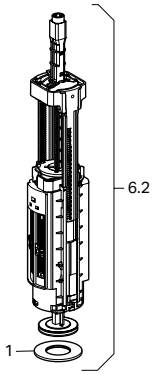

Flushing Valve Type 290 Dual-flush

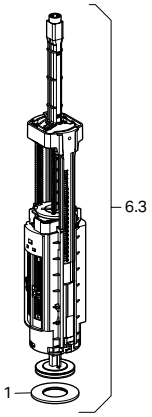

Flushing Valve Type 290 Single-flush

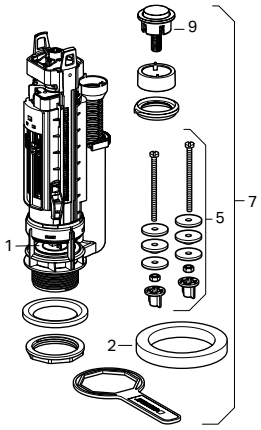

Flushing Valve Type 280 Dual-flush

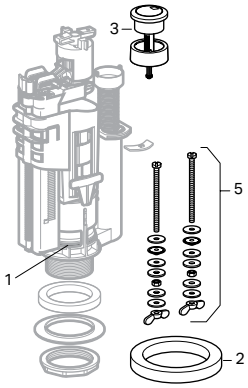

Flushing Valve Type 280 Single-flush

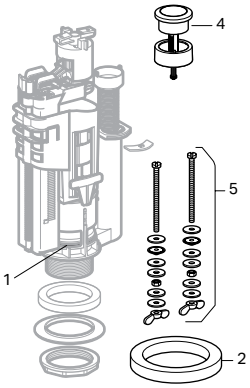

Flushing Valve Type 250† Dual-flush

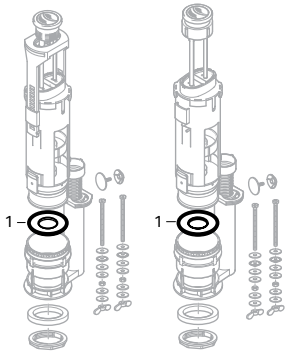

The information contained in this document is subject to change without notice.

GEBERIT BATH WASTE AND TRAP SYSTEMS

Replacement Parts

Replacement Parts and Kits (See page 37 for Item drawings)

Item	Description		Model No.	List Price $
1	TurnControl Overflow/Drain Service Kit		242.767.00.1	31.00
2	Brass Tee Assembly		—	—
3	Chicago Code Brass Tee Assembly		241.766.00.1	59.00
4	PushControl Overflow/Drain Service Kit		242.768.00.1	19.00
5	PushControl Trim Service Kits			
	Metal	Polished Chrome	241.726.21.1	125.00
		ForeverShine™ PVD Brushed Nickel	241.726.ID.1	181.00
	Plastic	Polished Chrome	241.725.21.1	80.00
6	Cascading Tub Filler Service Kit		242.769.00.1	19.00
7	Cascading Tub Filler Trim Service Kits			
	Metal	Polished Chrome	242.776.00.1	46.00
7.1	Stream Former Kit		—	—
8	Vacuum Breaker WATTS Model No. LF288AC		—	—
9	See TurnControl Traditional Metal Handles table below			
10	See TurnControl Traditional Plastic Handles table in next column			
11	See Plunger Assemblies table in next column			
12	TurnControl Handle/Plunger Service Kit		242.777.00.1	20.00

TurnControl Metal Handles (See page 37 for Item drawings)

Finish	Item No. 9 Traditional Model No.	List Price $
Polished Chrome	240.702.21.1	68.00
Hard Coat Oil Rubbed Bronze	240.702.HM.1	125.00
ForeverShine™ PVD Polished Nickel	240.702.IB.1	106.00
ForeverShine™ PVD Brushed Nickel	240.702.ID.1	106.00

TurnControl Plastic Handles (See page 37 for Item drawings)

Finish	Item No. 10 Traditional Model No.	List Price $
Alpine White	241.628.11.1	45.00
Polished Chrome	241.628.21.1	46.00
Bone	241.628.AA.1	46.00
White	241.628.DY.1	46.00
Biscuit	241.628.FF.1	46.00

Plunger Assemblies (See page 37 for Item drawings)

Item	Description		Model No.	List Price $
11	Metal	Polished Chrome	241.728.21.1	35.00
		Hard Coat Oil Rubbed Bronze	241.728.HM.1	63.00
		ForeverShine™ PVD Polished Nickel	241.728.IB.1	46.00
		ForeverShine™ PVD Brushed Nickel	241.728.ID.1	45.00
	Plastic	Alpine White	241.727.11.1	29.00
		Polished Chrome	241.727.21.1	35.00
		Bone	241.727.AA.1	30.00
		White	241.727.DY.1	30.00
		Biscuit	241.727.FF.1	30.00

Note: ForeverShine™ finishes ensure the quality and look of your Geberit BWO will last a lifetime. Geberit offers a limited lifetime warranty on ForeverShine™ products installed in residential applications.

The information contained in this document is subject to change without notice.

Tubular Plastic

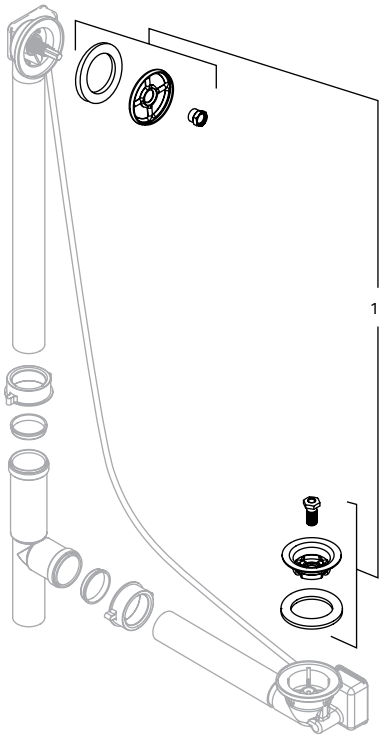

ABS/PVC

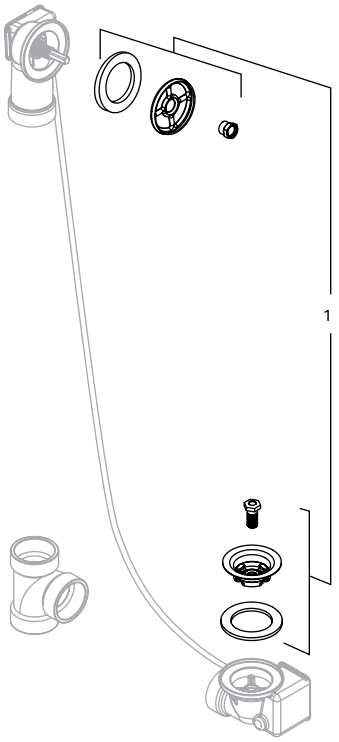

Tubular Brass

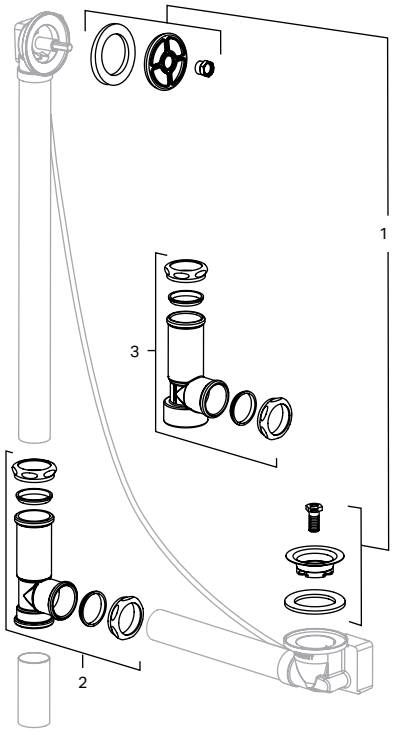

PushControl

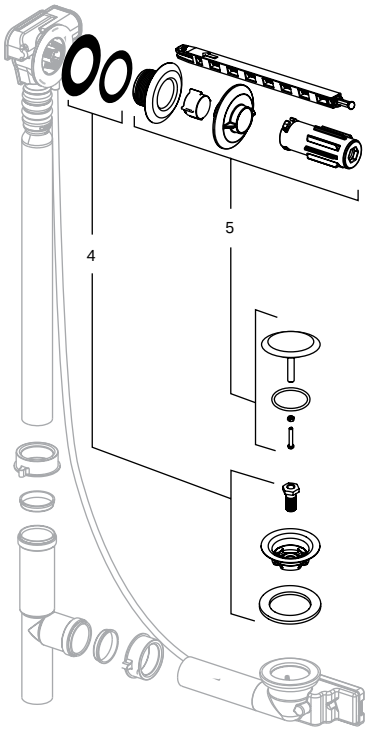

Cascading Tub Filler

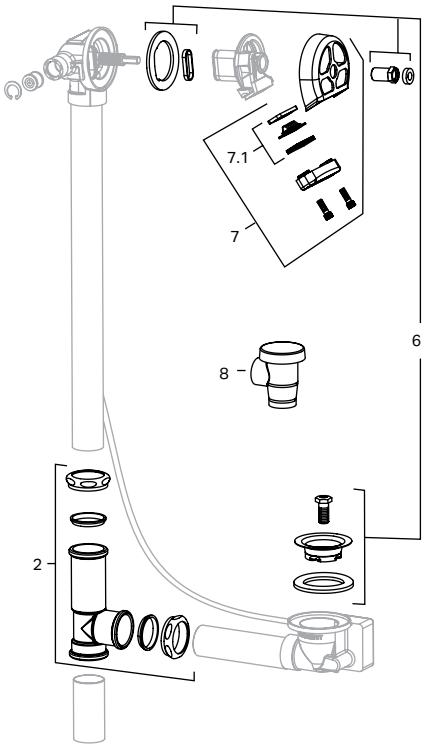

TurnControl Handle Parts

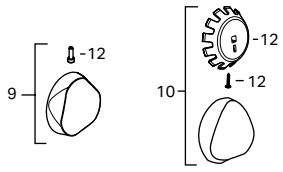

Plungers Parts

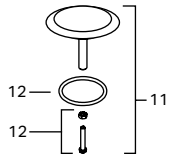

Replacement Parts Kit

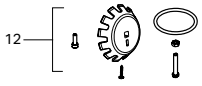

The information contained in this document is subject to change without notice.

GEBERIT PARTS CATALOG

Index

Model No.	List Price $	Page
109.304.00.5	442.00	18
109.307.00.5	442.00	18
109.797.00.1	576.00	22
111.012.00.1	655.00	14
111.013.00.1	27.00	27
111.018.00.1	655.00	14
111.064.00.1	74.00	27
111.335.00.5	622.00	6
111.490.00.1	323.00	16
111.520.00.1	516.00	16
111.524.00.1	516.00	16
111.597.00.1	760.00	10
111.625.00.1	666.00	15
111.798.00.1	760.00	10
111.815.00.1	39.00	27
111.835.00.1	39.00	27
111.847.00.1	54.00	27
111.863.00.1	586.00	27
111.868.00.1	128.00	27
111.869.00.1	39.00	27
111.887.00.1	17.00	27
111.892.00.1	7.00	40, 41, 42, 43, 44, 45, 46, 47
111.902.00.5	622.00	6
115.080.JQ.1	308.00	14
115.080.KH.1	308.00	14
115.080.KJ.1	227.00	14
115.080.KK.1	250.00	14
115.080.KM.1	250.00	14
115.081.GH.1	897.00	14
115.081.JK.1	897.00	14
115.081.JL.1	897.00	14
115.081.SI.1	897.00	14
115.081.SJ.1	897.00	14
115.082.00.1	243.00	14
115.082.SI.1	212.00	14
115.084.FW.1	923.00	14
115.084.JK.1	785.00	14
115.084.JL.1	785.00	14
115.084.SI.1	785.00	14
115.084.SJ.1	785.00	14
115.085.JQ.1	308.00	14
115.085.KH.1	308.00	14
115.085.KJ.1	227.00	14
115.085.KK.1	250.00	14
115.085.KM.1	250.00	14
115.086.21.1	197.00	14
115.086.GH.1	197.00	14
115.087.00.1	243.00	14
115.088.00.1	306.00	14
115.151.00.1	449.00	65
115.222.11.1	93.00	65
115.222.21.1	164.00	65
115.222.46.1	164.00	65
115.228.11.1	130.00	64
115.228.21.1	177.00	64
115.228.46.1	177.00	64
115.258.00.1	313.00	64
115.260.11.1	313.00	64
115.260.21.1	313.00	64
115.260.46.1	313.00	64
115.333.11.1	93.00	66
115.394.11.1	197.00	66
115.398.00.1	191.00	65
115.620.00.1	619.00	7, 19
115.620.FW.1	820.00	7, 19
115.620.JK.1	724.00	7, 19
115.620.JL.1	724.00	7, 19
115.620.SI.1	724.00	7, 19
115.620.SJ.1	724.00	7, 19
115.625.00.1	619.00	11, 23
115.625.FW.1	820.00	11, 23
115.625.JK.1	724.00	11
115.625.JL.1	724.00	11
115.625.SI.1	724.00	11, 23
115.625.SJ.1	724.00	11, 23
115.630.FW.1	923.00	8, 20
115.630.JK.1	785.00	8, 20
115.630.JL.1	785.00	8, 20
115.630.SI.1	785.00	8, 20
115.630.SJ.1	785.00	8, 20
115.635.FW.1	923.00	12, 24
115.635.JK.1	785.00	12, 24
115.635.JL.1	785.00	12, 24
115.635.SI.1	785.00	12, 24
115.635.SJ.1	785.00	12, 24
115.640.GH.1	731.00	7, 11, 19, 23
115.640.JK.1	731.00	7, 11, 19, 23
115.640.JL.1	731.00	7, 11, 19, 23
115.640.SI.1	731.00	7, 11, 19, 23
115.640.SJ.1	731.00	7, 11, 19, 23
115.641.21.1	197.00	7, 11, 19, 23
115.641.GH.1	197.00	7, 11, 19, 23
115.650.00.1	724.00	6, 10, 18, 22
115.650.JM.1	905.00	6, 10, 18, 22
115.650.JV.1	905.00	6, 10, 18, 22
115.650.JX.1	1234.00	6, 10, 18, 22
115.650.SI.1	795.00	6, 10, 18, 22
115.650.SJ.1	795.00	6, 10, 18, 22
115.651.00.1	724.00	6, 10, 18, 22
115.651.JM.1	905.00	6, 10, 18, 22
115.651.JV.1	905.00	6, 10, 18, 22
115.651.JX.1	1234.00	6, 10, 18, 22
115.651.SI.1	795.00	6, 10, 18, 22
115.651.SJ.1	795.00	6, 10, 18, 22
115.652.00.1	724.00	6, 10, 18, 22
115.652.JM.1	905.00	6, 10, 18, 22
115.652.JV.1	905.00	6, 10, 18, 22
115.652.JX.1	1234.00	6, 10, 18, 22
115.652.SI.1	795.00	6, 10, 18, 22
115.652.SJ.1	795.00	6, 10, 18, 22
115.670.00.2	724.00	6, 10, 19, 22
115.670.11.2	724.00	6, 10, 19, 22
115.670.DW.2	724.00	6, 10, 19, 22
115.670.JM.2	905.00	6, 10, 19, 22
115.670.JV.2	905.00	6, 10, 19, 22
115.670.JX.2	1234.00	6, 10, 19, 22
115.671.00.2	724.00	6, 10, 19, 22
115.671.11.2	724.00	6, 10, 19, 22
115.671.DW.2	724.00	6, 10, 19, 22
115.671.JM.2	905.00	6, 10, 19, 22
115.671.JV.2	905.00	6, 10, 19, 22
115.671.JX.2	1234.00	6, 10, 19, 22
115.672.00.2	724.00	7, 11, 19, 23
115.672.11.2	724.00	7, 11, 19, 23
115.672.DW.2	724.00	7, 11, 19, 23
115.672.JM.2	905.00	7, 11, 19, 23
115.672.JV.2	905.00	7, 11, 19, 23
115.672.JX.2	1234.00	7, 11, 19, 23
115.680.11.1	116.00	64
115.680.21.1	155.00	64
115.696.00.1	243.00	8, 12, 20, 24
115.697.00.1	306.00	8, 12, 20, 24
115.758.14.5	409.00	7, 11, 19, 23
115.758.JQ.5	219.00	7, 11, 19, 23
115.758.JT.5	409.00	7, 11, 19, 23
115.758.KH.5	219.00	7, 11, 19, 23
115.758.KJ.5	153.00	7, 11, 19, 23
115.758.KK.5	435.00	7, 11, 19, 23
115.758.KM.5	187.00	7, 11, 19, 23
115.758.SN.5	299.00	7, 11, 19, 23
115.761.00.4	552.00	6, 10, 18, 22
115.761.00.5	552.00	6, 10, 18, 22
115.761.00.6	552.00	6, 10, 18, 22
115.761.00.7	552.00	6, 10, 18, 22
115.764.FW.1	194.00	8, 12, 20, 24
115.766.00.1	194.00	8, 12, 20, 24
115.766.SI.1	243.00	8, 12, 20, 24
115.768.11.1	85.00	8, 12, 20, 24
115.768.21.1	111.00	8, 12, 20, 24
115.768.46.1	111.00	8, 12, 20, 24
115.770.11.5	104.00	6, 10, 18, 22
115.770.21.5	143.00	6, 10, 18, 22
115.770.DT.5	456.00	6, 10, 18, 22
115.770.DW.5	126.00	6, 10, 18, 22
115.770.JQ.5	143.00	6, 10, 18, 22
115.787.SN.5	339.00	7, 11, 19, 23
115.788.00.2	434.00	7, 11, 19, 23
115.788.11.2	434.00	7, 11, 19, 23
115.788.21.2	558.00	7, 11, 19, 23
115.788.DW.2	434.00	7, 11, 19, 23
115.788.GH.2	558.00	7, 11, 19, 23
115.788.JK.2	558.00	7, 11, 19, 23
115.788.JL.2	558.00	7, 11, 19, 23
115.788.JM.2	558.00	7, 11, 19, 23
115.788.JV.2	552.00	7, 11, 19, 23
115.788.JX.2	867.00	7, 11, 19, 23
115.788.SD.2	558.00	7, 11, 19, 23
115.796.GH.1	289.00	52
115.856.SN.1	1025.00	11, 23
115.860.00.1	411.00	7, 11, 15, 19, 23
115.861.00.1	175.00	7, 11, 19, 23, 55
115.882.01.1	261.00	6, 10, 18, 22
115.882.11.1	152.00	6, 10, 18, 22
115.882.14.1	261.00	6, 10, 18, 22
115.882.16.1	261.00	6, 10, 18, 22
115.882.DW.1	187.00	6, 10, 18, 22
115.882.ID.1	294.00	6, 10, 18, 22
115.882.JQ.1	284.00	6, 10, 18, 22
115.882.JT.1	261.00	6, 10, 18, 22
115.882.KH.1	219.00	6, 10, 18, 22
115.882.KJ.1	152.00	6, 10, 18, 22
115.882.KK.1	422.00	6, 10, 18, 22
115.882.KM.1	187.00	6, 10, 18, 22
115.882.SN.1	295.00	6, 10, 18, 22
115.883.01.1	289.00	6, 10, 18, 22
115.883.11.1	176.00	6, 10, 18, 22
115.883.14.1	289.00	6, 10, 18, 22
115.883.16.1	289.00	6, 10, 18, 22
115.883.DW.1	198.00	6, 10, 18, 22
115.883.JQ.1	302.00	6, 10, 18, 22
115.883.JT.1	289.00	6, 10, 18, 22
115.883.KH.1	246.00	6, 10, 18, 22
115.883.KJ.1	154.00	6, 10, 18, 22
115.883.KK.1	198.00	6, 10, 18, 22
115.883.KM.1	198.00	6, 10, 18, 22
115.884.00.1	434.00	6, 10, 18, 22
115.884.JK.1	558.00	6, 10, 18, 22
115.884.JL.1	558.00	6, 10, 18, 22
115.884.JM.1	558.00	6, 10, 18, 22
115.884.JV.1	552.00	6, 10, 18, 22
115.884.JX.1	867.00	6, 10, 18, 22
115.884.SI.1	558.00	6, 10, 18, 22
115.884.SJ.1	558.00	6, 10, 18, 22
115.889.ID.1	343.00	6, 10, 18, 22
115.889.SN.1	343.00	6, 10, 18, 22
115.890.SN.5	1025.00	7, 19
115.891.SN.5	1056.00	7, 19
115.893.14.1	390.00	7, 11, 19, 23
115.893.45.1	3157.00	7, 11, 19, 23
115.893.JT.1	390.00	7, 11, 19, 23
115.893.KJ.1	290.00	7, 11, 19, 23
115.893.KX.1	427.00	7, 11, 19, 23
115.893.KY.1	427.00	7, 11, 19, 23
115.899.JQ.1	190.00	65
115.899.KH.1	162.00	65
115.899.KJ.1	92.00	65
115.907.KH.1	836.00	7, 19
115.907.KJ.1	836.00	7, 19
115.907.KK.1	836.00	7, 19
115.907.KL.1	836.00	7, 19
115.907.KM.1	836.00	7, 19
115.907.KN.1	836.00	7, 19
115.907.SN.1	897.00	7, 19
115.908.KH.1	860.00	7, 19
115.908.KJ.1	860.00	7, 19
115.908.KK.1	860.00	7, 19
115.908.KL.1	860.00	7, 19
115.908.KM.1	860.00	7, 19
115.908.KN.1	860.00	7, 19
115.908.SN.1	922.00	7, 19
116.015.SN.1	434.00	15
116.016.00.5	635.00	15
116.016.11.5	635.00	15
116.016.DW.5	635.00	15
116.016.GH.5	880.00	15
116.016.JK.5	740.00	15
116.016.JL.5	740.00	15
116.017.KH.1	434.00	15
116.017.KJ.1	434.00	15
116.025.SN.1	1005.00	15
116.026.GH.1	1294.00	15
116.026.QB.1	1673.00	15
116.026.QD.1	1673.00	15
116.026.QF.1	1673.00	15
116.028.00.1	760.00	15
116.035.SN.1	1005.00	15
116.036.GH.1	1294.00	15
116.036.QB.1	1673.00	15

The information contained in this document is subject to change without notice.

Index (continued)

Model No.	List Price $	Page
116.036.QD.1	1673.00	15
116.036.QF.1	1673.00	15
116.038.00.1	760.00	15
116.040.11.1	119.00	8, 14, 20
116.040.21.1	139.00	8, 14, 20
116.041.11.1	119.00	12, 24
116.041.21.1	139.00	12, 24
116.042.11.1	139.00	8, 14, 20
116.042.21.1	181.00	8, 14, 20
116.043.11.1	139.00	12, 23
116.043.21.1	181.00	12, 24
116.044.11.1	139.00	8, 14, 20
116.045.11.1	139.00	12, 24
116.050.11.1	139.00	8, 14, 20
116.050.21.1	181.00	8, 14, 20
116.050.46.1	181.00	8, 14, 20
116.051.GH.1	313.00	8, 14, 20
116.051.KA.1	181.00	8, 14, 20
116.051.KV.1	181.00	8, 14, 20
116.052.21.1	181.00	8, 14, 20
116.053.GH.1	313.00	12, 24
116.053.KA.1	181.00	12, 24
116.053.KV.1	181.00	12, 24
116.054.21.1	181.00	12, 24
116.055.KH.1	198.00	8, 14, 20
116.055.KJ.1	181.00	8, 14, 20
116.055.KM.1	198.00	8, 14, 20
116.056.KH.1	198.00	12, 24
116.056.KJ.1	181.00	12, 24
116.056.KM.1	198.00	12, 24
116.057.KH.1	198.00	8, 14, 20
116.057.KJ.1	181.00	8, 14, 20
116.090.SG.1	1713.00	7, 19
116.090.SM.1	1713.00	7, 19
116.092.SG.1	1713.00	11, 23
116.092.SM.1	1713.00	11, 23
116.625.JK.1	724.00	23
116.625.JL.1	724.00	23
119.668.00.1	4.00	40, 41, 42, 43, 44, 48, 49
119.669.00.1	5.00	45
150.156.21.1	167.00	36
150.156.DY.1	174.00	36
150.156.FF.1	174.00	36
150.176.21.1	224.00	36
150.176.HM.1	292.00	36
150.176.IB.1	286.00	36
150.176.ID.1	286.00	36
150.183.00.1	128.00	36
150.184.00.1	143.00	36
151.116.11.1	57.00	38
151.117.11.1	57.00	38
151.118.11.1	57.00	38
151.450.00.1	417.00	36
151.460.00.1	417.00	36
151.466.21.1	1073.00	38
151.467.21.1	1073.00	38
151.468.21.1	1073.00	38
151.501.00.1	83.00	36
151.502.00.1	83.00	36
151.503.00.1	83.00	36
151.504.00.1	88.00	36
151.505.00.1	88.00	36
151.506.00.1	89.00	36
151.508.00.1	96.00	36
151.510.00.1	96.00	36
151.511.00.1	96.00	36
151.512.00.1	114.00	36
151.513.00.1	114.00	36
151.514.00.1	114.00	36
151.515.00.1	129.00	36
151.516.00.1	129.00	36
151.517.00.1	129.00	36
151.518.00.1	201.00	36
151.519.00.1	201.00	36
151.520.00.1	201.00	36
151.550.11.1	71.00	37
151.550.21.1	71.00	37
151.550.AA.1	77.00	37
151.550.DY.1	77.00	37
151.550.FF.1	77.00	37
151.551.21.1	116.00	37
151.551.HM.1	183.00	37
151.551.IB.1	178.00	37
151.551.ID.1	178.00	37
151.602.21.1	213.00	38
151.603.21.1	280.00	38
151.603.ID.1	350.00	38
151.604.21.1	230.00	38
151.605.21.1	301.00	38
151.605.ID.1	369.00	38
152.404.11.1	50.00	24, 40, 41, 42, 43, 44, 49
152.404.46.1	50.00	40, 41, 43, 44, 49
152.424.00.1	6.00	40, 41, 42, 43, 44, 49
152.438.46.1	63.00	26
152.489.16.1	32.00	45
152.647.00.1	128.00	28
152.682.00.1	4.00	46, 47
152.693.00.1	5.00	45
152.796.00.1	4.00	47
152.950.11.1	40.00	26, 45
152.951.11.1	40.00	26
156.050.00.1	21.00	26
216.024.00.1	18.00	65
216.179.00.1	5.00	41, 42
217.713.11.1	10.00	26
217.713.46.1	8.00	40, 41, 42, 43, 44, 46, 49
217.869.00.1	9.00	71
225.170.00.1	12.00	70
238.069.00.1	12.00	70
240.004.00.1	27.00	59, 60
240.027.46.1	8.00	45
240.041.00.1	49.00	66
240.058.00.1	27.00	65
240.066.00.1	9.00	65
240.067.00.1	4.00	65
240.068.00.1	14.00	65
240.074.00.1	4.00	65
240.087.00.1	20.00	66
240.113.00.1	45.00	66
240.114.00.1	42.00	65
240.172.00.1	27.00	44
240.180.00.1	20.00	66
240.189.00.1	6.00	40, 41, 42, 43, 44, 46
240.269.00.1	23.00	40, 43, 44, 49
240.298.00.1	18.00	40, 41, 42, 43, 44, 48, 49
240.306.00.1	4.00	46
240.315.00.1	27.00	45
240.322.00.1	27.00	66
240.323.00.1	14.00	66
240.347.00.1	6.00	40, 41, 42, 43, 44, 48, 49
240.513.00.1	17.00	65
240.514.00.1	6.00	65
240.533.00.1	17.00	44
240.571.11.1	61.00	59
240.571.KA.1	87.00	59
240.572.11.1	67.00	59
240.572.KA.1	109.00	59
240.573.00.1	27.00	56, 59, 60
240.574.00.1	33.00	56, 58, 59, 60
240.575.00.1	10.00	8, 12, 14, 20, 24, 56, 58, 59, 60
240.582.00.1	27.00	59
240.629.00.1	23.00	43, 44
240.637.00.1	39.00	44
240.638.00.1	29.00	44
240.639.00.1	9.00	64
240.646.00.1	15.00	64
240.691.00.1	36.00	37
240.698.00.1	43.00	50
240.700.00.1	36.00	70
240.702.21.1	68.00	72
240.702.HM.1	125.00	72
240.702.IB.1	106.00	72
240.702.ID.1	106.00	72
240.771.00.1	12.00	40, 41, 42, 43, 44, 48, 49, 65, 66, 70
240.794.00.1	7.00	60
240.839.00.1	72.00	27
240.847.00.1	34.00	41, 42, 48
240.851.00.1	15.00	40, 41, 42, 44, 48, 49
240.853.00.1	15.00	40, 44, 49
240.921.00.1	17.00	40, 49
240.922.00.1	5.00	40, 41, 42, 43, 44, 48, 49
240.923.00.1	7.00	40, 49
240.938.00.1	28.00	26, 50, 51, 61, 63, 64
241.009.00.1	10.00	47
241.059.00.1	20.00	47
241.066.00.1	20.00	46
241.067.16.1	17.00	46, 47
241.093.00.1	22.00	51, 61
241.149.00.1	152.00	54, 55
241.150.00.1	192.00	54, 55
241.161.00.1	15.00	54, 55
241.167.00.1	12.00	40, 41, 42, 43, 44, 48, 49
241.199.11.1	67.00	60
241.199.21.1	89.00	60
241.286.00.1	6.00	42
241.290.00.1	36.00	41, 42, 48
241.291.00.1	4.00	41, 42, 48
241.292.00.1	6.00	41, 42, 48
241.293.00.1	5.00	41, 42, 48
241.294.00.1	20.00	48
241.295.00.1	10.00	50, 64
241.302.00.1	19.00	54, 55
241.303.00.1	10.00	55
241.413.21.1	85.00	60
241.469.00.1	32.00	40, 41, 42, 43, 44, 48, 49, 65, 66, 70
241.470.00.1	38.00	70
241.476.00.1	454.00	55
241.478.00.1	38.00	55
241.628.11.1	45.00	72
241.628.21.1	46.00	72
241.628.AA.1	46.00	72
241.628.DY.1	46.00	72
241.628.FF.1	46.00	72
241.670.00.1	20.00	41, 42, 48
241.725.21.1	80.00	72
241.726.21.1	125.00	72
241.726.ID.1	181.00	72
241.727.11.1	29.00	72
241.727.21.1	35.00	72
241.727.AA.1	30.00	72
241.727.DY.1	30.00	72
241.727.FF.1	30.00	72
241.728.21.1	35.00	72
241.728.HM.1	63.00	72
241.728.IB.1	46.00	72
241.728.ID.1	45.00	72
241.729.00.1	40.00	38
241.766.00.1	59.00	72
241.769.00.1	53.00	37
241.771.00.1	53.00	37
241.772.00.1	53.00	37
241.773.00.1	53.00	37
241.774.00.1	53.00	37
241.775.00.1	53.00	37
241.789.21.1	35.00	37, 38
241.800.KD.1	20.00	71
241.803.00.1	17.00	47
241.805.00.1	17.00	47
241.813.00.1	12.00	70
241.820.21.1	20.00	71
241.826.00.1	15.00	26
241.829.00.1	10.00	40, 49
241.831.00.1	84.00	7, 11, 19, 23, 54, 55
241.854.00.1	25.00	49
241.857.00.1	6.00	40, 43, 44, 49
241.859.00.1	11.00	44
241.868.00.1	4.00	40, 43, 44, 49
241.873.00.1	37.00	50, 51, 61
241.874.00.1	15.00	50, 51, 53, 61
241.876.00.1	17.00	50, 51, 61
241.877.00.1	56.00	50, 51, 55, 61, 65
241.878.00.1	15.00	51
241.899.00.1	70.00	41, 42
241.903.00.1	27.00	68
241.905.00.1	23.00	68
241.906.00.1	31.00	68
241.915.SN.1	217.00	67
241.925.SN.1	208.00	15, 68
241.926.GH.1	208.00	15, 68

The information contained in this document is subject to change without notice.

Index (continued)

Model No.	List Price $	Page
241.926.QB.1	549.00	15, 68
241.926.QD.1	549.00	15, 68
241.926.QF.1	549.00	15, 68
241.930.00.1	22.00	26, 45
241.931.00.1	5.00	67, 68
241.932.00.1	5.00	67, 68
241.933.00.1	30.00	67, 68
241.934.00.1	88.00	67, 68
241.935.00.1	166.00	67
241.936.00.1	22.00	67
241.937.00.1	72.00	67
241.941.00.1	347.00	68
241.943.00.1	23.00	68
241.944.00.1	77.00	68
241.945.00.1	20.00	68
241.946.00.1	158.00	68
241.947.00.1	6.00	67, 68
242.012.00.1	7.00	40, 41, 42, 43, 44
242.039.00.1	76.00	45
242.042.00.1	121.00	27
242.045.00.1	17.00	45
242.046.00.1	12.00	45
242.047.00.1	30.00	45
242.131.00.1	66.00	45
242.156.00.1	5.00	67, 68
242.269.00.1	18.00	41, 42, 48
242.309.00.1	121.00	27
242.314.00.1	66.00	40, 41, 42, 43, 44
242.315.00.1	10.00	40, 49
242.316.00.1	12.00	44
242.380.21.1	146.00	60
242.398.KM.1	149.00	56
242.401.00.1	43.00	59, 60
242.413.00.1	53.00	42
242.414.00.1	19.00	41, 42, 48
242.415.00.1	27.00	42
242.417.00.1	15.00	42
242.418.00.1	10.00	41, 42, 48
242.424.00.1	218.00	54
242.425.00.1	126.00	55
242.484.00.1	9.00	67, 68
242.516.00.1	39.00	45
242.548.00.1	18.00	60
242.583.00.1	22.00	52
242.588.00.1	27.00	52, 62, 63
242.594.00.1	58.00	56, 58, 59
242.617.00.1	60.00	54
242.618.SG.1	1067.00	54
242.618.SM.1	1067.00	54
242.658.00.1	61.00	54
242.698.00.1	38.00	40, 49
242.764.00.1	312.00	67
242.764.11.1	312.00	67
242.764.GH.1	454.00	67
242.764.JK.1	312.00	67
242.764.JL.1	312.00	67
242.767.00.1	31.00	72
242.768.00.1	19.00	72
242.769.00.1	19.00	72
242.776.00.1	46.00	72
242.777.00.1	20.00	72
242.781.SN.1	312.00	55
242.782.KH.1	124.00	55
242.782.KJ.1	124.00	55
242.782.KK.1	217.00	55
242.782.KL.1	124.00	55
242.782.KM.1	124.00	55
242.782.KN.1	124.00	55
242.782.SN.1	259.00	55
242.813.00.1	208.00	53
242.813.FW.1	259.00	53
242.813.SI.1	218.00	53
242.813.SJ.1	218.00	53
242.814.00.1	38.00	53
242.819.00.1	23.00	53, 57
242.820.00.1	312.00	53, 57
242.822.00.1	12.00	53, 57
242.823.00.1	76.00	53, 57
242.824.00.1	55.00	53, 57
242.825.00.1	17.00	53, 57
242.826.00.1	17.00	53, 57
242.849.GH.1	199.00	58
242.849.KA.1	121.00	58
242.849.KV.1	121.00	58
242.870.00.1	180.00	55
242.871.00.1	45.00	55
242.886.00.1	14.00	40, 41, 43, 44
242.920.00.1	10.00	52, 52, 63
242.939.00.1	18.00	56, 57
242.949.00.1	65.00	57
242.956.00.1	201.00	57
242.957.FW.1	412.00	57
242.957.JK.1	302.00	57
242.957.JL.1	302.00	57
242.957.SI.1	302.00	57
242.957.SJ.1	302.00	57
242.958.00.1	129.00	57
242.961.11.1	31.00	56
242.961.21.1	31.00	56
242.962.11.1	18.00	56
242.962.21.1	31.00	56
242.962.46.1	31.00	56
242.963.KH.1	38.00	56
242.963.KJ.1	38.00	56
242.963.KM.1	38.00	56
242.964.KH.1	38.00	56
242.964.KJ.1	38.00	56
242.965.00.1	35.00	56
242.975.11.1	6.00	54, 55
243.084.00.1	65.00	53, 57
243.088.00.1	7.00	43
243.090.00.1	65.00	43
243.091.00.1	20.00	43
243.092.00.1	30.00	43
243.093.00.1	9.00	43
243.108.00.1	18.00	63
243.109.00.1	113.00	63
243.110.00.1	30.00	62, 63
243.118.GH.1	572.00	63
243.118.JK.1	511.00	63
243.118.JL.1	511.00	63
243.118.SI.1	511.00	63
243.118.SJ.1	511.00	63
243.130.00.1	27.00	56
243.168.00.1	18.00	7, 8, 11, 19, 20, 23, 40, 41, 42, 48, 49, 62
243.169.00.1	18.00	57
243.170.00.1	18.00	53, 57
243.171.00.1	18.00	53, 57
243.173.00.1	54.00	27
243.175.00.1	27.00	41, 48
243.270.KH.1	83.00	67
243.270.KJ.1	83.00	67
243.272.00.1	71.00	48
243.278.00.1	17.00	52
243.279.00.1	6.00	41, 48
243.294.00.1	17.00	63
243.297.00.1	10.00	8, 12, 14, 20, 24, 53, 57
243.299.00.1	61.00	62
243.301.00.1	24.00	62
243.302.00.1	35.00	62
243.303.00.1	57.00	62
243.304.00.1	61.00	62
243.306.21.1	154.00	62
243.307.21.1	117.00	62
243.318.21.1	15.00	71
243.319.21.1	13.00	71
243.320.00.1	28.00	71
243.321.00.1	28.00	71
243.327.00.1	15.00	67, 68
243.344.00.1	18.00	41, 48
243.345.00.1	18.00	40, 41, 42, 48, 49
243.347.00.1	18.00	53, 57
243.356.00.1	192.00	54, 55
243.357.00.1	35.00	41, 48
243.395.11.1	92.00	56
243.395.21.1	101.00	56
243.396.11.1	101.00	56
243.397.11.1	101.00	56
243.397.21.1	131.00	56
243.397.46.1	131.00	56
243.398.KH.1	149.00	56
243.398.KK.1	131.00	56
243.413.00.1	165.00	52
243.414.00.1	35.00	52
243.415.GH.1	657.00	52
243.415.JK.1	587.00	52
243.415.JL.1	587.00	52
243.415.SI.1	587.00	52
243.415.SJ.1	587.00	52
243.422.00.1	23.00	52
243.423.00.1	75.00	52
243.424.00.1	46.00	52
243.430.00.1	28.00	71
243.461.00.1	312.00	57
243.579.00.1	15.00	68
243.703.00.1	22.00	56
243.727.00.1	18.00	41
243.813.JK.1	218.00	53
243.813.JL.1	218.00	53
244.125.00.1	17.00	40, 41, 43, 44, 45, 46, 47
244.244.00.1	4.00	40, 43, 49
244.501.00.1	33.00	58
244.504.21.1	121.00	58
244.505.00.1	29.00	58
244.601.00.1	27.00	56
244.844.00.1	14.00	40, 43, 49
245.372.00.1	42.00	43
245.377.00.1	42.00	43
245.380.00.1	23.00	40, 49
245.400.00.1	23.00	40, 49
249.801.00.1	130.00	27, 42
256.000.00.1	9.00	8, 12, 14, 20, 24, 56, 59, 60
271.200.00.1	60.00	70
271.227.00.1	63.00	70
282.050.21.2	68.00	71
282.350.21.2	87.00	71
362.771.00.1	4.00	40, 41, 42, 43, 44, 48, 49
362.790.00.1	4.00	45
362.796.92.1	7.00	40, 41, 42, 43, 44, 48, 49
366.061.16.1	25.00	28, 40, 43, 44
366.820.92.1	5.00	40, 41, 42, 43, 44
366.887.16.1	39.00	28
366.913.16.1	83.00	28
366.914.16.1	83.00	28
367.072.18.1	251.00	28
367.485.16.1	170.00	28
367.923.16.1	166.00	28
387.282.00.1	6.00	40, 41, 42, 43, 44
405.116.00.1	252.00	26
465.034.00.2	42.00	27
813.514.00.1	4.00	50, 51, 52, 53, 63, 65, 66
813.812.00.1	12.00	71
816.418.00.1	4.00	40, 43, 44, 49, 65, 66, 71
853.614.92.1	6.00	45
880.328.11.1	7.00	59, 60
889.110.11.1	10.00	66
892.975.00.1	4.00	48
CR115-6SN1	1056.00	11, 23
CR115-7KH1	836.00	11, 23
CR115-7KJ1	836.00	11, 23
CR115-7KK1	836.00	11, 23
CR115-7KL1	836.00	11, 23
CR115-7KM1	836.00	11, 23
CR115-7KN1	836.00	11, 23
CR115-7SN1	897.00	11, 23
CR115-8KH1	860.00	11, 23
CR115-8KJ1	860.00	11, 23
CR115-8KK1	860.00	11, 23
CR115-8KL1	860.00	11, 23
CR115-8KM1	860.00	11, 23
CR115-8KN1	860.00	11, 23
CR115-8SN1	922.00	11, 23
M10 x 10"	—	26
M12 x 10"	—	26
M8 x 10"	—	26

The information contained in this document is subject to change without notice.



The information contained in this document is subject to change without notice.

Limited Warranty

LIMITED WARRANTY – The Company offers limited warranties regarding certain of its products. Such limited warranties can be found in the Company's catalogs and on its website at **geberit.us. THE COMPANY SHALL NOT BE LIABLE TO BUYER, OR TO ANYONE CLAIMING UNDER BUYER, FOR ANY OTHER OBLIGATIONS OR LIABILITIES, INCLUDING, BUT NOT LIMITED TO, OBLIGATIONS OR LIABILITIES ARISING OUT OF BREACH OF CONTRACT OR WARRANTY, NEGLIGENCE OR OTHER TORT OR ANY THEORY OF STRICT LIABILITY, WITH RESPECT TO THE PRODUCTS OR THE COMPANY'S ACTS OR OMISSIONS OR OTHERWISE. THE COMPANY AND BUYER AGREE THAT THE EXPRESS WARRANTIES DESCRIBED ABOVE ARE EXCLUSIVE AND IN LIEU OF ALL OTHER WARRANTIES. ALL OTHER EXPRESS WARRANTIES ARE DISCLAIMED. FOR COMMERCIAL PRODUCTS, ALL WARRANTIES IMPLIED BY LAW, INCLUDING WITHOUT LIMITATION THE IMPLIED WARRANTIES OF MERCHANTABILITY AND FITNESS FOR A PARTICULAR PURPOSE, ARE DISCLAIMED. FOR CONSUMER PRODUCTS, WARRANTIES IMPLIED BY LAW, INCLUDING THOSE OF MERCHANTABILITY AND FITNESS FOR A PARTICULAR PURPOSE, ARE EXPRESSLY LIMITED TO THE PERIOD OF THE EXPRESS LIMITED WARRANTY FOR THE RELEVANT PRODUCT.** Some States do not allow limitations on how long an implied warranty lasts, so the above limitation may not apply to Buyer. IN NO EVENT SHALL THE COMPANY BE LIABLE FOR INCIDENTAL, CONSEQUENTIAL, INDIRECT OR SPECIAL DAMAGES. THE COMPANY'S AGGREGATE LIABILITY WITH RESPECT TO A DEFECTIVE PRODUCT AND THIS CONTRACT SHALL BE LIMITED TO AN AMOUNT EQUAL TO THE MONIES PAID TO THE COMPANY FOR THAT DEFECTIVE PRODUCT. Some states do not allow the exclusion or limitation of incidental or consequential damages, so the above limitation or exclusion may not apply to Buyer. Please see the Company's limited warranty statement for details on limitations.

TO WHOM DOES THIS WARRANTY APPLY? – The Company extends the following limited warranty to the original user only.

WHAT DOES THIS WARRANTY COVER AND HOW LONG DOES IT LAST? This warranty covers the following Commercial Products:

BATH WASTE AND OVERFLOW PRODUCTS WARRANTY – Bath Waste and Overflow products are warranted against defects in material and workmanship for the life of the Products.

GEBERIT INSTALLATION SYSTEMS – Frame, Flushing Tanks, and Actuators for Geberit Installation Systems are warranted against defects in material and workmanship for the life of the Products. Filling and Flushing valves are warranted against defects in material and workmanship for 10 years from the date of Product purchase. The Company offers NO WARRANTY for Product batteries. Use of third party Actuators (and hardware), or Fill and Flush valves voids all Flushing Tank warranties.

FIVE YEAR FINISH WARRANTY – RESIDENTIAL – For Products used in residential applications, the finish of the Product is warranted against material manufacturing defects for a period of five (5) years from the date of Product purchase.

FOREVERSHINE™ and HARD COAT FINISHES WARRANTY – RESIDENTIAL – ForeverShine™ and Hard Coat finishes installed in residential-use applications are warranted not to corrode, tarnish or discolor for the life of the Product.

OTHER WARRANTIES – All other Products not covered above are warranted against material manufacturing defects for a period of one (1) year from the date of Product purchase.

WHAT THIS WARRANTY DOES NOT COVER – The Company will not be liable for any labor, transportation or consequential expenses not specifically stated above. There is **NO WARRANTY** in cases of damage in transit, negligence, abuse, abnormal usage, misuse, accidents, normal wear and tear, damage due to environmental or natural elements, failure to follow the Company's instructions, unauthorized repair, incorrectly performed maintenance or repair, improper installation or storage or use of acidic, abrasive cleaning materials. In order for this Warranty to apply, Buyer must retain and provide to the Company receipts showing date of Product purchase and documenting proper maintenance. Any oral or written description of the Products is for the sole purpose of identifying the Products and shall not be construed as an express warranty. **THE COMPANY SHALL NOT BE LIABLE TO BUYER, OR TO ANYONE CLAIMING UNDER BUYER, FOR ANY OTHER OBLIGATIONS OR LIABILITIES, INCLUDING, BUT NOT LIMITED TO, OBLIGATIONS OR LIABILITIES ARISING OUT OF BREACH OF CONTRACT OR WARRANTY, NEGLIGENCE OR OTHER TORT OR ANY THEORY OF STRICT LIABILITY, WITH RESPECT TO THE PRODUCTS OR THE COMPANY'S ACTS OR OMISSIONS OR OTHERWISE. THE COMPANY AND BUYER AGREE THAT THE EXPRESS WARRANTIES DESCRIBED ABOVE ARE EXCLUSIVE AND IN LIEU OF ALL OTHER WARRANTIES. ALL OTHER EXPRESS WARRANTIES ARE DISCLAIMED. FOR COMMERCIAL PRODUCTS, ALL WARRANTIES IMPLIED BY LAW, INCLUDING WITHOUT LIMITATION THE IMPLIED WARRANTIES OF MERCHANTABILITY AND FITNESS FOR A PARTICULAR PURPOSE, ARE DISCLAIMED. FOR CONSUMER PRODUCTS, WARRANTIES IMPLIED BY LAW, INCLUDING THOSE OF MERCHANTABILITY AND FITNESS FOR A PARTICULAR PURPOSE, ARE EXPRESSLY LIMITED TO THE PERIOD OF THE EXPRESS LIMITED WARRANTY STATED ABOVE FOR THE RELEVANT PRODUCT.** Some States do not allow limitations on how long an implied warranty lasts, so the above limitation may not apply to you. Any assistance the Company provides to or procures for Buyer outside the terms, limitations or exclusions of this warranty will not constitute a waiver of the terms, limitations or exclusions of this limited warranty, nor will such assistance extend or revive the warranty. The Company will not reimburse Buyer for any expenses incurred by Buyer in repairing, correcting or replacing any defective Products, except for expenses incurred with the Company's prior written permission.

HOW TO GET SERVICE – For complete warranty details, or to provide notice of a warranty claim or request warranty service, contact your Geberit Sales Representative or Geberit, Customer Service, 2100 S. Clearwater Drive, Des Plaines, Illinois 60018 or 847-803-5000. As the Company's sole and exclusive obligation under this warranty (and Buyer's sole and exclusive remedy), upon prompt written notice of breach from Buyer during the warranty period, the Company will either replace or repair the defective Product or refund the wholesale purchase price, at its option, if an inspection by the Company discloses defects in material or workmanship covered by this warranty. These warranty provisions do not cover the battery shipped with the electronic products.

LIMITATION ON DAMAGES – IN NO EVENT SHALL THE COMPANY BE LIABLE FOR INCIDENTAL, CONSEQUENTIAL, INDIRECT OR SPECIAL DAMAGES. WITHOUT LIMITING THE FOREGOING, THE COMPANY SHALL NOT BE LIABLE FOR ANY DAMAGE A PALM DEVICE OR ANY SOFTWARE OR RELATED EQUIPMENT ALLEGEDLY CAUSES TO A SYSTEM OR OTHERWISE. THE COMPANY'S AGGREGATE LIABILITY WITH RESPECT TO A DEFECTIVE PRODUCT AND THIS CONTRACT SHALL BE LIMITED TO AN AMOUNT EQUAL TO THE MONIES PAID TO THE COMPANY FOR THAT DEFECTIVE PRODUCT.

Some states do not allow the exclusion or limitation of incidental or consequential damages, so the above limitation or exclusion may not apply to you.

HOW DOES STATE LAW APPLY? – This warranty gives you specific legal rights, and you may also have other rights which vary from state to state.

Restrictions Apply

The information contained in this document is subject to change without notice.

Geberit
2100 S. Clearwater Drive
Des Plaines, IL 60018
USA

P 800-566-2100
F 847-849-1845

www.geberit.us

Geberit North America is part of the Geberit Group, a European market leader and global provider of sanitary technology. Located in Des Plaines, Illinois, Geberit North America provides concealed tank and carrier systems for wall-hung and floor-mounted toilets and fixtures. Geberit systems improve the look of any bathroom by hiding the unsightly toilet tank. Replacing a standard tank and toilet with the Geberit system results in more usable space, improved hygiene and better accessibility. The unique dual-flush valve saves water and is practically maintenance free. Geberit also offers cable-controlled bath waste and overflows in a variety of designer finishes. Critical working parts are outside the waterway, ensuring years of trouble-free operation.

For more information, contact your Geberit sales representative, call 800/566-2100 or go to **geberit.us**

© 2021 Geberit. Product information and specifications subject to change without notice.

© 2021 Geberit. GNA7089 09/21