LACAVA

PIAZZA

wall-mount, vanity-top, or drop-in sink

4272

Specifications:

Installation:	Wall-mount, vanity-top, or drop-in
Exterior Dimensions:	19 1/2”w x 17 1/2”d x 7 1/2”h
Material:	Porcelain
Weight:	40 lbs
Overflow:	Yes
Finishes:	001 - White
Faucet Holes:	00 - no hole 01 - one centered hole 02 - two hole - center and right, 4” spread 03 - three hole, 8” spread
Faucet Hole Size:	Ø 1 3/8”
Drain Hole Size:	Ø 1 3/4”
Cut-out Size Options:	Vanity-top: (template available upon request) Drop-in: 17 1/8” x 16 5/8” (template available upon request)



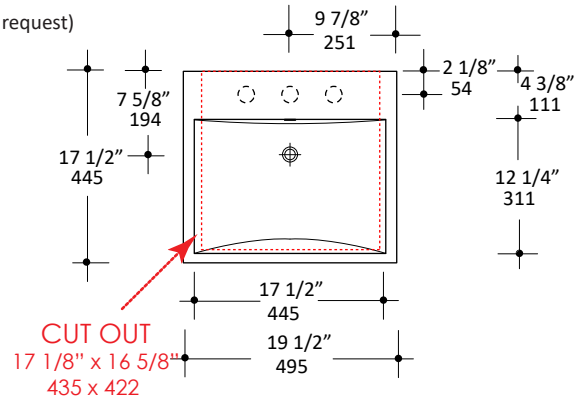

Features:

- Porcelain sink with overflow
- Unglazed back wall
- Wall-mounting bolts are included
- It must be installed against a wall on the back

Codes + Standards:

- Meets and exceeds applicable national codes and standards

ADA compliant when installed to specific requirements of this regulation

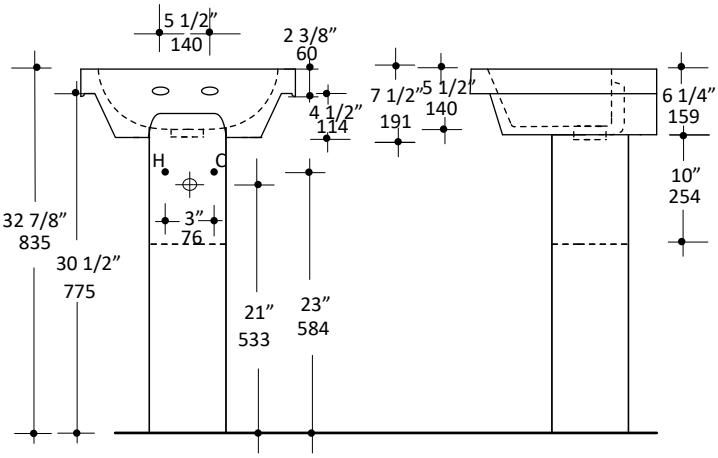

Recommended Items:

- Furniture
  - 4207 - Wall-mount porcelain shroud
  - 4231 - Freestanding porcelain pedestal
- European drain with overflow
  - 7100-12
  - 7100-13OF
  - 7100-16OF

LACAVA reserves the right to revise any dimension or information on this sheet without notice. Dimensions are nominal and may vary within an industry accepted tolerance of 1/4”. Drawings provided herein are meant to give the user an idea of the product and are not made to scale. Revised: 12/12/2023