LACAVA

# BLOCK
wall-mount sink
4500

## Specifications:

| | |
|---|---|
| **Installation:** | Wall-mount |
| **Exterior Dimensions:** | 27 1/2”w x 18 1/2”d x 13 3/4”h |
| **Material:** | Porcelain |
| **Weight:** | 50 lbs |
| **Overflow:** | No |
| **Finishes:** | 001 - White |
| **Faucet Holes:** | 00 - no hole<br>01 - one hole |
| **Faucet Hole Size:** | Ø 1 3/8” |
| **Drain Hole Size:** | Ø 1 3/4” |



## Features:

- Porcelain sink without overflow
- Mounting bolts are included
- Drain/trap included
- Recommended low-flow faucets with aerators to prevent splashing
- Glazed bottom
- Unfinished back

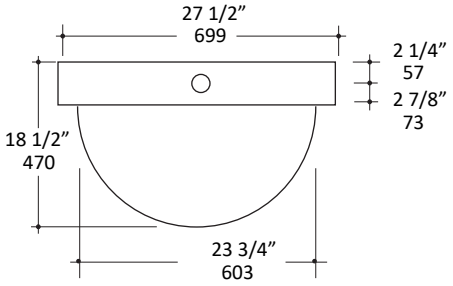


## Codes + Standards:

- Meets and exceeds applicable national codes and standards

ADA compliant when installed to specific requirements of this regulation

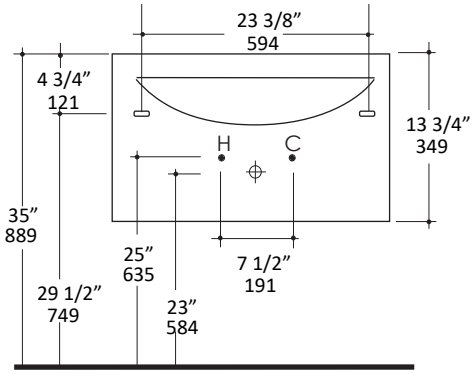


LACAVA reserves the right to revise any dimension or information on this sheet without notice. Dimensions are nominal and may vary within an industry accepted tolerance of 1/4”.
Drawings provided herein are meant to give the user an idea of the product and are not made to scale.
Revised: 6/24/2019