Mariposa®

66" x 36" drop-in whirlpool bath

K-1224

Features

- 66"L x 35-7/8"W x 20"H
- Removable apron for front pump access option
- Five adjustable ProFlex® whirlpool jets for maximum bather comfort
- Innovative technology enables this pump to provide a strong, steady level of hydromassage
- Textured bottom surface

Material

- Acrylic

Hydrotherapy

- Whirlpool

Installation

- Drop-in

Required Products/Accessories

K-T37391 Rotary-turn bath drain trim
K-T37392 Rotary-turn bath drain trim

or

K-37383 Rough-in cable bath drain, PVC, 30" cable with tubing
K-78438 30" cable bath drain

or

K-37385 rough-in cable drain, PVC, 45” cable
K-78439 45" cable bath drain

Recommended Products/Accessories

K-1601 Bath/whirlpool footstop, removable
K-7213 27" Cable Bath Drain
K-7214 27" Cable Bath Drain
K-23726 Drain treatment

Codes/Standards

ASME A112.19.7/CSA B45.10
CSA B45.5/IAPMO Z124
ASTM E162
ASTM E662
UL 1795
UL Listed

KOHLER® Plastic Baths and Shower Bases Lifetime Limited WarrantyKOHLER® Hydrotherapy Components Five-Year Limited Warranty

See website for detailed warranty information.

Available Colors/Finishes

Color tiles intended for reference only.

Color	Code	Description
	0	White

Mariposa®

66" x 36" drop-in whirlpool bath

K-1224

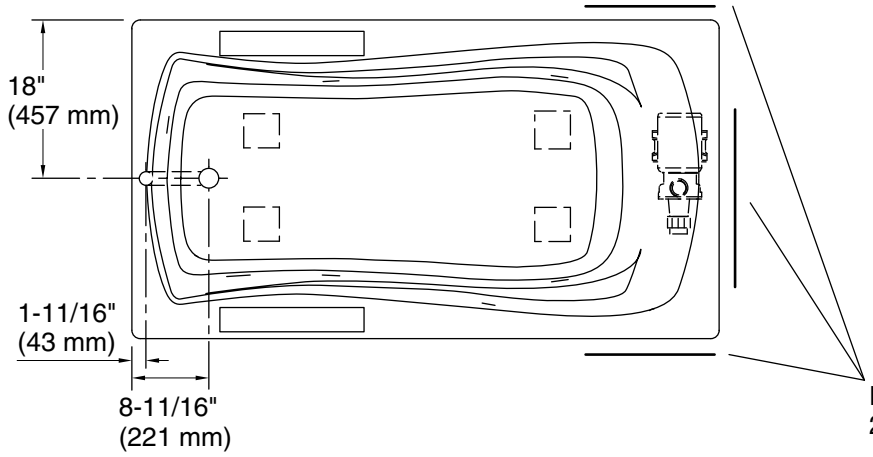

No change in measurements if connected with drain illustrated. (K-7161-AF)

Recommended Faucet Location

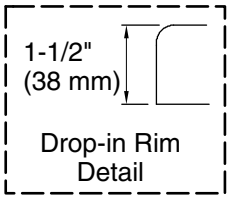

Pump/Control Access
20" (508 mm) W x 15" (381 mm) H

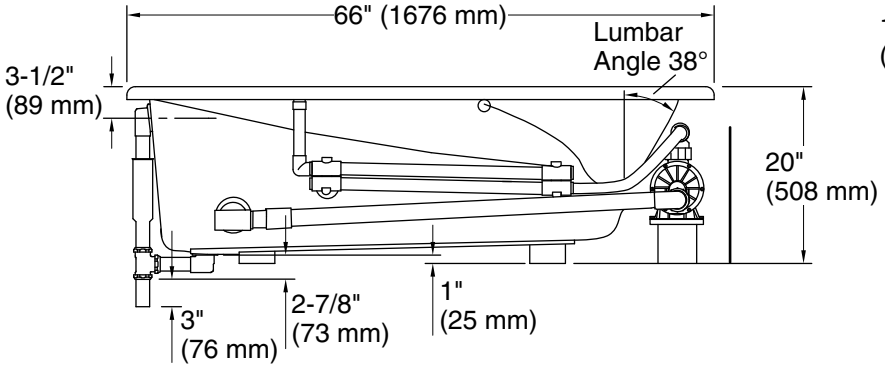

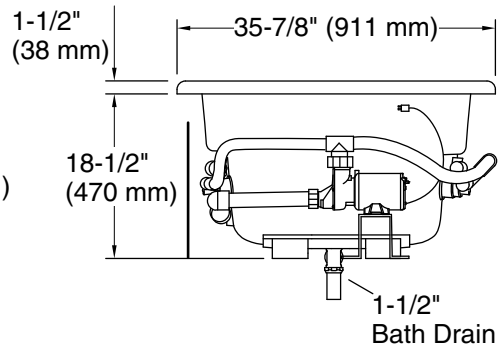

Required Electrical Service

One dedicated circuit required, protected with Class A Ground-Fault Circuit-Interrupter (GFCI). Outside North America, this device may be known as a Residual Current Device (RCD).

Pump:	120 V, 15 A, 60 Hz

Technical Information

All product dimensions are nominal.

Drain location:	Reversible
Basin area, bottom:	48" x 24" (1219 mm x 610 mm)
Basin area, top:	59" x 30" (1499 mm x 762 mm)
Weight:	110 lbs (49.9 kg)
Minimum floor load:	48 lbs/ft² (234.4 kg/m²)
Water depth:	14" (356 mm)
Water capacity:	67 gal (253.6 L)
Cutout:	Drop-in, 64" x 34" (1626 mm x 864 mm)
Electrical component rating:	Pump: 120 V, 7.5 A, 60 Hz
Pump speed:	Single
Minimum flat for door:	1-15/16" (49 mm)

Notes

Measure your actual product for rough-in details.

Install this product according to the installation instructions.

The hot water supply should be 70% of the capacity of the bath or greater. Installations will vary.

If installing a rim-mount faucet, make sure there is no interference above or below the deck before drilling any holes.