KSH2960,2,3,5,6,7,8CML
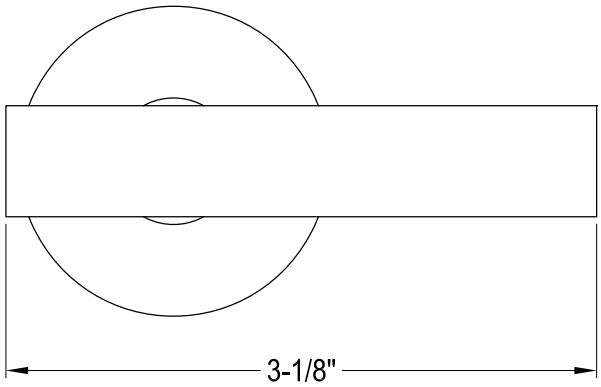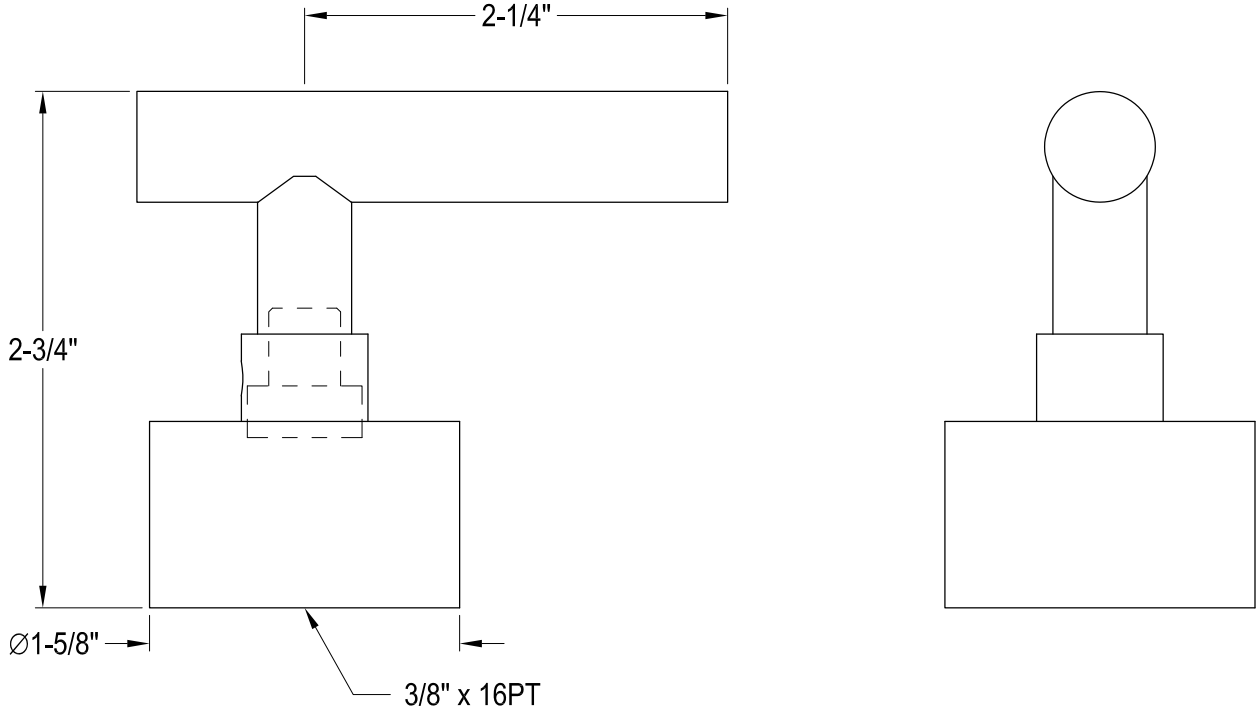
Lever Handle