Tub / Shower Faucet in Metal Cross Handle, Tub Only
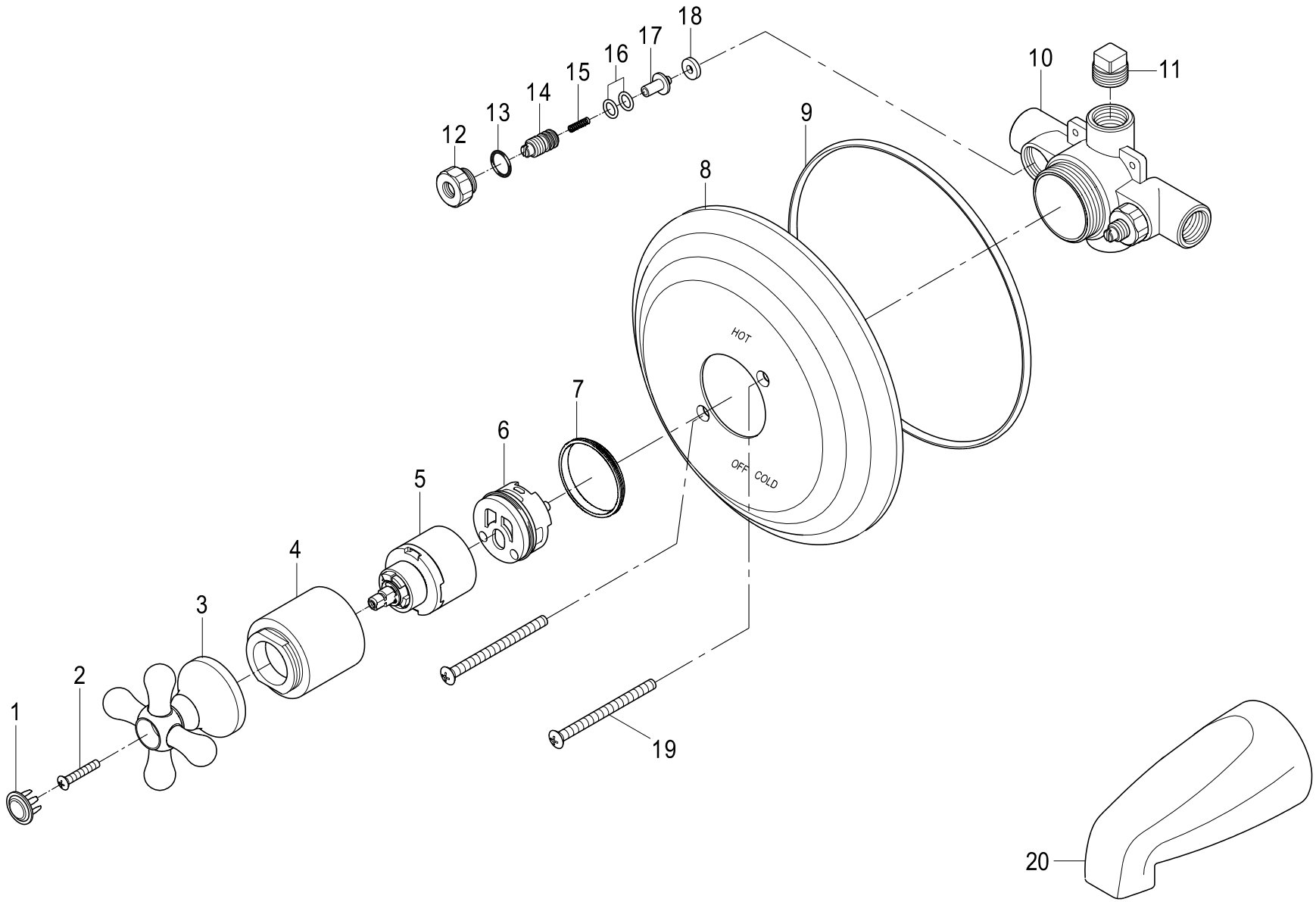
Dec 29, 06