Wiring for two or three W35/50 compressors using one pump.

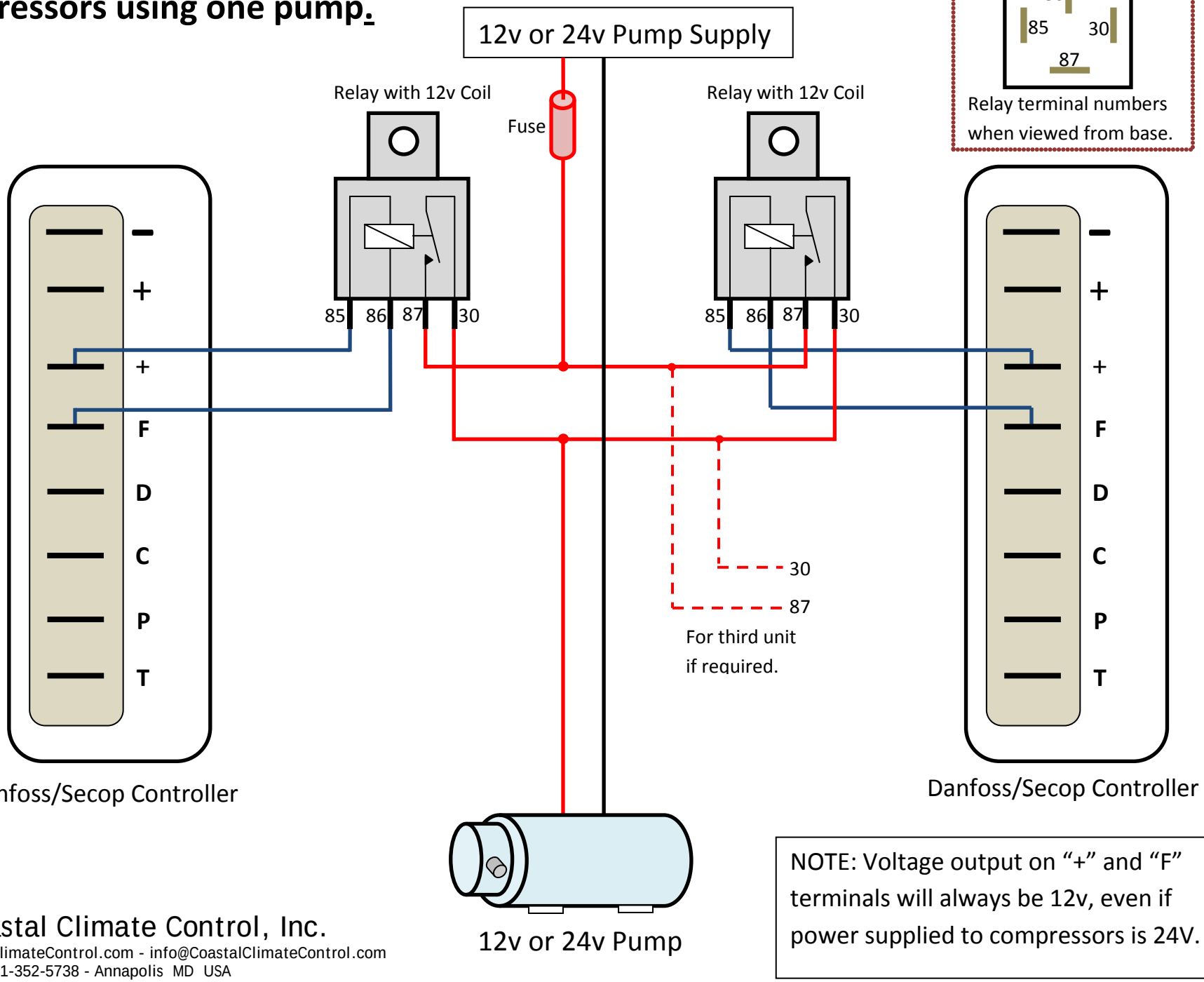

NOTE: Voltage output on "+" and "F" terminals will always be 12v, even if power supplied to compressors is 24V.

Coastal Climate Control, Inc.
www.CoastalClimateControl.com - info@CoastalClimateControl.com
301-352-5738 - Annapolis MD USA