ElectricBrewing SUPPLY

Home Brewery Control Panel

50a PID 2 Element Control Panel

Drawing Name: CKP0522

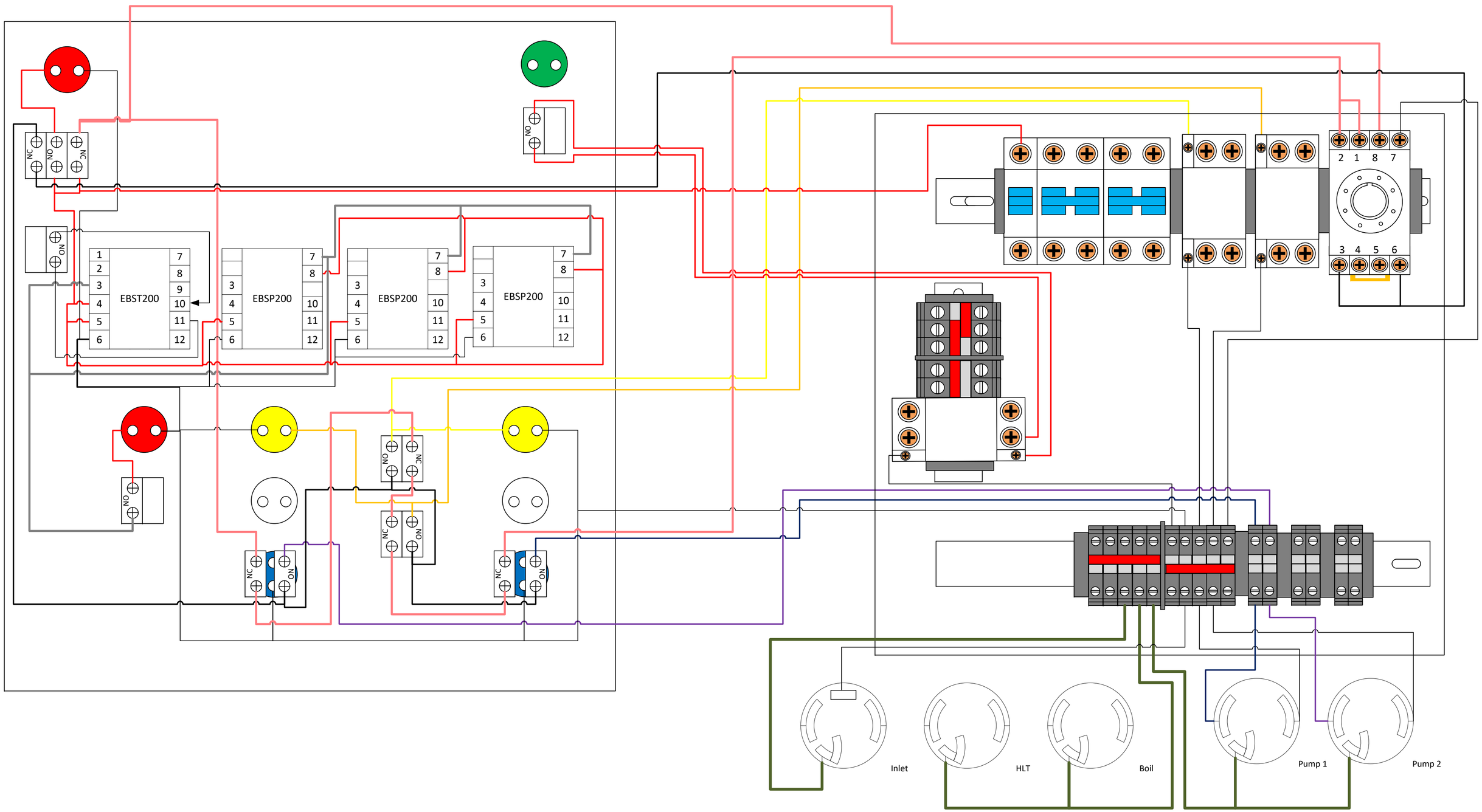

Home Brewery Control Panel

50a PID 2 Element Control Panel

Drawing Name: CKP0522

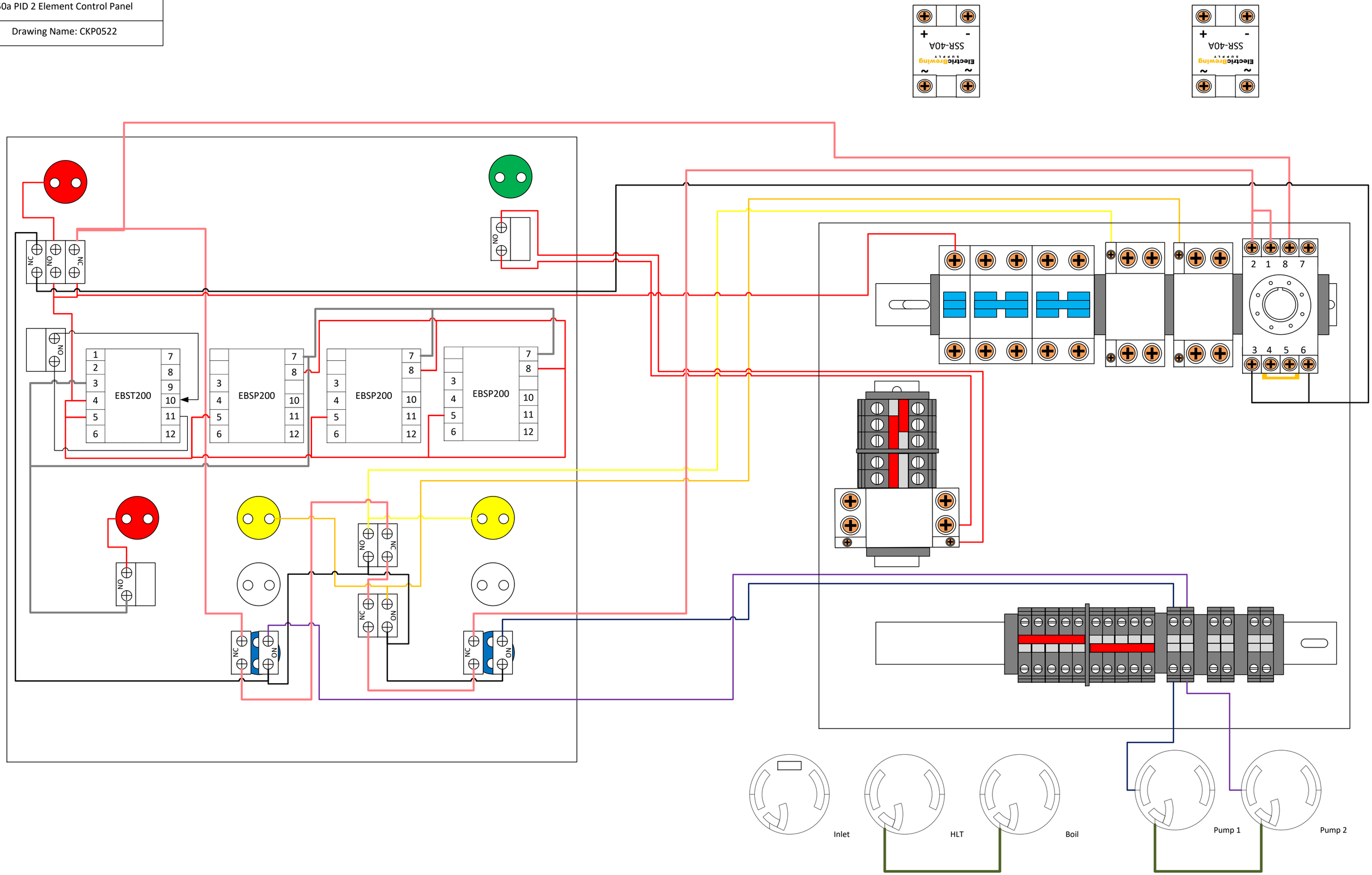

Home Brewery Control Panel

50a PID 2 Element Control Panel

Drawing Name: CKP0522

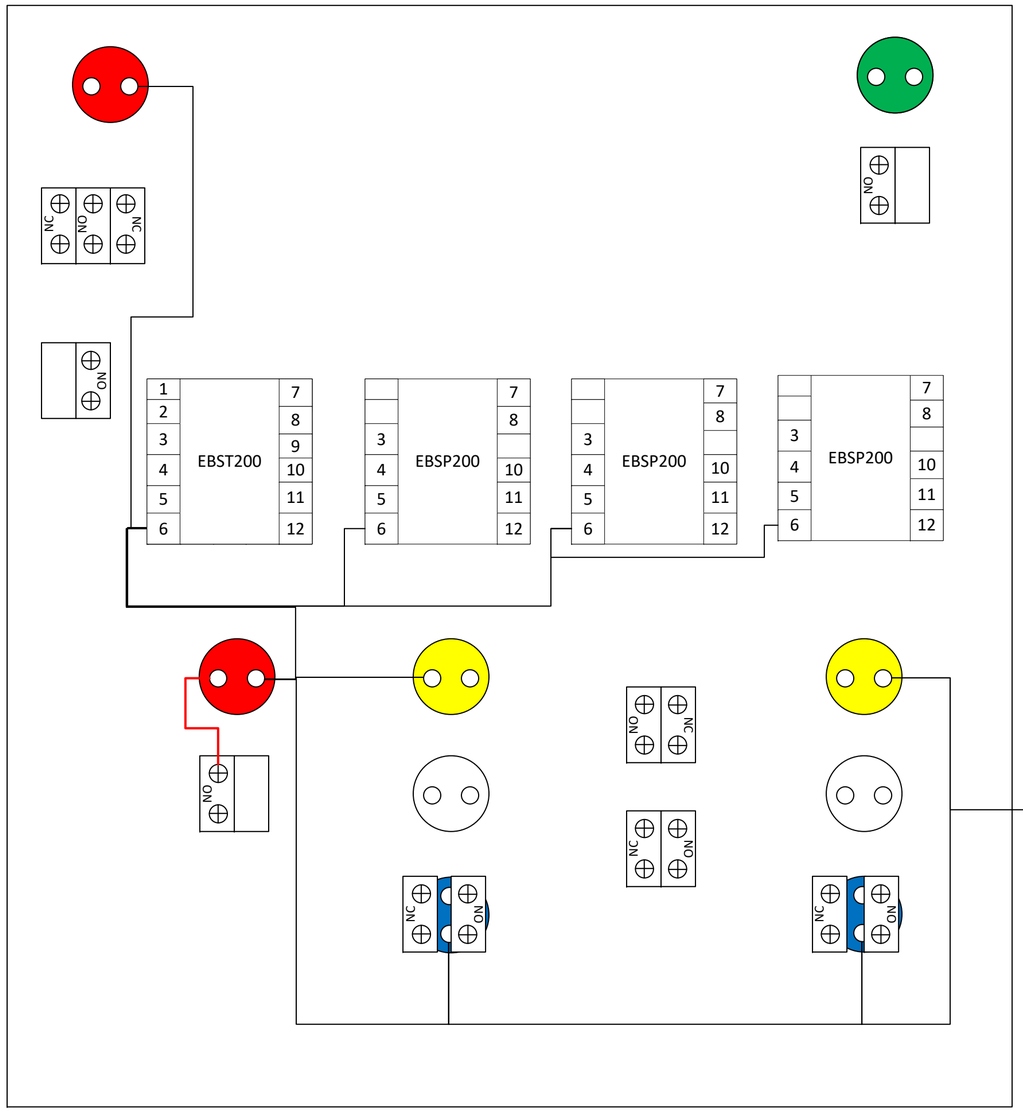

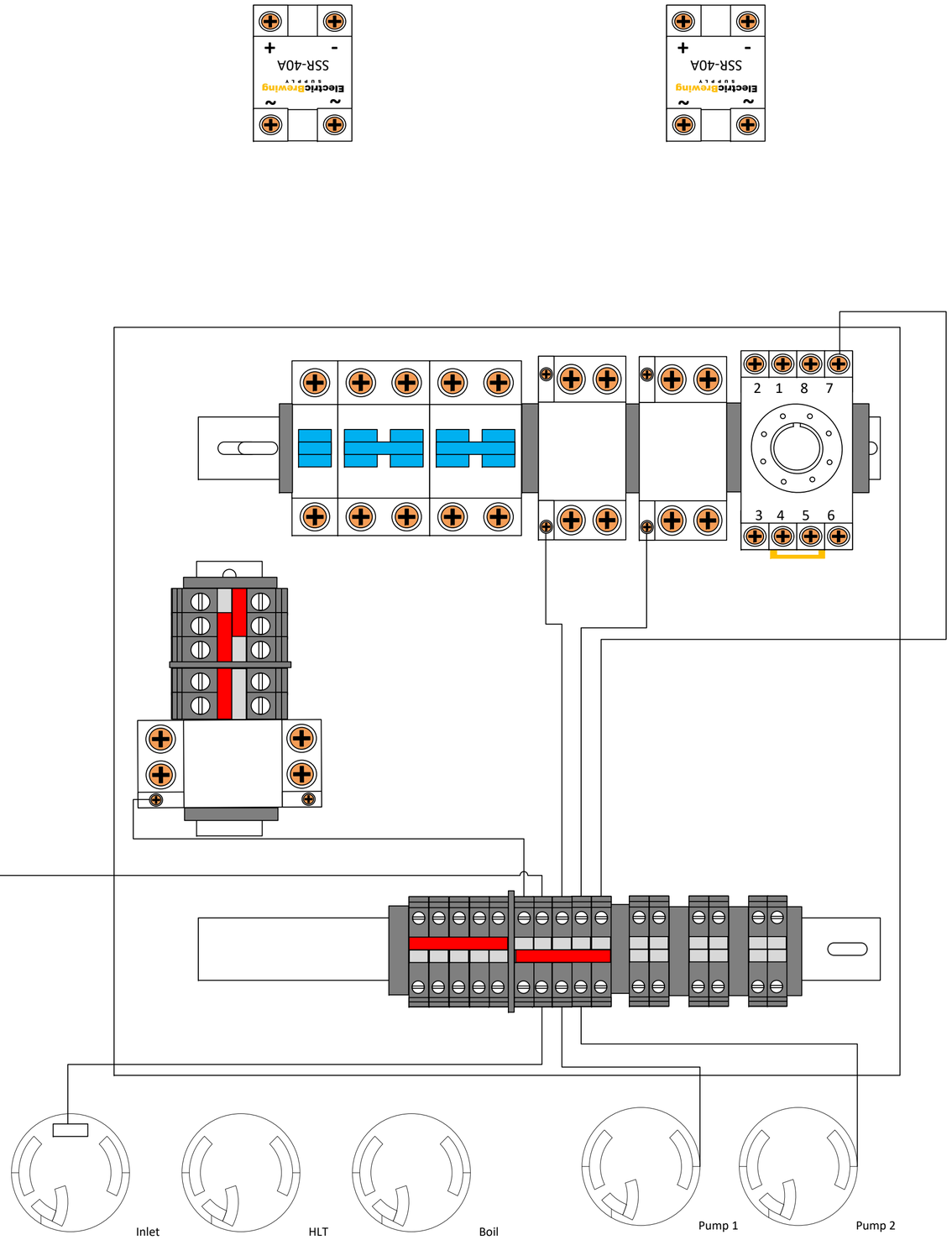

Home Brewery Control Panel

50a PID 2 Element Control Panel

Drawing Name: CKP0522

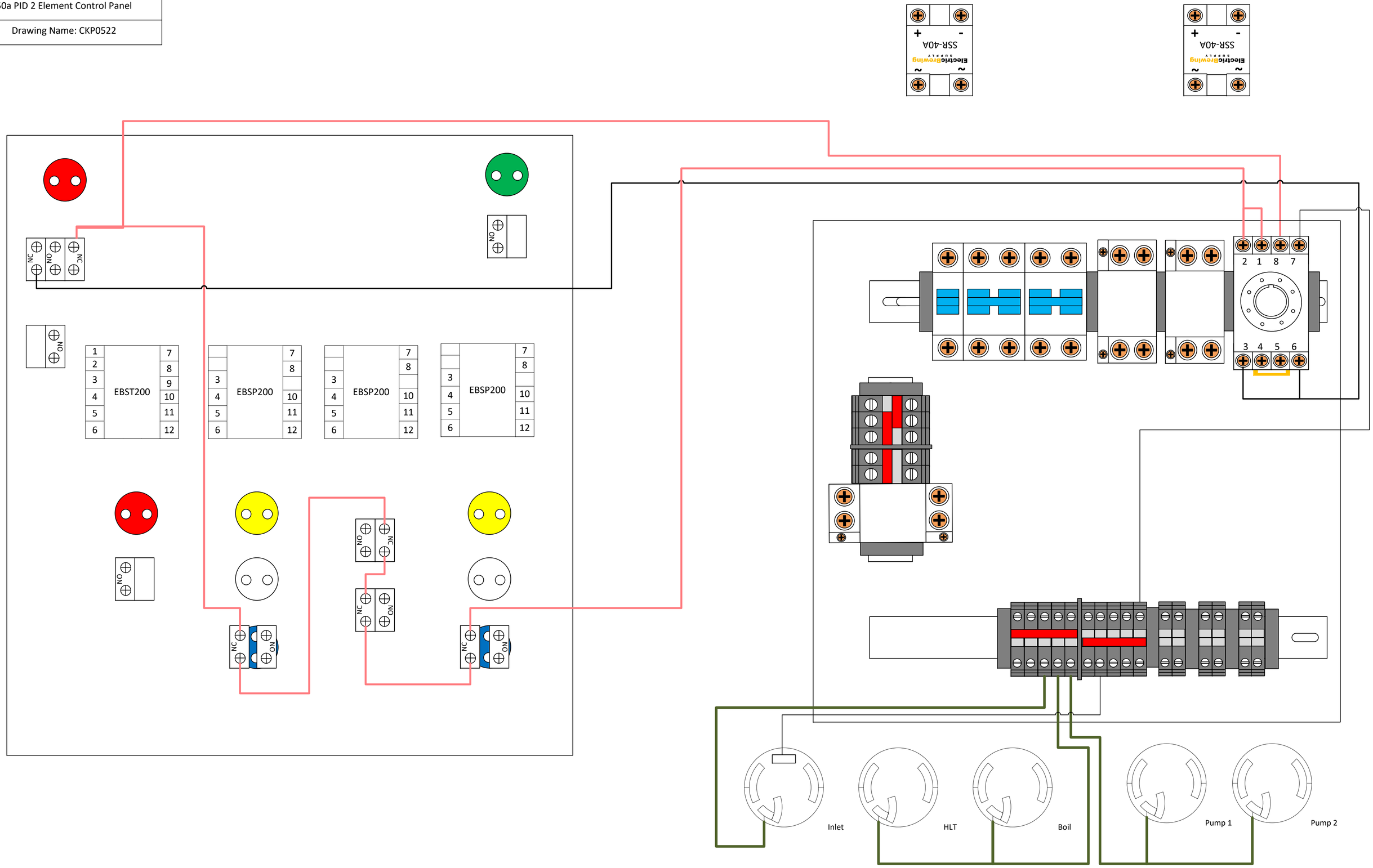

ElectricBrewing SUPPLY

Home Brewery Control Panel

50a PID 2 Element Control Panel
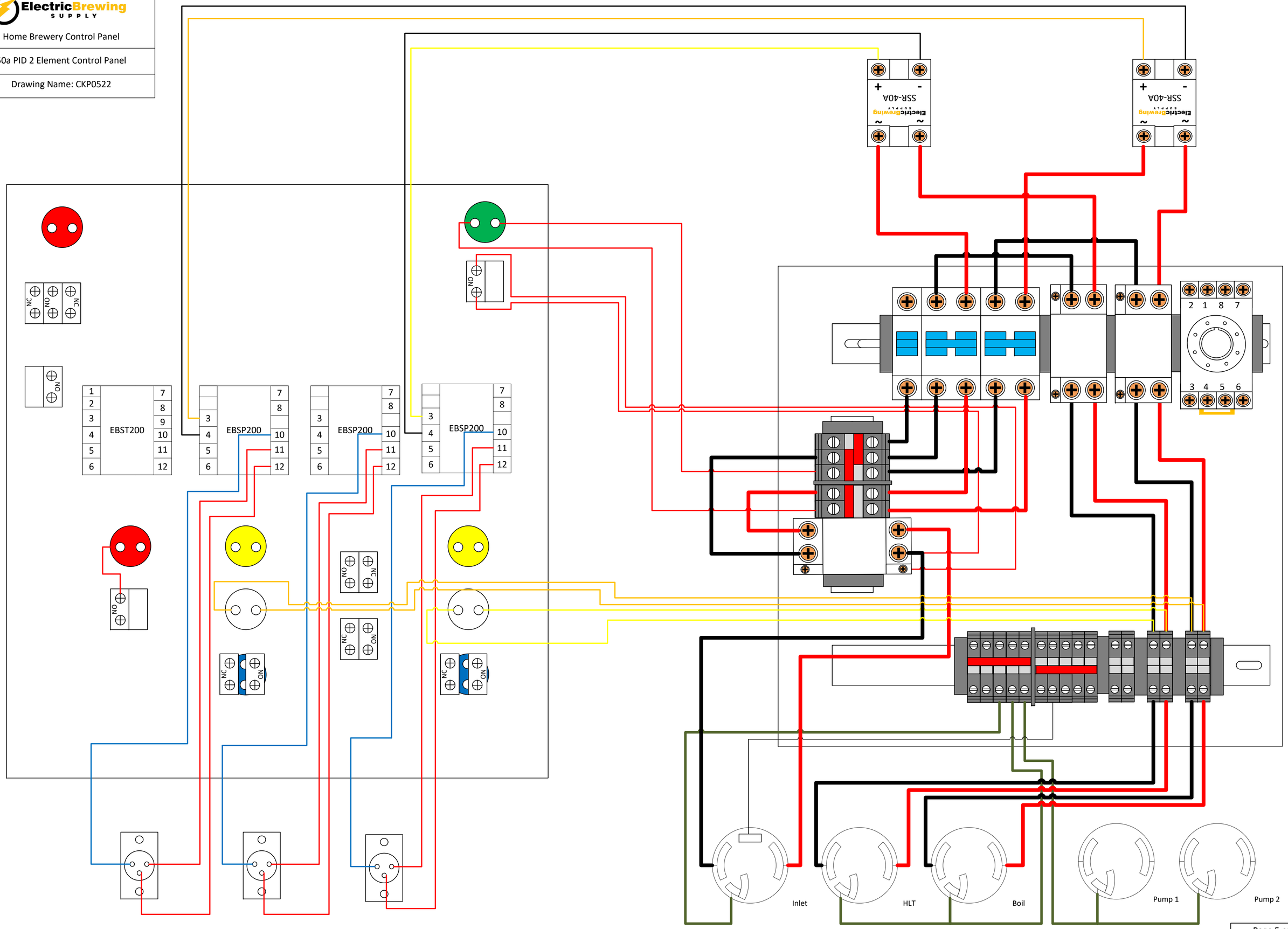
Drawing Name: CKP0522