Next Item

PLANNING COMMISSION AGENDA

Thursday, July 16, 2020

NOTICE IS HEREBY GIVEN that the Herriman Planning Commission shall assemble for a meeting in the City Council Chambers, located at
5355 W HERRIMAN MAIN STREET, HERRIMAN, UTAH

*** THIS MEETING WILL BE CONDUCTED ELECTRONICALLY ***

THIS MEETING MAY BE VIEWED BY CLICKING ON THE WATCH LIVE LINK AT HTTPS://WWW.HERRIMAN.ORG/AGENDAS-AND-MINUTES/PC-AGENDAS-MINUTES/

**** THIS MEETING HAS NO PUBLIC HEARINGS SCHEDULED ****

1. **6:00 PM - Work Meeting (Fort Herriman Conference Room)**
   - 1.1 Review of City Council Decisions
   - 1.2 Review of Agenda Items
   - 1.3 Discussion of future work sessions and topics

2. **7:00 PM - Regular Planning Commission Meeting**
   Call to Order

   2.1. Pledge of Allegiance

   2.2. Roll Call

   2.3. Conflicts of Interest

2.4. Approval of Minutes for the May 21, 2020 and June 4, 2020 Planning Commission Meetings
2020_05_21 PCM Minutes Draft.pdf
2020-06-04 PC Minutes Draft.pdf

3. Administrative Items
Administrative items are reviewed based on standards outlined in the ordinance. Public comment may be taken on relevant and credible evidence regarding the application compliance with the ordinance.

3.1. Request: Conditional use permit for the Wide Hollow Trailhead
Applicant: Herriman City
Address: 14755 S 6600 West
Zone: FR-1 (Forestry Recreation - 1 acre minimum)
Acres: 11
File Number: C2019-096
C2019-096 PC PACKET 7-16-20.pdf
PC 2020-07-16 item 3.1.pdf

3.2. Request: Conditional use permit for a Pump Track located on the Midas Creek Trail corridor
Applicant: Herriman City
Address: 5900 W 12200 South
Zone: R-2-10 (Medium Density Residential)
Aces: 0.17
File Number: C2020-040
C2020-040 PC PACKET 7-16-20.pdf
PC 2020-07-16 Item 3.2.pdf

3.3. Request: Conditional Use Amendment to the approved building elevations for Herriman Corners lot 7
Applicant: Dave Murdock
Address: 13338 S Rosecrest Road
Zone: C-2 (Commercial)
Acres: 1.188
File Number: C2019-085-01
C2019-085-01 PC PACKET 7-16-20.pdf

PC 2020-07-16 Item 3.3.pdf

3.4. Request: Plat Amendment for Fort Herriman Cove Phase 3 lots 310 and 311
Applicant: Donald Moriarty and Lacey Boyce
Address: 14478 and 14486 S Herriman View Cove
Zone: A-.25 (Agricultural - 10,000 square foot minimum)
Acres: 1.572
File Number: S2020-005
S2020-005 PC PACKET 7-16-20.pdf
PC 2020-07-16 Item 3.4.pdf

4. Chair and Commission Comments

5. Future Meetings

5.1 Wednesday, July 29, 2020 Joint Planning Commission/ City Council Meeting
5.2 Thursday, August 6, 2020 ~ Planning Commission Meeting
5.3 Wednesday, August 12, 2020 ~ City Council Meeting

6. Adjournment

In accordance with the Americans with Disabilities Act, Herriman City will make reasonable accommodation for participation in the meeting. Request assistance by contacting Herriman City at (801) 446-5323 and provide at least 48 hours advance notice of the meeting.

ELECTRONIC PARTICIPATION: Members of the Planning Commission may participate electronically via telephone, Skype, or other electronic means during this meeting.

PUBLIC COMMENT AND POLICY PROCEDURE: The purpose of public comment is to allow citizens to address items on the agenda. Citizens requesting to address the commission will be asked to complete a written comment form and present it to Wendy Thorpe, Deputy Recorder. In general, the chair will allow an individual two minutes to address the commission. A spokesperson, recognized as representing a group in attendance, may be allowed up to five minutes. This policy also applies to all public hearings.

I, Wendy Thorpe, certify the foregoing agenda was emailed to at least one newspaper of general circulation within the geographic jurisdiction of the public body. The agenda was also posted at the principal office of the public body, on the Utah State Website www.utah.gov/pmn/index.html and on Herriman City's website www.herriman.org

Posted and dated this 10th day of July, 2020

Wendy Thorpe,
Deputy Recorder

PLANNING COMMISSION MINUTES

DRAFT

Thursday, May 21, 2020
Awaiting Formal Approval

The following are the minutes of the Planning Commission Meeting of the Herriman Planning Commission. The meeting was held on **Thursday, May 21, 2020 at 6:00 p.m.** in the Herriman City Hall Council Chambers, 5355 West Herriman Main Street, Herriman, Utah. Adequate notice of this meeting, as required by law, was posted in the City Hall, on the City's website, and delivered to members of the Council, media, and interested citizens.

Presiding: Chair Chris Berbert

Commissioners Present Electronically: Andy Powell, Lorin Palmer, Jackson Ferguson, Heather Garcia, Andrea Bradford, Brody Rypien, Alternate Joy Kaseke, Alternate Heather Garcia was present but did not vote

Commissioners Excused: Adam Jacobson

Staff Present: Assistant City Planner Bryn MacDonald, Deputy City Recorder Wendy Thorpe, Communications Specialist Destiny Skinner

Staff Present Electronically: City Attorney John Brems, City Engineer Jonathan Bowers, Staff Engineer I Bryce Terry, Staff Engineer II Josh Petersen, Planner I Nick Whittaker, Assistant City Manager Wendy Thomas

THIS MEETING WAS CONDUCTED ELECTRONICALLY

6:30 PM – PLANNING COMMISSION WORK MEETING: *(Council Chambers)*

1. 6:30 PM Work Meeting (City Council Chambers)

Chair Berbert called the meeting to order at 6:33 p.m. and stated Commissioner Jacobson was excused from this meeting.

1.1. Review of City Council Decisions

Assistant City Planner MacDonald stated there were no new decisions. A couple months ago, moving a trail at Herriman Cove Way was discussed, and it was decided to vacate the trail. Council had a Public Hearing and the vote will take place in two weeks.

Assistant City Manager Wendy Thomas welcomed new City Attorney Chase Andrizzi and he offered a brief introduction.

1.2. Review of Agenda

Assistant City Planner MacDonald reviewed the agenda items.
Item 3.1 - Was a public hearing. She added the building permits for phase one have been received and looked really good.

Item 3.2 - Was a simple lot line adjustment.

The applicant requested for item 3.3 to be continued. Commissioners requested more information from the parking study and for a representative from Hale Engineering be available at the next meeting to answer questions. They wanted to know what time of day the traffic studies were conducted as parking has been a major issue.

Item 4.1 – Herriman City was the applicant for the review of a revised Transportation Master Plan which was on for public hearing

Commissioner Bradford requested an update on SLCC construction.

The new Redemption Bar and Grill opening day would be May 30th, 2020.

Planning Commission work meeting adjourned by consensus at 6:48 p.m.

7:00 PM – REGULAR PLANNING COMMISSION MEETING: *(Council Chambers)*

2. Call to Order – 7:00 PM

Chair Berbert called the meeting to order at 7:01 p.m. and welcomed those in attendance.

2.1. Roll Call

Full Quorum Present

2.2. Conflicts of Interest

No conflicts were offered.

2.3. Approval of Minutes for the April 16, 2020 Planning Commission Minutes

Commissioner Andy Powell motioned to approve item 1.3 Approval of Minutes for April 16, 2020 Planning Commission meeting and all voted aye.

Chair Berbert reviewed the public hearing guidelines.

3. Administrative Items

Administrative items are reviewed based on standards outlined in the ordinance. Public comment may be taken on relevant and credible evidence regarding the application compliance with the ordinance.

3.1. Request: Preliminary Plat approval for 60 condominium units, known as Parkside at Herriman Towne Center Phase 3 (Public Hearing)
Applicant: Edge Homes
Address: 13049 Cannavale Drive
Zone: MU-2 (Mixed Use)
Acres: 1.96
File: S2020-022

Assistant City Planner MacDonald explained the Parkside development was granted final master plan approval by the Planning Commission for the site plan and preliminary layout a few months ago. Condominium units required a separate plat be recorded to separate the units for individual sale.

Brandon Watson and Jaren Nicholls with Edge Homes stated this condominium plat was a mirror image of the opposite side of the "Y" road, which was presented and approved a month ago. They added this application was for the condominium plats only and would not change the density, amenities, or building elevations that were previously approved.

Chair Berbert opened the public hearing.

Deputy Recorder Thorpe read Parker Hansen's comment. He was against more townhomes or condos in Herriman Towne Center, due to the high percentage of condensed housing already in the area. This area should have single family homes for higher income families.

Chair Berbert closed the public hearing.

Commissioner Ferguson addressed the public hearing comment by stating the master plan, which assigned the number of units, was approved in 2008 and could not be changed by the Commission at this time.

Recommendations:

1. Receive and agree to the recommendations from other agencies.
2. Final plats to be reviewed and approved by the Engineering Department.
3. Receive and agree to the recommendations from other agencies.

Commissioner Andy Powell motioned to approve item 3.1 File #S2020-022 Preliminary Plat approval for 60 condominium units, known as Parkside at Herriman Towne Center Phase 3 (Public Hearing). Commissioner Joy Kaseke seconded the motion.

The vote was recorded as follows:

Commissioner Lorin Palmer	*Aye*
Commissioner Jackson Ferguson	*Aye*
Commissioner Andy Powell	*Aye*

Commissioner Joy Kaseke *Aye*
Commissioner Andrea Bradford *Aye*
Commissioner Brody Rypien *Aye*
The motion passed unanimously.

3.2. Request: Subdivision Plat Amendment for a Lot Line Adjustment Between lots 205 and 206 of the Cove at Herriman Springs
Applicant: Mike Rosier
Address: 6847 and 6829 Deer Mesa Circle
Zone: FR-1 (Forestry Recreation)
Acres: 0.351 and 0.385
File Number: S2020-030

Assistant City Planner MacDonald reviewed the request. The location and existing lot line were identified. The property owners of these lots requested the lot line adjustment to match the existing fence line. Each lot met the minimum required lot widths, size, and setbacks.

Recommendations:
1. Receive and agree to the recommendations from other agencies.
2. Final plat to be reviewed and approved by the Engineering Department.
3. The name of the plat should include that it is an amendment to The Cove at Herriman Springs Phase 2.

Commissioner Rypien motioned to approve item 3.2 file number S2020-030 Subdivision plat amendment for a lot line adjustment between lots 205 and 206 of the Cove at Herriman Springs. Commissioner Andrea Bradford seconded the motion.

The vote was recorded as follows:
Commissioner Lorin Palmer *Aye*
Commissioner Jackson Ferguson *Aye*
Commissioner Andy Powell *Aye*
Commissioner Joy Kaseke *Aye*
Commissioner Andrea Bradford *Aye*
Commissioner Brody Rypien *Aye*
The motion passed unanimously.

3.3. Request: Amendment of the site plan and building elevations for Belle Vea
Applicant: AFJS Holdings, LLC
Address: 14199 South 4800 West
Zone: MU-2 (Mixed Use)
Acres: 14.73
File Number: C2015-045-03

Assistant City Planner MacDonald informed the Commission the applicant asked for this item to be continued. She requested for Commissioners to review the current proposal and email comments to her. Garages were added to

courtyard units and parking questions would be addressed when they return in two weeks.

Commissioner Jackson Ferguson motioned to continue to the next meeting item 3.3 file number C2015-045-03 Amendment of the Site Plan and Building Elevations for Belle Vea to the next meeting. Commissioner Lorin Palmer seconded the motion.

The vote was recorded as follows:

Commissioner Lorin Palmer	*Aye*
Commissioner Jackson Ferguson	*Aye*
Commissioner Andy Powell	*Aye*
Commissioner Joy Kaseke	*Aye*
Commissioner Andrea Bradford	*Aye*
Commissioner Brody Rypien	*Aye*

The motion passed unanimously.

4. Legislative Items

Legislative items are recommendations to the City Council. Broad public input will be taken and considered on each item. All legislative items recommended at this meeting will be scheduled for a decision at the next available City Council meeting.

4.1 Request: Review of a Revised Herriman City Transportation Master Plan (Public Hearing)
Applicant: Herriman City
File Number: G2020-031

Herriman City Engineer Bryce Terry presented the Herriman Master Transportation plan. He explained the Traffic analysis procedures and projection were based on land use and anticipated population growth. Existing conditions were reviewed. Comparative travel statistics showed 50% of Herriman population commute within 20 minutes of home. Main roads, active transportation facilities were displayed. The City hoped to increase recreational infrastructure for bikes and connected trails. Crash locations were primarily along Mountain View Corridor (MVC). The City would continue to work with UDOT to reduce accidents at MVC intersections, and seek safer transportation networks. He explained the industry standard for Level of Service (LOS) congestion measurements was level "D". Which was defined as having roads used at capacity with no major delays. Length of delays at key intersections were studied, and found that up to a one minute delay was considered acceptable. This study was conducted at peak traffic times, in early 2020, before Covid-19. The delay measured from the moment the car started decelerating until it started accelerating again, at each intersection.

Commissioners requested plans for 13400 South. Engineer Terry said a seven lane cross section was projected. Currently the number of lanes drops on the Herriman side, compared to the Riverton side, causing delays. Improvements along 13400 South would be a joint project with Riverton. The current shoulders from Bangerter to 5200 West were wide enough for more lanes to be added by restriping the road, without expanding it. The 2030 traffic model projections with no growth were compared with anticipated growth models. Even with no new builds Herriman Highway was projected to need more lanes west of 5600, in areas where new residential developments

were planned. Historic Herriman has issues with limited space for expansion. In some areas sidewalks may need to be moved or removed. Alternate routes would be another option to reduce traffic on Herriman Main Street.

Commissioners questioned if space had been set aside for future Trax lines. Engineer Terry answered in the affirmative. He responded the City had created a Right Of Way (ROW) corridor in the transportation plan for potential Trax lines or rapid bus lines. Chair Berbert requested more information regarding bicycle and pedestrian trail connections. Engineer Terry displayed pedestrian and bike trail layouts for existing and planned connections. In addition, recent plans included additional trails near the RSL Complex.

The Capital Facilities Plan for new roads and expanding roads were reviewed. Between 5600 West and 6400 West on Herriman Highway updates were not portrayed on the model. It was anticipated that new north and south roadways would take over some of that traffic. Commissioner Powell pointed out some typographical errors and requested for the capital plan figures and the graphic to be included on the same page, when presented to the City Council. Engineer Terry added that future traffic signal plans would be amended to reflect the impact of Olympia Hills, as this plan was created before it was approved. The developers were required to improve traffic infrastructure, even outside of the development, to address increased traffic.

The Commissioners discussed which amendments and recommendations they should refer to the City Council. Commissioner Powell pointed out one page which was a duplicate and figure 51 was in the presentation twice. Figure 12 had some extra digits on some totals. Roundabouts were to be considered at some lesser used intersections, in certain areas. In some areas intersections were preferable.

Chair Berbert opened the public hearing.

No comments were offered.

Chair Berbert closed the public hearing.

Commissioners requested more information regarding projected traffic issues at the intersection of 12600 South and MVC. Engineer Bryce Terry explained the 2030 long range traffic model was good at projecting on straight roadways, but intersections were more complicated. MVC will be a freeway but it was unknown if it would be before or after 2030. The 2030 model did not include ramp improvements which would offer greater efficiency. Commissioners expressed the problems with the intersection at 12600 South and MVC were major and needed to be addressed.

Ian Kilpatrick stated the 2030 model did not have MVC as a freeway. The expansion of 12600 South and the addition of flex roads between MVC and Bangerter would be the responsibility of Riverton. Commissioners expressed the importance of making sure improvements were incorporated in the build Level of Service (LOS) plan models.

Commissioner Powell moved to recommend approval to City Council of item 4.1 file number G2020-031 Review of a revised Herriman City Transportation Master Plan (Public Hearing) with the recommendation that City Council first make sure that the build scenarios for 2030 were accurately looking at what the build environment will be, make sure the updates were done according to the bicycle and trail system layouts, and to accomodate updates with the amendment. Commissioner Lorin Palmer seconded the motion.

The vote was recorded as follows:

Commissioner Lorin Palmer	*Aye*
Commissioner Jackson Ferguson	*Aye*
Commissioner Andy Powell	*Aye*
Commissioner Joy Kaseke	*Aye*
Commissioner Andrea Bradford	*Aye*
Commissioner Brody Rypien	*Aye*

The motion passed unanimously.

5. Chair and Commission Comments

Commissioner Andy Powell asked if the City had any discussions regarding how much longer the meetings would be conducted electronically. Staff responded in the negative.

6. Future Meetings

6.1. Wednesday, May 27, 2020 City Council Meeting
6.2. Thursday, June 4, 2020 Planning Commission Meeting
6.3. Wednesday, June 10, 2020 City Council Meeting

5. Adjournment

Commissioner Lorin Palmer moved to adjourn the Planning Commission meeting at 8:18 p.m. All voted aye.

I, Wendy Thorpe, Deputy City Recorder for Herriman City, hereby certify that the foregoing minutes represent a true, accurate and complete record of the meeting held on May 21, 2020. This document constitutes the official minutes for the Herriman Planning Commission Meeting.

Wendy Thorpe

Wendy Thorpe

DRAFT

PLANNING COMMISSION MINUTES

DRAFT

Thursday, June 4, 2020

Awaiting Final Approval

The following are the minutes of the Planning Commission Meeting held on **Thursday, June 4, 2020 at 6:30 p.m.** in the Herriman City Council Chambers, 5355 W. Herriman Main Street (12090 South), Herriman, Utah. Adequate notice of this meeting, as required by law, was posted in City Hall, on the City's website, and delivered to members of the Commission and media.

Presiding: Chair Chris Berbert

Commission Members Present in Person: Jackson Ferguson, Adam Jacobson, Lorin Palmer, Heather Garcia

Commission Members Electronically: Andrea Bradford, Brody Rypien

Commission Members Absent: Andy Powell, Joy Kaseke

Staff Present in Person: Assistant City Planner Bryn MacDonald, Communication Specialist Destiny Skinner, Deputy Recorder Wendy Thorpe, City Engineer Blake Thomas, Staff Engineer II Josh Peterson, City Attorney Chase Andrizzi

6:30 PM Work Meeting *(City Council Chambers)*

Chair Chris Berbert called the work meeting to order at 6:38 pm.

1. Discussion Items

1.1 Review of City Council Decisions – Michael Maloy, City Planner

Assistant City Planner MacDonald informed the Planning Commission of the recent approval of the Mountain Ridge project, and the first eight phases have been submitted for review. It is anticipated this request will be scheduled to come before the Planning Commission next month. She also advised the Planning Commission

there were a couple small changes to the Master Development Agreement, but nothing would surprise them.

1.2 Review of Agenda Items

3.1 – Assistant City Planner MacDonald informed the Planning Commission that City Council had expressed concerns with the reduction in the Auto Mall acreage and changing it to commercial. Assistant City Planner MacDonald informed the Commission there have been no changes since the City Council meeting. The only reason for continuing this item is so Engineering has adequate time to review some items prior to the plat approval.

3.2 – Assistant City Planner MacDonald advised the Planning Commission of the packet they received from Belle Vea. She explained nothing had changed with the project.

4.1 – Assistant City Planner MacDonald referenced the re-zone from A-1 (Agriculture – 1 acre) to A-.25 (Agriculture – 10,000 square foot minimum). The applicant will bring a subdivision request of one acre in the future. Engineering has requested the house to face the dirt road, and not 6000 West, and to have the driveway paved.

Planning Commission work meeting adjourned by consensus at 6:45 p.m.

7:00 PM - Regular Planning Commission Meeting

2. Call to Order

Chair Chris Berbert called the meeting to order at 7:00 p.m. and welcomed those in attendance.

2.1 Invocation/Thought/Reading and Pledge

Mr. Tyler Kirk led the audience in the Pledge of Allegiance.

2.2 Roll call

Full Quorum Present.

2.3 Conflicts of Interest

No Comments were offered.

3. Administrative Items

Administrative items are reviewed based on standards outlined in the ordinance. Public comment may be taken on relevant and credible evidence regarding the applications compliance with the ordinance.

3.1 Request: Preliminary Plat Approval for an 8 Lot Commercial Subdivision (Public Hearing)
Applicant: Larry Myler

Address: 4950 West 12600 South
Zone: C-2 (Commercial) and AMSD (Auto Mall Special District
Acres: 14.73
File Number: S2020-012

Chair Chris Berbert advised of the continuation of this item; however, a public hearing would still be conducted.

Assistant City Planner Bryn MacDonald explained the applicant had requested preliminary plat approval for an eight lot commercial subdivision.This property is north of 12600 South and west of Mountain View Corridor. Planning Commission recommended to rezone this property to commercial at a prior meeting. Staff recommended continuing due to some engineering details that still needed to be considered. Planner MacDonald oriented the Commission of the property location.

Applicant Larry Myler offered to answer any questions. He stated the slope and road issues still needed to be revised. Mr. Myler explained the challenges with the parcel, and notated the plan is to have Gorilla Car Wash located on parcel three. Additionally, restaurants and other tax producing business are being soliciated for the remaining parcels. Mr. Myler indicated their group may decide to aquire a single lot plat approve since there were less challenges associated with the parcel. Mr. Myler explained they want Gorilla Car Wash moving forward, then finalize the remaining details with the rest of the commercial lots. Chair Berbert asked if anything could change the concept of the overall view? Mr. Myler responded the remaining parcel would all be commercial. He envisioned restaurants, convenience stores or a specialty grocery store in the area. He explained the City Council had some concerns of the rezone diminishing the capacity of the Auto Mall by explanding this C-2 zone northward. He opined this was not the case, as they have had discussions with different dealerships and all have requested five to seven-acre lots rather then the intial 10-acre lots. He explained they would still get the same amount of dealerships, but with smaller piece of land. He observed the 60- acres Auto Mall zone and suggested 50 acres would be adequate.

Assistant City Planner MacDonald advised the Planning Commission this project is not going to grow or diminish; however, it may change the number of lots, but relayed her opinion of it remaining as depicted. She explained the engineering issues with the project. Chair Berbert explained he was just making sure there was no reason to keep the item open. Commisioner Adam Jacobson commented since they are continuing it then it should be fine.

Chair Chris Berbert opened the public hearing.

Chair Berbert asked Deputy Recorder Wendy Thorpe if there were any comments submitted electronically. Wendy responded in the negative. No comments were offered electronically or in person.

Chair Berbert left the public hearing open.

Chair Berbert indicated some of the Planning Commission would like to leave this item open. The Commission agreed. Comissioner Jacobson asked if the applicant reduced the parcels, would they be required to reapply. Planner MacDonald responded, they would have to consider what would be proposed; however, the entire development could be approved and have the applicant return to the Planning Commission to phase the project. She acknowledged this was one reason why staff requested the continuation of the item to clearly identify the Engineering challenges with the area.

Commissioner Adam Jacobson moved to continue without date item 3.1file C2015-045-03 Preliminary Plat Approval for an 8 Lot Commercial Subdivision (Public Hearing). Commissioner Lorin Palmer seconded the motion.

The vote was recorded as follows:
Commissioner Andrea Bradford Aye
Commissioner Lorin Palmer Aye
Commissioner Adam Jacobson Aye
Commissioner Jackson Ferguson Aye
Commissioner Brody Rypien Aye
Commissioner Heather Garcia Aye
The motion passed unanimously.

3.2 Request: Amendment of the Site Plan and Building Elevations for Belle Vea
Applicant: AFJS Holdings, LLC
Address: 14199 South 4800 West
Zone: MU-2 (Mixed Use)
Acres: 14.73
File Number: C2015-045-03

Assistant City Planner MacDonald explained the applicant asked for an amendment to phase three of their site plans, which is on fourteen-acres. Planner MacDonald compared the various renditions of the elevations.. She reminded the Commission about the grade of the site, and explained they turned some of the buildings to make up for some of the issues. She also reminded them of a previous discussion regarding the parking. She noted they where able to add additional garages to the courtyard units and some additional detached garages. She explained they have met all of the required residential parking, and referenced the parking study that had been conducted for commercial requirements. The parking will be shared for about thirty thousand square feet retail space. She also addressed the changes regarding units, and presented pictures of where the retail space would front the street. The Landscaping plan was also reviewed. Planner MacDonald reminded the Planning Commission this meeting was not a public hearing, as it is a conditional use amendment. She acknowledged the applicants presence to answer questions.

Land Use Attorney Loyal Hulme expressed his appreciation for the work that Assistant City Planner MacDonald had done with this project. He highlighted they have a wonderful elevation with a sixty foot difference from one end of the site to the other. He explained when the original application was approved by

the Planning Commision they went back and realized people would not want to walk it, and there were problems with parking and access. He explained they have addressed these issues and felt that it will make it an even better development, and much better for Herriman City. He responded to a couple of the requests from last time they met with the Planning Commission. The first concern was with garages, he advised they have added eighty-one new garages with a total of one hundred and twenty-nine garages. This is for a total of one hundred and thirty-two courtyard units, so virtually each unit will have a garage. Commissioner Jacobson asked if that was underneath the building or included with the others? Mr. Hulme responded it included sixty-three integrated and sixty-six standalone garages. He explained the standalone ones were now in the middle and similar to the ones that you would have in a residential area. He also pointed out they had moved and increased a few of the courtyard units. He explained they felt this was the biggest concern of the Planning Commisson, and the developer agreed. He expressed appreciation for Commissioner Jacobson's excellent comments from the previous discussion. The retail space is more visible and accessible. Attorney Hulme opined this would be a good retail space for Herriman due to the changes that have been conducted including parking, signage and a more walkable development. He observed the twelve conditions that the Planning Commission had required, to which all have been met. The two substantive changes included: addressing the garage needs, and the parking requirements have been exceeded. Chair Berbert asked in what section the thirty-four parking units were located. Mr. Tyler Kirk stated these were distributed evenly throughout the site, but were concentrated around the retail area. Commisioner Jacobson asked where the tandem parking was on the map. Mr. Kirk explained they were integrated within the courtyard buildings in the garages. Commissioner Jacobson stated with double deep garages, it was more like twenty rather then thirty-four. Mr. Kirk agreed, and relayed his understanding of the ordinance was that these would be allowed to be counted. He continued to explain there were two tandem garages in each courtyard building, so total of four stalls. Commissioner Jacobson asked if these garages were attached. Mr. Kirk answered in the affirmative. There were some units that would transition through a hallway from the garage. Mr. Kirk informed the Planning Commsion they integrated as much as possible. Garages were utilized to help transition the grade of the site. This also helped reduce the height of the courtyard buildings to a two-story element. Commissioner Jacobson asked if there was a walkway between some of the buildings. Mr. Kirk answered in the affirmative, and added they would be accessible walkways. Commissioner Ferguson wanted to know if there was a desire to connect the garage access route to the roadway along the north side. Commissioner Ferguson pointed out that currently there were only three access points for the project. Planner MacDonald explained there used to be another one; however, it had to be removed. Mr. Kirk explained there was a lot of debate regarding the access as they tried to limit the access to the townhome area. Commisioner Jacobson felt they had accomplished more in line with what the Commission was asking, but he liked the architecture of the old buildings better. Commissioner Lorin Palmer asked Assistant City Planner MacDonald where they were on open space with the addition of the parking. Planner MacDonald explained the project was still at 33-percent. Commissioner Palmer felt a lot of open space had been lost. Mr. Kirk said he felt they were very close to the original plan and opined there was a 1,500 square foot difference. Planner MacDonald agreed. Mr. Hulme explained there was more open area in the courtyard as well as throughout, and referred to the map for retail space. He explained it opened up more for pedestrian access which would make it more functional with this distribution of open space. He explained

the project felt more open even though the space was not connected.

Chair Berbert asked if there was any further questions. There were none.

Chair Berbert commented the only part that he was disappointed with was the original courtyard architecture and feel. He felt it had changed quite a bit from the original plan and didn't feel as open. He agreed the plan had met the requirements set forth by the Planning Commission. The Commission discussed if they should have the applicant bring back the material boards for review. Commissoner Jackson Ferguson stated he felt the only big difference that he saw was instead of a row of garages they have a row of parking stalls in front of the buildings. He felt there was really no way past that with the slope of the site. The Commission felt the transition of the building was positive. Commissioner Brody Rypien felt the transition was nice, and appreciated the walkability of the project.

Recommendations:

1. Buildings shall be setback a minimum of 50 feet from 4000 West and have 10 feet between buildings, including any porches.
2. Park/Amenities to be installed by the developer or builder prior to 50 percent of the building permits being issued.
3. The total number of units approved is 501. This is 141 townhomes, 132 courtyards units, and 228 stacked flats**.**
4. The density of 13.42 units per acre is based on the retail component of the project. If the plan is changed to remove the retail, the density will be adjusted and must be below 10 units per acre overall.
5. Elevations, material boards and colors approved as submitted for phase 3. The elevations, materials, and color boards for the courtyard units shall come back to the Planning Commission for review prior to plat approval.
6. Residential parking shall be provided per City Code, which requires 725 parking spaces. Parking for the commercial area shall be provided per the parking study, which states 22 parking spaces is adequate. The current plan provides 781 parking spaces to comply with this requirement.
7. At least fifteen percent (15%) of the total site shall be landscaped. A landscaping plan shall be submitted to the staff for approval as part of the engineering review. This shall include trees and other landscaping elements around the perimeter of the development.
8. Complete a traffic impact study.
9. Work with development to the north to combine retention ponds into one facility. All stormwater runoff to be retained on-site. The retention pond must be landscaped per City standard by the developer.
10. Dedicate 33 feet of property along east side of development to serve as a maintenance access road to the retention pond.
11. Install the full width of 4000 W, including curb, gutter, parkstrip, and sidewalk on the west side and only curb/gutter on the east side of the road. This should be installed prior to any building permits being issued for Phase 3.
12. The height of each portion of the building shall be less than the height shown in the "Building Height Exhibit" dated March 3, 2016.

Commissioner Adam Jacobson moved to approve item 3.2 file number C2015-045-03 Amendment of the Site Plan and Building Elevations for Belle Vea with staff twelve recommendations, including an alteration to number five that the elevations, material boards and colors shall come back for the courtyard units prior to plat approval. Commissioner Lorin Palmer seconded the motion.

The vote was recorded as follows:
Commissioner Heather Garcia Aye
Commissioner Brody Rypien Aye
Commissioner Jackson Ferguson Aye
Commissioner Adam Jacobson Aye
Commissioner Lorin Palmer Aye
Commissioner Andrea Bradford Aye
The motion passed unanimously.

4. Legislative Items

Legislative items are recommendations to the City Council. Broad public input will be taken and considered on each item. All legislative items recommended at this meeting will be scheduled for a decision at the next available City Council meeting.

4.1 Request: Rezone Property from A-1 (Agricultural-1 acre) to A-.25 (Agricultural – 10,000 square foot minimum) (Public Hearing
Applicant: Brandon Marble
Address: 12609 South 6000 West
Zone: A-1 (Agricultural – 1 acre minimum)
File Number: Z2020-027

Assistant City Planner Bryn MacDonald reviewed the application request to rezone 1.13 acres located at 13609 South 6000 West. Planner MacDonald oriented the Commission to the location of the property. The applicant wanted to rezone the property A-.25 to be able to subdivide the property due to the location of the home. The applicant would be unable to make two half-acre lots due to the location of the home. Planner MacDonald reported there would be a public hearing for the rezone, which would be followed by a subdivision application. She explained staff had been working with the applicant regarding issues and other improvements to the property. She futher explained this subdivision would essentially make a flag lot. She advised the Planning Commission the applicant may not be able to meet all of the flag lot ordinance, which would require an exception to the ordinance approved by City Council. Commissioner Jacobson clarified the need to look at making this a public street through this phase. He explained this would happen everywhere in Herriman, especially if the A-.25 zoning was recommended. Chair Berbert asked if a zoning condition be placed on the development to not allow parcels smaller than one-third acre. Commissioner Jacobson asked if there was any way the applicant would consider A-50. A discussion ensued regarding the problematic issues pertaining to zoning this property to A-.50 mainly due to the location of the driveway and the need to dedicate

right-of-way along Pioneer Street. The City Council previously changed the Flag Lot Ordinance which makes this specific property difficult to subdivide resulting in the applicant requesting the A-.25 Zone.

Applicant Brandon Marble addressed the Commission and recognized this lot does present a lot of problems based on the current ordinance. He explained the lot was created in the 1990's legally through Salt Lake County. He relayed their preference to have this subdivided as half-acre lots. The current easement prohibiting this has been in place for over thirty years. He explained they would like to make this a simple subdivision. He stated their willingness to work with Herriman City to accomplish the goal. Chair Berbert asked the Commission if they had any questions. No questions where asked.

Chair Berbert opened the public hearing. Chair Berbert asked Deputy Recorder Wendy Thorpe if there were any comments submitted electronically. Wendy responded in the negative. There were no public comments offered.

Chair Chris Berbert closed the public hearing.

Commission Rypien suggested the Planning Commission offer a recommendation to the City Council for the property to be zone to A-.50. Commissioner Jacobson agreed. Chair Berbert asked if this subdivision was feasible in an A-.50 zone. Commissioner Heather Garcia stated the applicant was trying to do what would fit into the community. She referenced the easement which ruined their chances of requesting the A-.50 zone. She relayed her position of allowing the A-.25 zoning for this instance. Commissioner Jacobson explained his concern of having the quarter acre zoning around all of the one-acre parcels. He added the drawback ultimately caused a flag lot issue, which was the reason other subdivisions were not granted the A-.25 zoning. Planner MacDonald explained the different subdivisions surrounding this project. Commissioner Ferguson asked if there had been a survey done on this property? Planner MacDonald responded in the negative. The Commissioners continued their discussion regarding flag lots. The Planning Commission consensus determined that by definition this would be a flag lot. Commissioner Palmer questioned if they recommended A-.50, could the City Council still approve A-.25 zoning. Planner MacDonal responded in the affirmative, because the Planning Commision offers a recommendation; the City Council could adjust the recommendation as deemed necessary.

Commissioner Adam Jacobson moved to recommend to City Council approval of a rezone from A-1 to A-.50, for item 4.1 file number Z2020-027 Rezone Property from A-1 (Agricultural- 1 acre) to A-.25 (Agricultural – 10,000 square foot minimum). This recommendation would be to ensure the City does not continue spot zoning throughout the old town community. Commissioner Andrea Bradford seconded the motion.

The vote was recorded as follows:
Commissioner Heather Garcia Nay
Commissioner Brody Rypien Aye
Commissioner Jackson Ferguson Aye

Commissioner Adam Jacobson Aye
Commissioner Lorin Palmer Aye
Commissioner Andrea Bradford Aye
The motion passed with a vote 5:1

5. Chair and Commission Comments

Commissioner Heather Garcia asked if Localscapes had been approved by the City Council. Planner MacDonald responded in the negative. Commissioner Garcia asked for a status update on the General Plan. Planner MacDonald advised the Commission the first draft was anticipated to be finished this month; however, was not certain of that deadline. Commissioner Adam Jacobson commented for engineering to consider roadway requirements if they were going to require the City to continually approve zoning changes, which could ultimately affect multiple properties.

6. Future Meetings

7.1 City Council Meeting – **Wednesday, June 10, 2020** @ 7:00 PM
7.2 Planning Commission Meeting – **Thursday, February 21, 2019** @ 7:00 PM

7. Adjournment

Commissioner Adam Jacobson moved to adjourn the meeting at 8:05 p.m. and all voted aye.

I, Wendy Thorpe, Deputy City Recorder for Herriman City, hereby certify that the foregoing minutes represent a true, accurate and complete record of the meeting held on June 4, 2020. This document constitutes the official minutes for the Herriman Planning Commission Meeting.

Wendy Thorpe

Wendy Thorpe

DRAFT

Date of Meeting: 7/16/2020	
File #	C2019-096
Applicant	Herriman City
Address	14755 S 6600 West
Request	Conditional use for the Wide Hollow Trailhead

Staff Report

DATE: July 7, 2020
TO: Planning Commission
FROM: Bryn MacDonald, AICP, Assistant City Planner
MEETING: Planning Commission Meeting July 16, 2020
REQUEST: Conditional use permit for the proposed Wide Hollow Trail Head

Applicant:	Herriman City
Address:	14755 S 6600 West
Zone:	FR-1 (Forestry Recreation)
Acres:	11
File Number:	C2019-096

Request
Herriman City is requesting a conditional use permit for the proposed Wide Hollow Trail Head.

Process
A conditional use is an administrative decision. The Planning Commission will hold a public meeting and make a decision based on compliance with the approval standards.

Notices
Notices are not sent for conditional uses.

Discussion
The City is proposing to build a trailhead at the end of 6600 West. The trailhead will consist of 66 parking spaces, as recommended by the traffic study. It will include a restroom, drinking fountain, benches, shaded picnic table, and map kiosk. There will be a challenge staircase located on the property. There will also be a security camera on site.

A neighborhood meeting was held on November 12, 2019 (see attached comments). There were 7 residents in attendance who had many concerns about the proposed trailhead. There was concern about traffic, car lights, and security of the site.

A second neighborhood meeting was held on June 29, 2020. This meeting was attended by 13 residents. Many of the comments were positive, and expressed they were looking forward to the project. They stated it would be a great amenity for the area. There were also still concerns about increased traffic and safety in the area.

Recommendation
Staff recommends approval of the conditional use for the Wide Hollow Trailhead.

Attachments
A. Vicinity Map
B. Site Plan
C. Neighborhood meeting comments

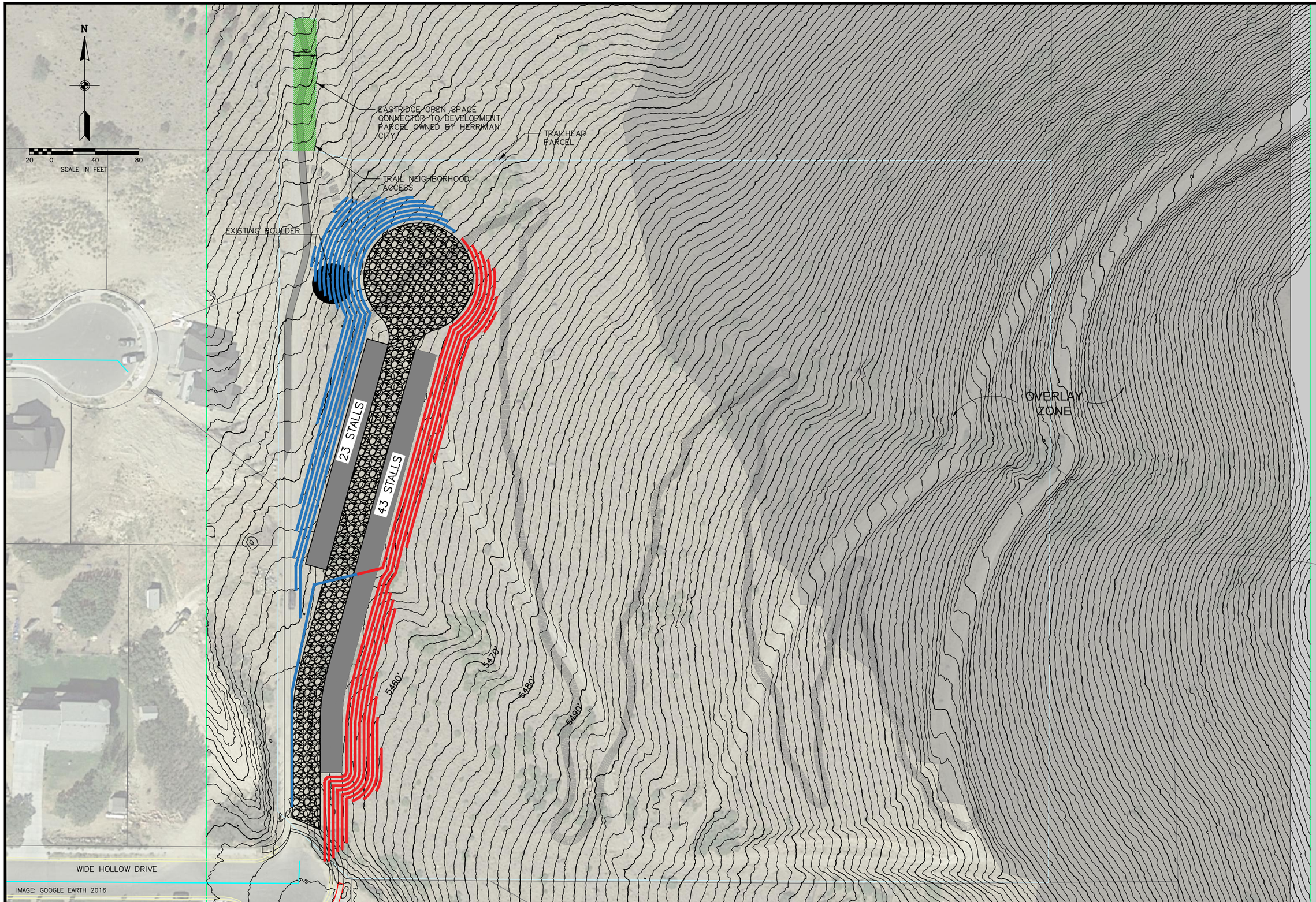

BOWEN COLLINS & ASSOCIATES

NO.	DATE	REV. BY	DESCRIPTION

REVISIONS

HERRIMAN CITY
WIDE HOLLOW TRAILHEAD
HERRIMAN, UTAH

VERIFY SCALE
BAR IS ONE INCH ON ORIGINAL DRAWING

REVIEW
CHECKED JKT
APPROVED JKT

DESIGN
DESIGN JKT
DRAWN JKT

LANDSCAPE
CONCEPT PLAN E

DATE: 10/23/2019
PROJECT NUMBER 217-19-05

DRAWING NO.
L-01
SHEET 1 OF 1

P:\Herriman\217-19-06 - Wide Willow Trailhead Design & CM\2.0 Design Phase\2.7 Drawings\sht\217-19-05_5-29-2020,5.dwg Plotted: 5/29/2020 5:42 PM By: Jamie Tsandes

S+K
smoo
Dick

WINFORD
THE DOG

WEDRO
THE DOG

Wide Hollow Trailhead

Description: Wide Hollow Trailhead will have 66 parking spaces as recommended by the traffic study. It will include a challenge staircase, a restroom, a drinking fountain, benches, a security camera, a map kiosk, shaded picnic table.

Neighborhood meetings

Date: November 12, 2019, 6-7 pm
How many people attended? 7
Comments and concerns collected from meeting:

- Comments and feedback regarding concept
  - Traffic Study needed
- What do you like?
  - Stair Challenge
- Something you don\t like?
  - Move the parking further to the North
  - Make Entrance and exit the same driveway cut
  - Make it so the car lights don't shine in my kitchen window
- Any additional comments
  - Safety and security are my biggest concern

Date: June 29, 2020, 6-7 pm
How many people attended? 13
Comments and concerns verbally given:

- Traffic and speeding down Wide Hollow is a problem.

Comments and concerns collected from Comment Cards:

- Comments and feedback regarding concept
  - Looks great! We love the Concept! Please Do it.
  - I like that there is a lot of parking. Restrooms would really be nice. A bike repair station would be great.
  - As a resident of the Cove I am very excited for this! More trials close to home = fun outside activities and higher property values for those of use close to it!
  - Love it!
  - As a resident of the Cove so excited for it.
  - Placing a barricade and tree line along the whole west side.
  - I would like to see trees and vegetation between the slope and the path behind Lewis House – 6611 West Sky Bird
  - I would like to see a playground to change the dynamic and demographic.
  - Please allow funds for stairs before a bathroom. Bathrooms will attract transients, trouble makers even more than it already does.
  - Allow funds for stairs first ☺
- What do you like?
  - Stair Trail

    - Love the parking and the location more away from the homes. Good Compromise.
    - I like that the boulder is staying. It seems like a good use of space.
    - Biking/hiking can be a great activity with little disruption!
    - I love the idea of the stairs and a playground.
    - The Stair Challenge
    - Dawn to dusk park
    - It's fun.
    - Stair Challenge
- Something you don\t like?
    - I would like to see some kinds of playground and some trees
    - Make sure parking lot is plenty big so overflow doesn't end up parking in neighborhood.
    - Get rid of the rock or the graffiti on the rock.
    - Playground (family Friendly) and Pavilion
    - Vegetation barrier between houses
    - Split rail fence along path
    - Please consider safety – surveillance
- Any additional comments
    - Keep Painted rock please!
    - It would be nice for the trail system to link to the Yellow Fork Trailhead that would make sense and flow better.
    - Keep more trials coming! They really add to the value of the city.
    - Thanks for putting this in! All the trials you can add are awesome! (Unless they allow those loud OHV\s – none of that is welcome to impose on my day!)
    - I would like to see a trail alongside Rose Canyon Road. All the way to Yellow Fork Trailhead. Who can you send this to that can get and so something with that I have tried to contact someone at the County and get no response. There are so many bikes and runners going up the road.
    - A playground up in that area of Herriman (by the trailhead and that neighborhood) would be nice too!
    - Will the Eastridge Development connect to the trail and how?
    - No parking signs in front of 6626 W Wide Hollow Drive. There are people parked in front all Saturday long.
    - No Barricades
    - Please put stairs in before a bathroom.
    - A bathroom will attract trouble makers

Questions/Concerns in the order they were asked:

Email 1 (Jun 30, 2020, at 9:28 AM)

Concern #1. Thank you for the prompt email. I came home from last night shocked that after raising this concern at the last public house that nothing had been addressed and no plan put in place on how to keep children safe not only from the speeding but from the random people you are inviting to come into our neighborhood who do not have vested interest in this community. At the first open house when I raised the concerns of safety with the Police Chief, he echoed my concerns and agreed he too had concerns about opening up our community to individuals with nefarious motives. We are not naive to think that if a child in a neighboring community can almost be abducted that something like that can not occur here when you freely give people a false reason to come up here. It was extremely disheartening that a community who prides itself on families didn't have a concrete plan on how to move forward while keeping children safe and I was told point blank it probably wouldn't be because its not your job despite your project having a direct correlation to an increased risk for our children and families. It seems extremely negligent, irresponsible, and short sighted to pass this plan on to the planning commission until you take the safety of the community as more of a concern than was shown last night. I also made it abundantly clear I am not opposed to the project as a whole, but am rightfully concerned about the lack of care and foresight being shown in this plan to keep children safe. At one point last night someone told me it was the parents job to keep children safe and that there are inherent risks of living on a street no mater where you live for speeding. While I concur to a degree, it is also the cities responsibility to make sure that if you create an area that brings in outside members of the our neighborhood into it and create more risks that you do so prudently with an eye on the liability and danger it creates for the said community.

Response #1. *This traffic concern was forwarded immediately to the traffic committee to be brought up in the next monthly meeting to be held July 21st. Mitigation measures, if any, will be discussed in light of the upcoming trailhead project. Herriman Police Department will be in attendance in that meeting to ensure a*

Concern #2. At the meeting last night someone from the city said that Blackridge was a complete disaster from the design perspective and it baffles me that this plan would be pushed to the planning commission on July 16th without any concrete plans for public safety setting up for you to have another complete disaster for the community. $500K for a gravel parking lot is a quite a bit of money to spend on another potential disaster. Why not wait to send this to the planning commission until you have fully vetted out the public safety aspect, until the Herriman PD can address safety as far as children and property go, and until the traffic committee, which you made no secret you believe is the only one responsible for this issue, has the time to listen to the concerns and make recommendations to go in conjunction with your projects plan? What is the rush? When you rush a process like this, it makes people, including myself and my neighbors who I talked with last night, concerned that your priority is not our communities safety.

Response #2. *Your point is valid in that Herriman City does anticipate additional traffic volume as a result of a new trailhead. Where it is our understanding that many are currently using this*

precariously sloped area as a stop to access the hills and trails without a proper trailhead, it is worth noting that a safety concern exists today without installation of a new trailhead.

Concern #3. I would also like to bring a point up about safety that my husband mentioned last night. If I read your plans correctly and heard correctly last night, you are going to build up a retaining wall on the west side to keep people from going over the cliff into peoples backyards which seems like a must have. But it also seems to create an even more desirable place for people to congregate and drink. If the people below the wall can't see into the dark up into the parking lot (since there is no lighting at all minus a light on a bathroom that isn't even a guarantee based on your budget) to see what's going on, and you set the parking lot far enough back that the people across from it can't really see into it, how do you propose keeping people from driving in there at night, turning off their lights and drinking, smoking, or having sex? We already know that a few years back an older man was caught engaging in sexual activities with a minor at the end of the road. Luckily it was in front of Joe's house but if you create a dark and isolated place between boulders and a mountain do you not think you are setting yourself up to have similar issues? And then if they do drink and already have an inclination to speed down the hill, how do you propose keeping us safe from that? And even if the people living near by can see but refuse to call the cops because they are afraid of getting their house egged, which they publicly stated numerous times over the last two open houses, how do you plan to keep us safe from people engaging in drinking and the speeding down the hill? As you can see, public safety issues are abundant especially when you do not gate the parking lot at night have no lighting, and a likely not well disguised camera and last night I didn't even hear a firm commitment from the PD on additional patrols. Last open house it was their "hope" to do more but they hadn't even committed to it or what that would look like. You are exposing our community to a magnitude of issues without any solid plan on how to combat the safety concerns that have been raised. We may live in Utah but we are not immune to crime.

Concern #4. Chase, I look forward to chatting with you shortly about the potential liability issues this creates for not only the city but our families and your perspective on this. Bryce, I will start submitting traffic committee reports today as will my neighbor and we will do so everyday until a plan is in place. I would like the opportunity actually to address this myself with the traffic committee. I am by no means opposed to the project as a whole, however, I do think as someone who lives on this street and sees the speeding everyday throughout the day, it would be beneficial to have a member of the community help make the recommendations on how to keep our families safe from the traffic viewpoint. This could go a long way to put at ease people's fears, especially for those who are not as comfortable being as vocal as I am or are not as articulate as I am about their concerns. I would also like an opportunity to talk with the Police Chief on his concerns further as no one from the PD was there last night and I would like to hear what his plan is to keep our families and our property safe. My goal is not to stop this project but to find a middle ground where public safety is adequately addressed and a safe community area is created.

Email 2 (June 30, 2020 9:56 AM)

Concern #5. First, how do you propose keeping people out of there from setting off fireworks? We know that people in Herriman don't always listen to fire guidelines and some flat out think they don't apply to them, and we cannot be blind to the potential for people to illegally set off fireworks

like in Lehi. A huge secluded large gravel parking lot seems ideal for anyone who is to ignorant to recognize the fire hazard living up here or for negligent teenagers who are tryin to be cool. How do you currently police Yellow Fork for this issue and how can you ensure you will keep that area from burning the entire mountain down. *Chase I would entertain something here from your or someone else but I don't think we are ready to make any such guarantee.*

Concern #6. Secondly, at the first open house one of my main concerns was property values. I was almost mocked at the suggestion that this would decrease the value of my property because of all the amazing amenities you were providing. Now that you have stripped the amenities out and made it an excessive 66 stall gravel parking lot, how can you say it increases the value? You are giving us more issues and hazards without any of the amenities you promised would help property values. I understand the need for a small parking area to keep people of the streets, but 66 is excessive, and puts more undue risk on our families and doesn't increase our property value because we already have access to the trail without the parking area. $500K can surely be used to help the community in far more ways with COVID than building a gravel parking lot that. Can you not scale it down to a 20 stall parking area and reallocate that money to a food bank, expanding the community garden program, tutoring program for the community, or even saved incase there is a budget shortfall because of COVID? Of course these are all points I will bring up with the Planning Commission and City Council but still worth expressing as they are valid concerns.

Response #3. *It is our understanding that this area is often frequented by trail users who park at the end of the Wide Hollow Dr. to access the trails or to explore. In some cases, they will even attempt to drive and turn around on the dirt path that resides precariously above nearby residents' homes. As a result, one of the priorities of this project is to provide a more safe location to park and access the nearby trails and minimize the parking on Wide Hollow Dr., which is often resident driveways. Although we anticipate this project will be an overall asset to the community, Herriman City does not know how it will affect the real estate value of nearby properties.*

Email 3 Re: Suggestions for Traffic Committee (Thursday, July 2, 2020 at 3:26 PM)

Concern #7. Our first idea (and I get not a super original one but our most important one to consider) is a gate on a timer. I know a simple gate that someone has to manually open and close isn't an option as was explained at the first open house. And, I understand the logistical reasons behind it... ie, people getting stuck if you make it a dawn to dusk parking lot and having to have someone go up and down twice a day to open/close it. But could we not explore the idea of a gate that is on a clock that is set to open at say 6am which should be dawn in the summer and close at say 8pm which should be dusk in the summer and include a giant sign that says the parking area is open dawn to dusk but the gate closes no matter what at 8pm everyday? That would really help ease the concerns we have with drinking and driving up there and could eliminate the need for more than one light on the bathroom, if the bathroom is indeed included due to the budget. Sure, people could go walk in and drink, but I would think parking in front of someones house is as good of a deterrent to not walk in and drink when coupled with cameras as you could really get. It could also help the neighbors who live below it have more privacy and not have lights in their backyards all night. We aren't sure why a gate on a timer can't work. Is it a budget issue? Do they not exist? We would love just more

explanations on why this can't work as it may be a great win-win for everyone. Keeps people out at all hours of the night but you don't have to do the work of opening/closing it.

Concern #8. Second, I would like to see a speed limit change sign put on our street. People fly around the corner off of Spring Canyon and just continue the same rate of speed going up the hill and certainly just do whatever they please going down the hill. Maybe put one at the corner of the first court and Wide Hollow and one at Seely and Wide Hollow. I would also like to see children at play signs on the corner of Seely and Wide Hollow to remind people that this is an area with an abundance of children. I don't think this is necessarily just a Wide Hollow issue. For example yesterday around noon I was out for a walk and a kid under 10 on a motor cross bike and another kid under 10 driving an even younger child in a really short to the ground sand dune buggy were racing up and down Wide Hollow and around the neighborhood. A large construction truck could not have seen the kids in the sand dune buggy at all normally let alone with how fast they were going. I think they should frankly go in up and down Spring Canyon. I think those are certainly two simple ideas that could be evaluated.

Concern #9. Third, I would like more cameras put up. Currently we don't have a crime issue really up here and that includes package theft. Sure anyone could come up here and participate in crime but currently it seems like it doesn't happen probably because people don't have a random reason to come up here. You live here or you don't. You drive a construction truck or a city truck so you are up here or you don't. This isn't a through passage to any other area. But with a huge parking lot and trailhead you are inviting people who don't have a vested interest and perhaps any level of respect for the people who do live in the area up here. We moved from downtown Dallas and chose our house up in this enclave for the privacy and peacefulness of it and the reduced likelihood of crime. Coming from our experiences in a big city, we are worried with inviting anyone into our area like Draper does you are only increasing our chances of crime occurring by giving people a reason to come up here. It seems someone could say they were coming up here to use the trail but really be scoping out homes etc. Right now there is the set of cameras at the corner of Seely and Wide Hollow but no one knew for certain who they belonged to and if they were even live at the first open house. In addition to knowing who owns them and how to access them, we would like to see more than a camera in a birds nest up there so there are multiple options of not only deterring crime, but catching anyone who commits it.

Concern #10. Finally, and this isn't necessarily a suggestion but more of a question on why rush this project and put all the money into 66 parking stalls when we don't really know if its necessary. Our neighbor at the top of the hill even said the most she has seen there is 12 cars. Can you start with the 40, see what the use is, adjust traffic or security issues as needed, and then reevaluate the budget and need? This doesn't seem to be a Blackridge situation where you don't own the land to expand on. The land will be there no matter what so why put all your eggs into the parking lot? Why not build out the 43 stalls on the east side of the lot and see if you have the money to put in the stairs and bathroom. When you are talking about benefiting our neighborhood as far as property values go, I would think making sure you had money for what you said would elevate them would go in sooner rather than later. I like the idea of keeping it more natural looking but right now its just a gravel parking lot that causes more issues than provides benefits for people living up here.

Concern #11. I would love to hear some more creative ideas as y'all know what the realistic options are and I don't. I just want to make sure that the priorities of this project, as with any in our community, are safety/security of existing neighborhood, privacy of existing neighbors, and then the benefit of recreation. I'd also love for anyone who is interested to come out and see from our perspective what the concerns are first hand and not through an email chain or an open house where people who do not even live in the neighborhood or on Wide Hollow say its not important.

Concern #12. One last thing…If you are still moving forward with presenting this to the Planning Commission on the 16th, could someone lay out what the policies are in making a statement to the Planning Commission.

Email 4 (Friday, July 03, 2020 11:39 AM)

Concern #13. Jonathan this may be a question more suited for you, bu is it then my understanding then that you are still going to present this plan to the commission on the 16th before the traffic committee meets? I will certainly prepare a comment if so, but if its going to be pushed back to try to work in some security/safety plans I would prefer to wait to make a comment, and hoping no comment will need to be made at all.

Concern #14. Also, I have reached out to my City Council representative about the concerns I have with the project and we are hoping to meet next week. I would love it if any of you would be able to join us. Email is certainly a convenient tool, however, a collaborative meeting may be more fruitful.

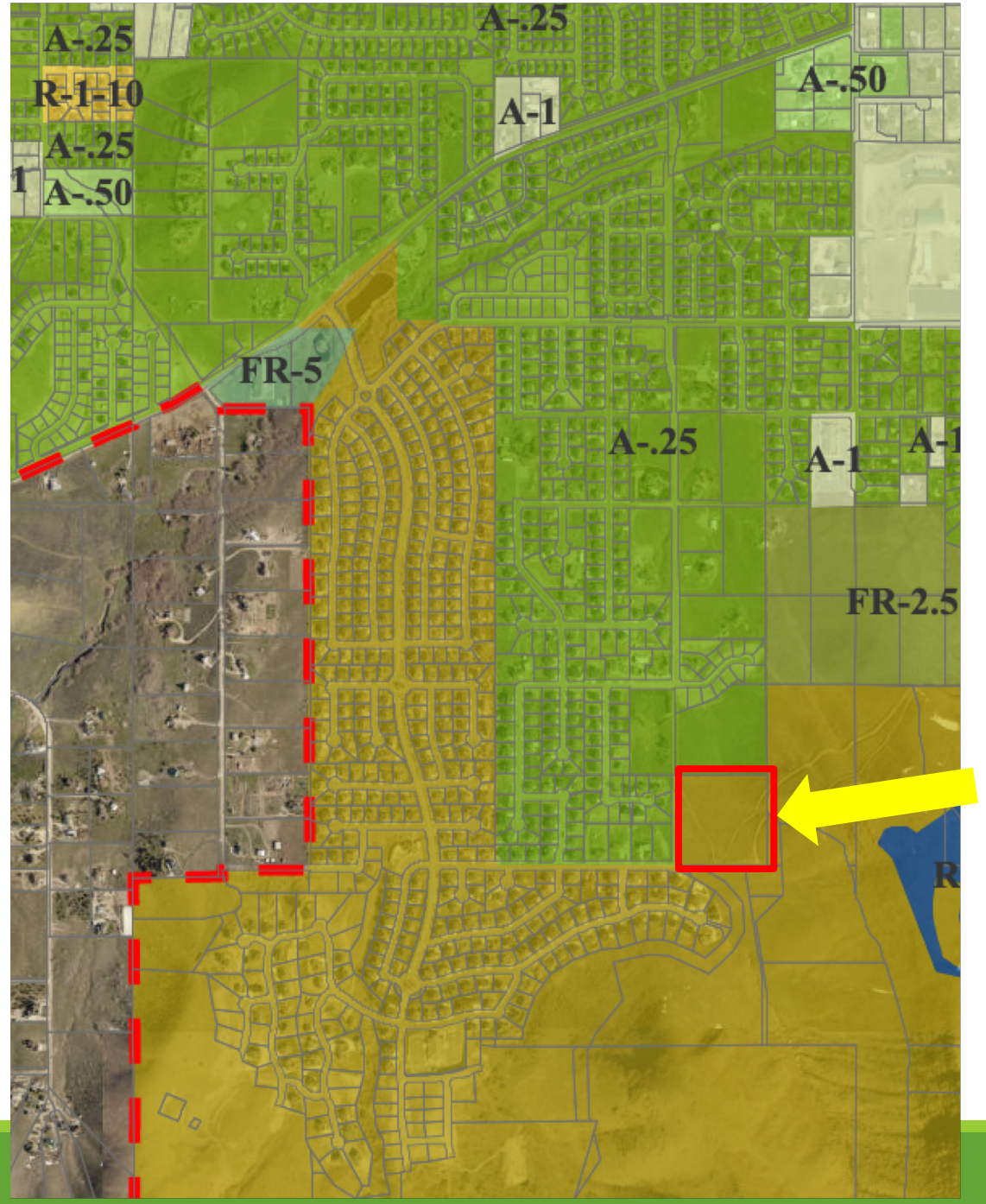

Item 3.1

Request: Conditional use for the Wide Hollow Trailhead

Applicant: Herriman City
Address: 14755 S 6600 West
Zone: FR-1 (Forestry Recreation)
Acres: 11
File Number: C2019-086

Process

- A conditional use is an administrative decision.
- The Planning Commission holds a public meeting and makes a decision based on compliance with the applicable ordinances and standards.
- Neighborhood meetings were held on November 12, 2019, and June 29, 2020.

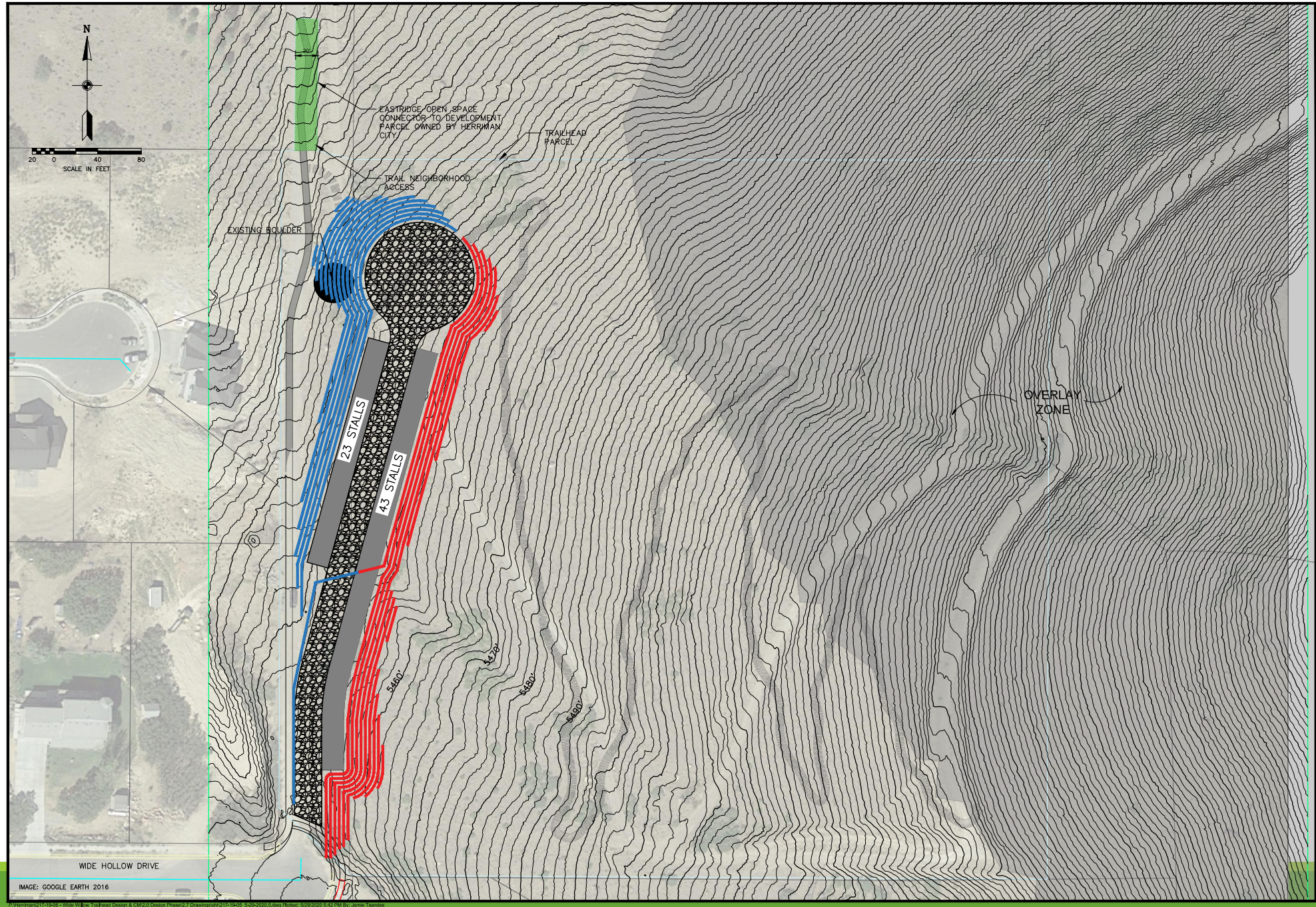

BOWEN COLLINS & ASSOCIATES

REVISIONS

NO.	DATE	REV. BY	DESCRIPTION

HERRIMAN CITY

WIDE HOLLOW TRAILHEAD

HERRIMAN, UTAH

VERIFY SCALE

BAR IS ONE INCH ON ORIGINAL DRAWING

REVIEW

CHECKED JKT

APPROVED JKT

DESIGN

DESIGN JKT

DRAWN JKT

LANDSCAPE

CONCEPT PLAN E

DATE: 10/23/2019

PROJECT NUMBER 217-19-05

DRAWING NO. L-01

SHEET 1 OF 1

P:\Herriman\217-19-06 - Wide Willow Trailhead Design & CM\2.0 Design Phase\2.7 Drawings\ahl\217-19-05_5-29-2020.5.dwg Plotted: 5/29/2020 5:42 PM By: Jamie Tsandes

Date of Meeting: 7/16/2020	
File #	C2020-040
Applicant	Herriman City
Address	5900 W 12200 South
Request	Conditional use for a pump track park to be located on the Midas Creek Trail Corridor

Staff Report

DATE: July 7, 2020
TO: Planning Commission
FROM: Bryn MacDonald, AICP, Assistant City Planner
MEETING: Planning Commission Meeting July 16, 2020
REQUEST: Conditional use permit for a pump track located on the Midas Creek Trail corridor

Applicant:	Herriman City
Address:	5900 W 12200 South
Zone:	R-2-10 (Medium Density Residential)
Acres:	0.17
File Number:	C2020-040

Request

Herriman City is requesting a conditional use permit for a pump track located on the Midas Creek Trail corridor.

Process

A conditional use is an administrative decision. The Planning Commission will hold a public meeting and make a decision based on compliance with the approval standards.

Notices

Notices are not sent for conditional uses.

Discussion

The City is proposing to construct a pump track as an amenity along the Midas Creek Trail. It is a prefabricated pump track made on a wood frame with a composite covering. Parking will be accommodated on Mustang Trail Way and at the Big Bend Park.

A neighborhood meeting was held on June 29, 2020 (see attached comments). There were 4 residents in attendance who all had positive feedback about the project.

Recommendation

Staff recommends approval of the conditional use for the pump trail located on the Midas Creek Trail.

Attachments

A. Vicinity Map
B. Site Plan
C. Neighborhood meeting comments

Proposed location for the Midas Creek Pump Track

Midas Creek Trail Corridor

Big Bend Park

Mustang Trail Way

Tule Mountain Cv

Elena Canyon Cv

Bigbend Vista Dr

Yukon River Ln

Yukon Park Ln

Blue Creek Dr

Bigbend Park Dr

Mule Ears Ln

Anthem Park Blvd

Wall Arch Ln

Window Arch Ln

Parallel Arch Ln

Turret Arch Ln

Ore Cart Way

Herriman City

0 137.5 275 550 Feet

Path: C:\Users\hshegrud\Desktop\Heidi's Map.mxd 6/19/20

North

This page is the creative property of American Ramp Company. It cannot be copied or redistributed.

This page is the creative property of American Ramp Company. It cannot be copied or redistributed.

North

CALL BLUESTAKES @ 811 AT LEAST 48 HOURS PRIOR TO THE COMMENCEMENT OF ANY CONSTRUCTION.

Know what's below. Call before you dig.

BENCHMARK

NORTHEAST CORNER OF SECTION 26 TOWNSHIP 3 SOUTH, RANGE 2 WEST SALT LAKE BASE & MERIDIAN

ELEVATION = 4869.79'

GENERAL NOTES

1. ELEVATIONS HAVE BEEN TRUNCATED FOR CLARITY. XXX.XX REPRESENTS AN ELEVATION OF 4XXX.XX ON THESE PLANS.

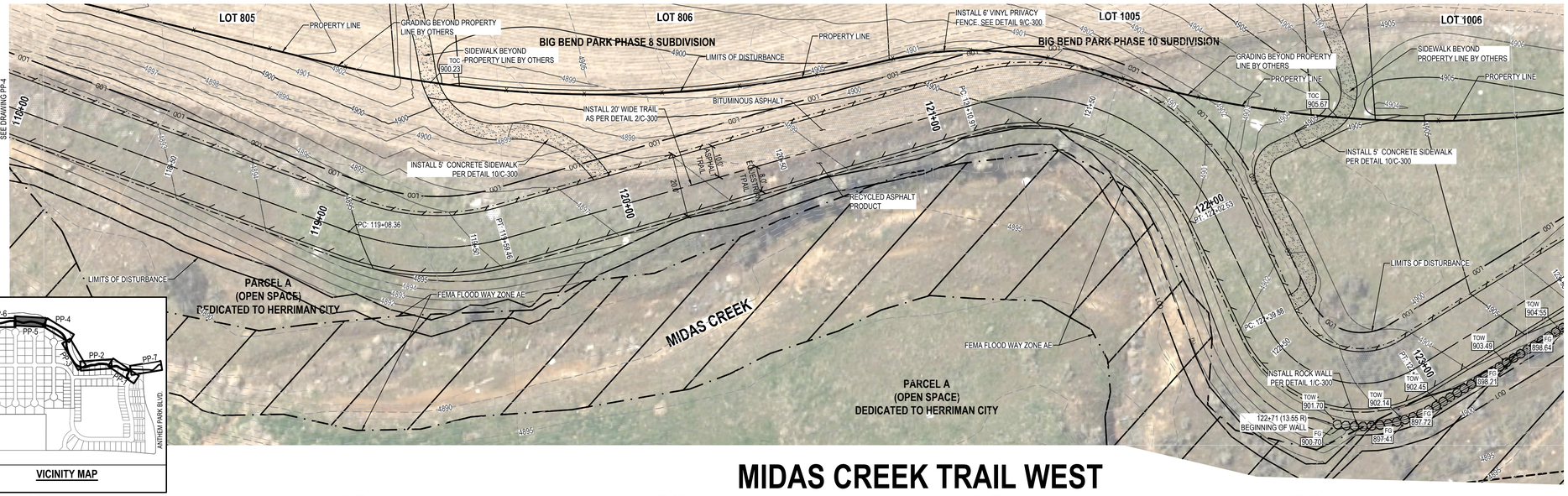

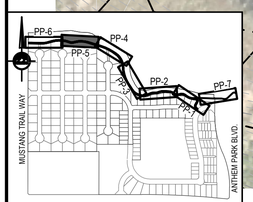

VICINITY MAP

MIDAS CREEK TRAIL WEST

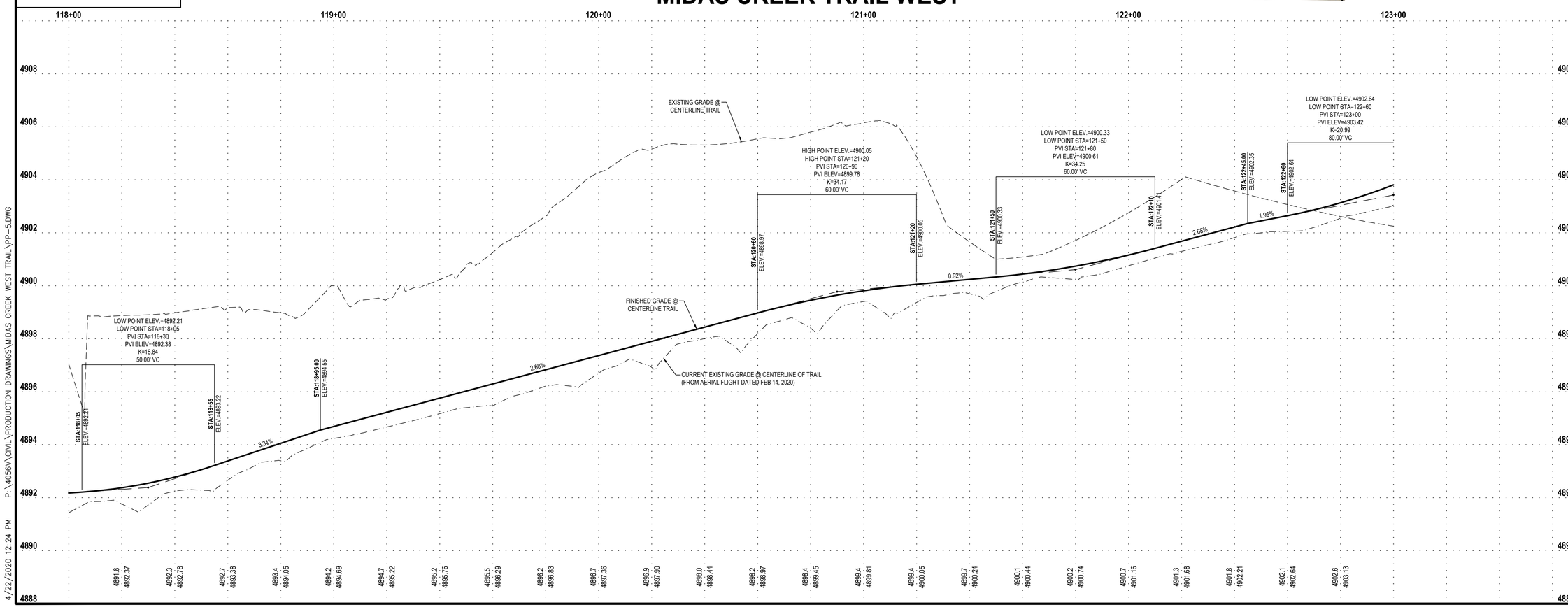

P:\4056V\CIVIL\PRODUCTION DRAWINGS\MIDAS CREEK WEST TRAIL\PP-5.DWG

4/22/2020 12:24 PM

ENSIGN
THE STANDARD IN ENGINEERING

SALT LAKE CITY
45 W. 10000 S., Suite 500
Sandy, UT 84070
Phone: 801.255.0529

WWW.ENSIGNENG.COM

ENSIGN JOB#: 4056V

NORTH

HORIZONTAL GRAPHIC SCALE

20 0 10 20 40

(IN FEET)
HORZ: 1 inch = 20 ft.
VERT: 1 inch = 2 ft.

NO.	REVISION DESCRIPTION	DATE
1	ADDENDUM	06-26-2019
2	TRAIL REALIGNMENT	04-07-2020

	TYPE	
SUBMITTAL	CDO	
DRAWN BY:	INITIALS	
CHECKED BY:	DN	
APPROVED BY:	DATE	
RELEASE:	4/22/20	
PLOT DATE:		

CALL BLUESTAKES @ 1-800-662-4111 AT LEAST 48 HOURS PRIOR TO THE COMMENCEMENT OF ANY CONSTRUCTION.

VERIFY SCALE

BAR IS ONE INCH ON ORIGINAL DRAWING

HERRIMAN CITY

HERRIMAN CITY
ENGINEERING DEPARTMENT
MIDAS CREEK WEST TRAIL
WEST OF ANTHEM PARK BOULEVARD

TRAIL PLAN AND PROFILE

PP-5

Midas Creek Pump Track

Description: The Midas Creek Pump Track is an amenity located along the Midas Creek Trail. It is a prefabricated pump tack made on a wood frame with a composite covering. Pump tracks are designed for flow once you get going to don't need to pedal your bike. This pump track is designed so all skill levels can have fun. We envision this to be a ride to amenity for users along the trail. Parking can be accommodated on Mustang Trail Way and at the Big Bend Park.

Neighborhood meetings

Date: June 29, 2020, 5:30-6 pm

How many people attended? 4

Comments and concerns collected from meeting:

- Comments and feedback regarding concept
  - Looks great, can't wait to ride it!
  - Looks like fun for all ages.
- What do you like?
  - I like that you are using your open space well and providing more amenities for Herriman Residents.
- Something you don\t like?
  - Not sure what the surfacing surrounding the pump track will be.
  - No shade.
- Any additional comments
  - Can my son and his friends help design the next one?
  - We want dirt jumps like Draper.
  - Asphalt Jumps would be awesome can you make some?

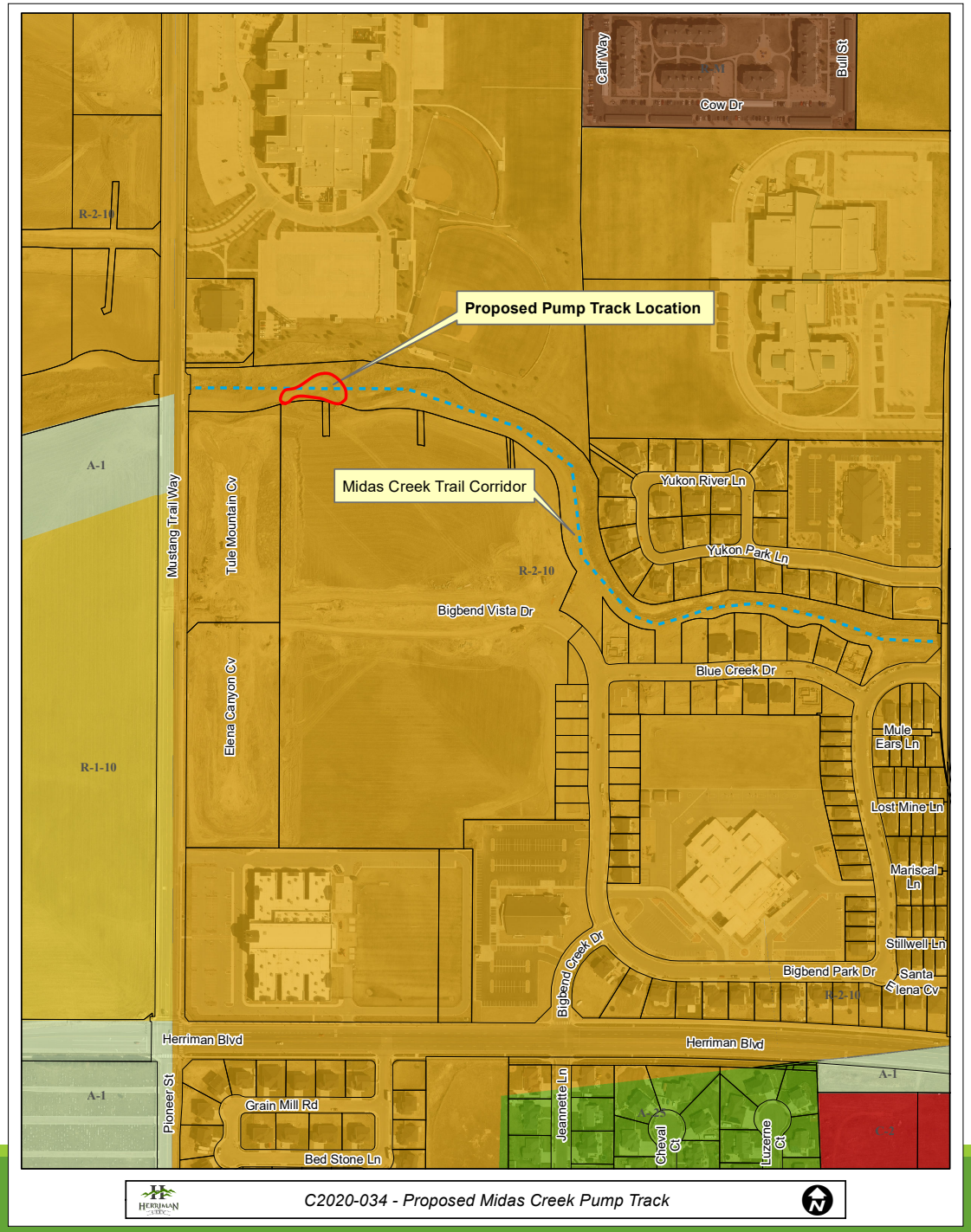

Item 3.2

Request: Conditional use permit for a pump track located on the Midas Creek Trail corridor

Applicant: Herriman City
Address: 5900 W 12200 South
Zone: R-1-10 (Medium Density Residential)
Acres: 0.17
File Number: C2020-040

Process

- A conditional use is an administrative decision.
- The Planning Commission holds a public meeting and makes a decision based on compliance with the applicable ordinances and standards.
- A neighborhood meeting was held on June 29, 2020.

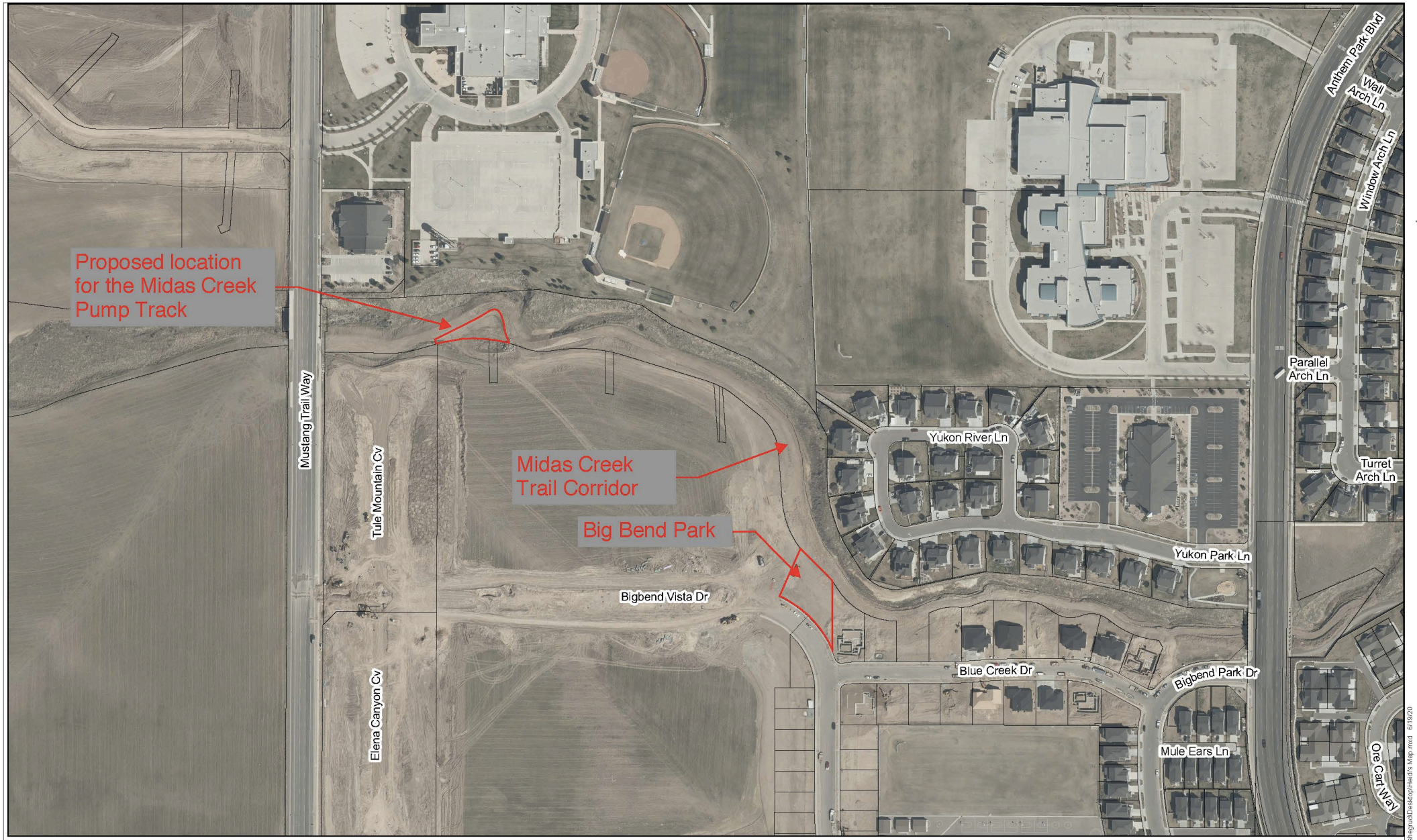

Herriman City

0 137.5 275 550 Feet

Path: C:\Users\hsegrud\Desktop\Heidi's Map.mxd 6/19/20

North

This page is the creative property of American Ramp Company. It cannot be copied or redistributed.

This page is the creative property of American Ramp Company. It cannot be copied or redistributed.

North

CALL BLUESTAKES @ 811 AT LEAST 48 HOURS PRIOR TO THE COMMENCEMENT OF ANY CONSTRUCTION.

BENCHMARK

NORTHEAST CORNER OF SECTION 26
TOWNSHIP 3 SOUTH, RANGE 2 WEST
SALT LAKE BASE & MERIDIAN

ELEVATION = 4869.79'

GENERAL NOTES

1. ELEVATIONS HAVE BEEN TRUNCATED FOR CLARITY. XXX.XX REPRESENTS AN ELEVATION OF 4XXX.XX ON THESE PLANS.

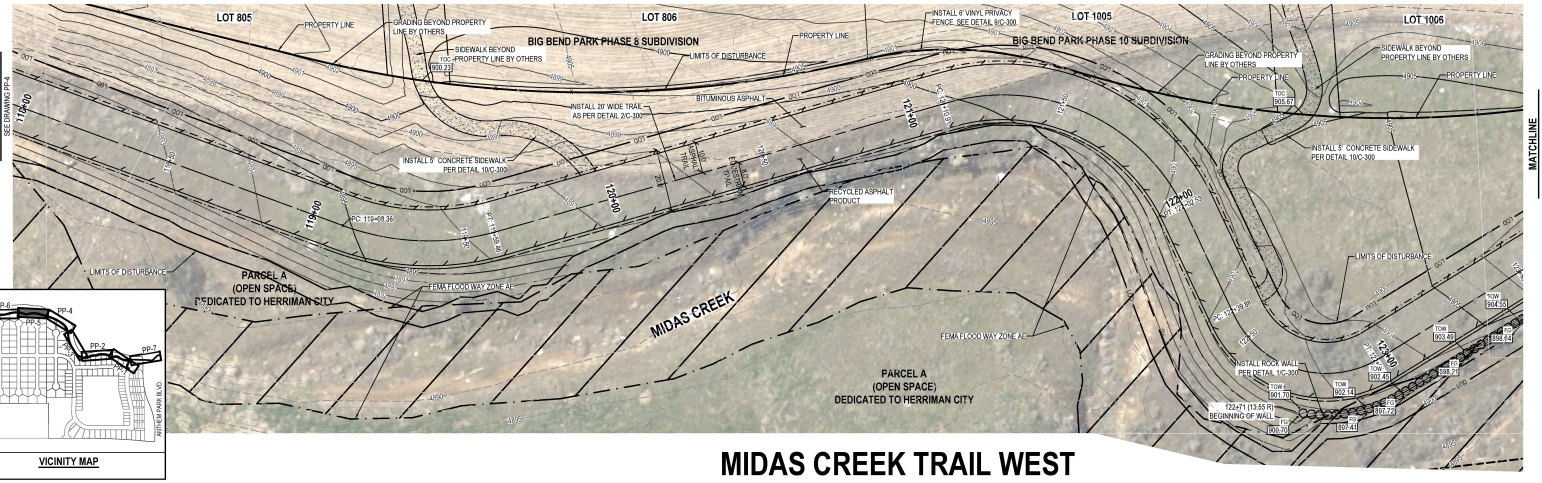

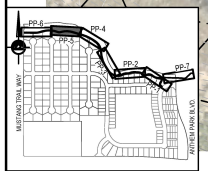

VICINITY MAP

MIDAS CREEK TRAIL WEST

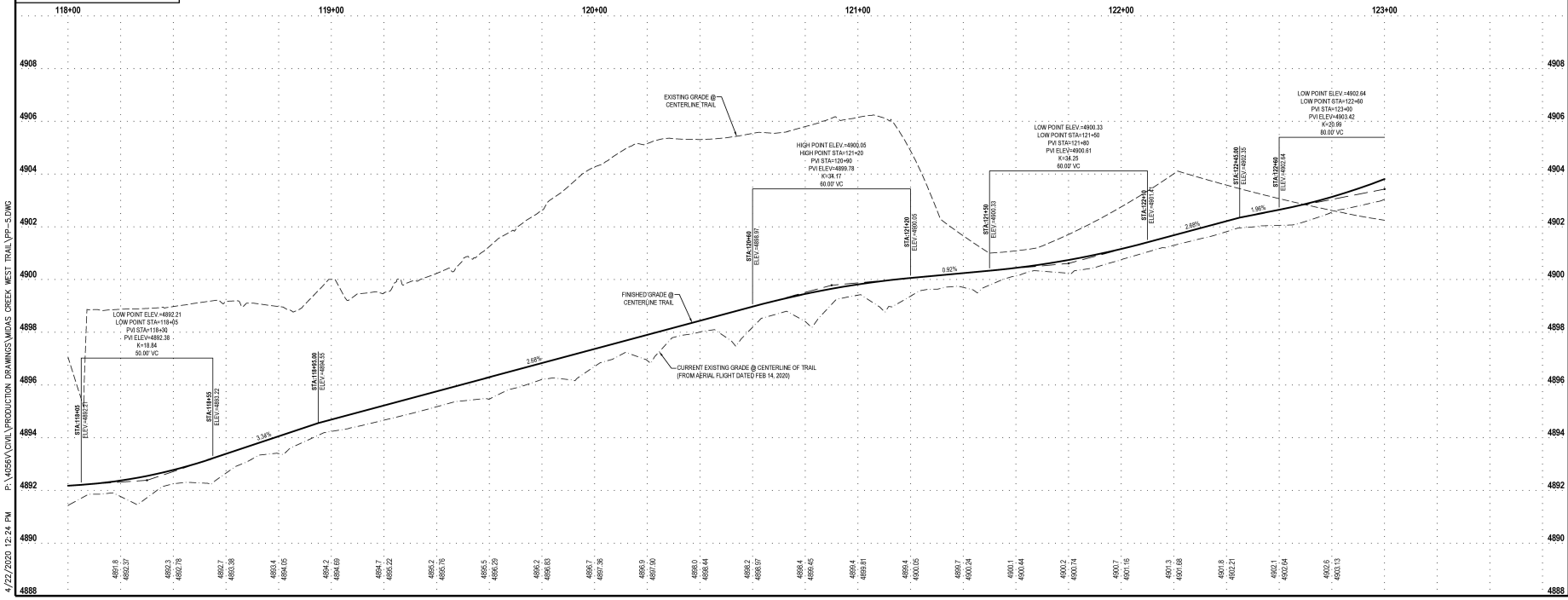

ENSIGN
THE STANDARD IN ENGINEERING

SALT LAKE CITY
45 W. 10000 S., Suite 500
Sandy, UT 84070
Phone: 801.255.0529

WWW.ENSIGNENG.COM
ENSIGN JOB#: 4056V

HORIZONTAL GRAPHIC SCALE
30 0 10 20 40
(IN FEET)
HORZ: 1 inch = 20 ft.
VERT: 1 inch = 2 ft.

NO.	REVISION DESCRIPTION	DATE
1	ADDENDUM	06-26-2019
2	TRAIL REALIGNMENT	04-07-2020

	TYPE
SUBMITTAL	CDD
DRAWN BY:	INITIALS
CHECKED BY:	
APPROVED BY:	DN
RELEASE:	DATE
PLOT DATE:	4/22/20

CALL BLUESTAKES @ 1-800-662-4111 AT LEAST 48 HOURS PRIOR TO THE COMMENCEMENT OF ANY CONSTRUCTION

VERIFY SCALE
BAR IS ONE INCH ON ORIGINAL DRAWING

HERRIMAN CITY

HERRIMAN CITY
ENGINEERING DEPARTMENT
MIDAS CREEK WEST TRAIL
WEST OF ANTHEM PARK BOULEVARD
TRAIL PLAN AND PROFILE

PP-5

P:\4056V\CIVIL\PRODUCTION DRAWINGS\MIDAS CREEK WEST TRAIL\PP-5.DWG
4/22/2020 12:24 PM

Date of Meeting: 7/16/2020	
File #	C2019-085-01
Applicant	Dave Murdock
Address	13338 S Rosecrest Road
Request	Conditional use amendment to the approved building elevations for Herriman Corners lot 7

Staff Report

DATE: July 7, 2020
TO: Planning Commission
FROM: Bryn MacDonald, AICP, Assistant City Planner
MEETING: Planning Commission Meeting July 16, 2020
REQUEST: Conditional use amendment to the approved building elevations allowing the installation of an awning attached to the north side of the existing building.

Applicant: Dave/Brad Murdock
Address: 13338 Rosecrest Road
Zone: C-2 (Commercial)
Acres: 1.188
File Number: C2019-085

Request
Conditional use for a site plan amendment allowing the installation of an awning attached to the north side of the existing building. The awning will provide cover for Tide Cleaner's drive-thru service.

Process
A conditional use is an administrative decision. The Planning Commission will hold a public meeting and make a decision based on compliance with the approval standards.

Notices
Notices are not sent for conditional uses.

Discussion
The original site plan was approved in October of 2019, along with building elevations for a five-tenant retail building. The owner is now asking to add an awning on the north end of the building. The proposed awning is approximately 684 square feet, constructed of steel and has a metal roof. The awning will be secured to the existing building and protrude 18 feet to the north and rest on steel columns. The installation of the awning will not conflict with any regulations set forth by title 10-12-7 of Herriman City Code.

Recommendation
Staff recommends approval of the conditional use amendment to the building elevations to allow for the installation of the drive-thru awning with the following requirements:

1. Receive a building permit prior to installation of the awning.

Attachments
A. Vicinity Map
B. Revised Site Plan
C. Proposed Building elevations

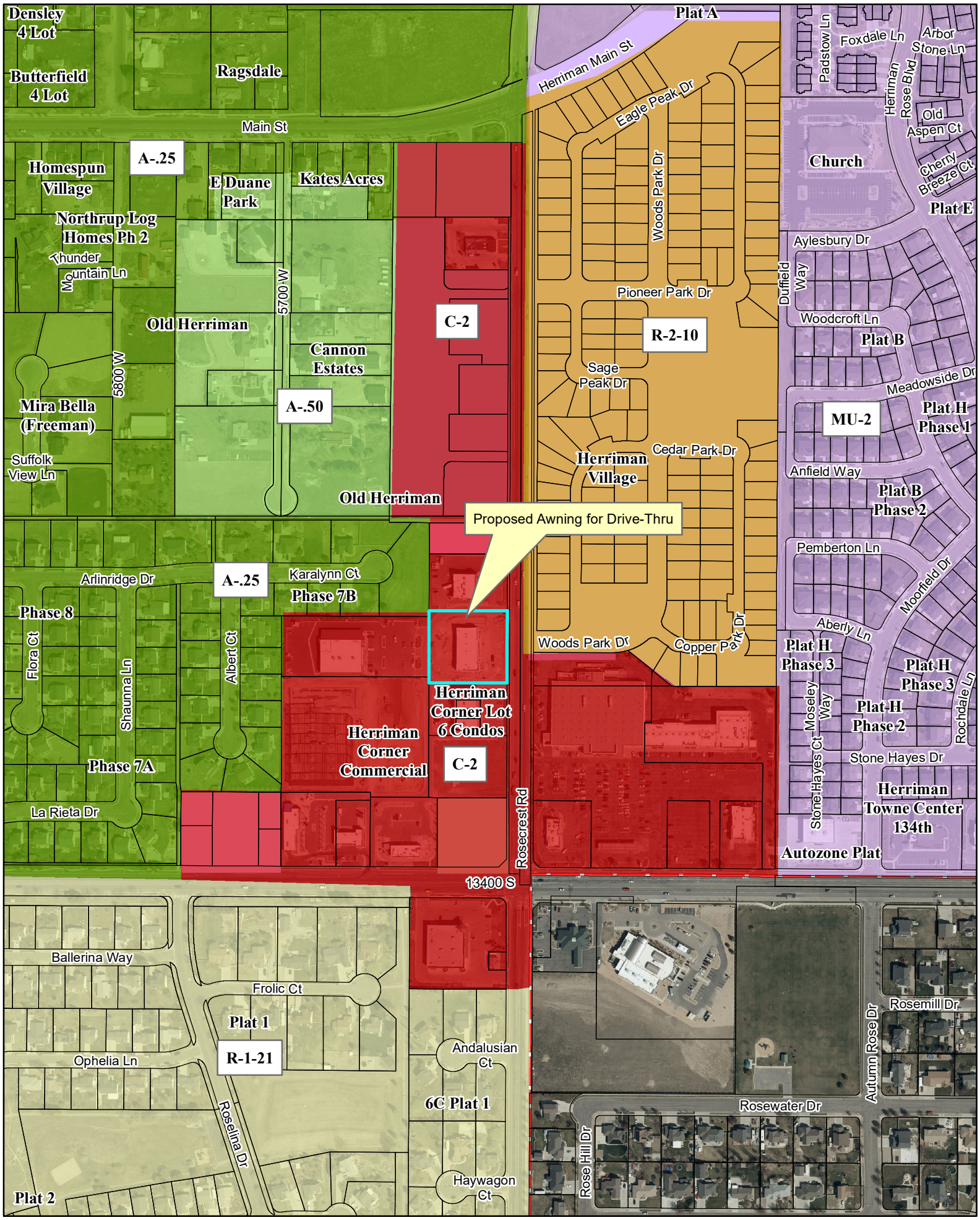
Densley 4 Lot
Butterfield 4 Lot
Ragsdale
Main St
Plat A
Herriman Main St
Eagle Peak Dr
Padstow Ln
Foxdale Ln
Arbor Stone Ln
Herriman Rose Blvd
Old Aspen Ct
Church
Cherry Breeze Ct
Plat E
Homespun Village
A-.25
E Duane Park
Kates Acres
Northrup Log Homes Ph 2
Thunder Mountain Ln
5700 W
Woods Park Dr
Aylesbury Dr
Duffield Way
Pioneer Park Dr
Woodcroft Ln
Plat B
Old Herriman
C-2
R-2-10
Cannon Estates
Sage Peak Dr
Meadowside Dr
5800 W
Mira Bella (Freeman)
A-.50
MU-2
Plat H Phase 1
Suffolk View Ln
Cedar Park Dr
Herriman Village
Anfield Way
Old Herriman
Plat B Phase 2
Proposed Awning for Drive-Thru
Pemberton Ln
Arlinridge Dr
A-.25
Karalynn Ct
Phase 7B
Moorfield Dr
Phase 8
Aberly Ln
Flora Ct
Shaunna Ln
Albert Ct
Woods Park Dr
Copper Park Dr
Plat H Phase 3
Plat H Phase 3
Herriman Corner Lot 6 Condos
Moseley Way
Plat H Phase 2
Rochdale Ln
Herriman Corner Commercial
C-2
Phase 7A
Stone Hayes Ct
Stone Hayes Dr
Herriman Towne Center 134th
La Rieta Dr
Rosecrest Rd
Autozone Plat
13400 S
Ballerina Way
Frolic Ct
Plat 1
R-1-21
Ophelia Ln
Andalusian Ct
6C Plat 1
Roselina Dr
Rosemill Dr
Autumn Rose Dr
Rosewater Dr
Rose Hill Dr
Haywagon Ct
Plat 2

8
13322
Phase 7B
Proposed Awning for Drive-Thru
Herriman
Corner
Commercial
7
13338
Woods
Park Dr
Rosecrest Rd
A
13348
Herriman Corner
Lot 6 Condos
B
13352
C
13354

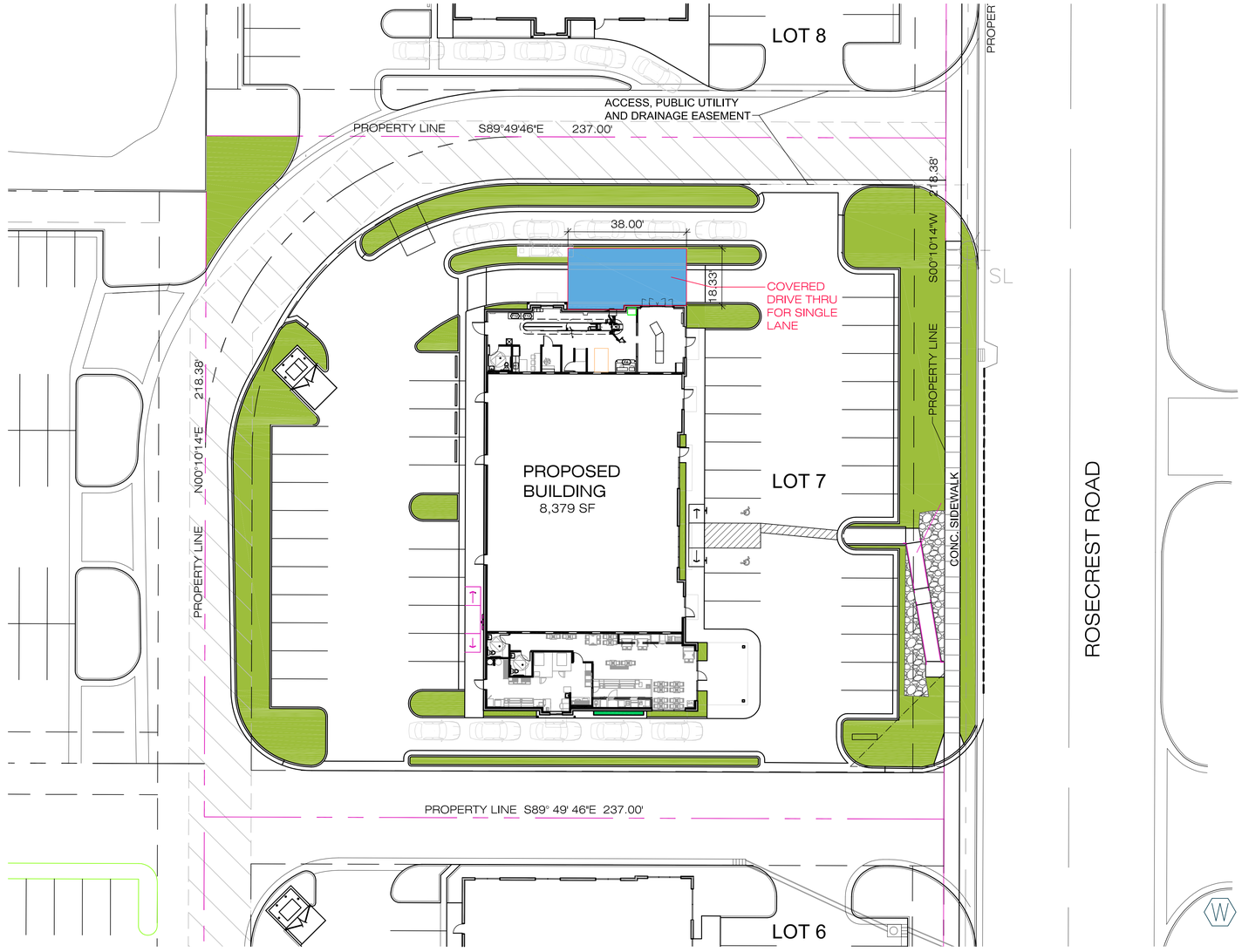

sba

SAMUEL J. BRADY

ARCHITECTS

200 E. South Temple
Suite 160
Salt Lake City, Utah 84111
(801) 595-1752
www.sambrady.com

STATE OF UTAH
SAMUEL J. BRADY
125666
LICENSED ARCHITECT

7/9/2020

13338 SOUTH
ROSECREST ROAD
LOT 7

HERRIMAN, UTAH

PROPOSED BUILDING

SITE PLAN

PAPER SIZE (11X17)
SCALE: 1" = 40'-0"

PAPER SIZE (24X36)
SCALE: 1" = 20'-0"

JULY 9, 2020
1936301SD1K.dwg

SD.3

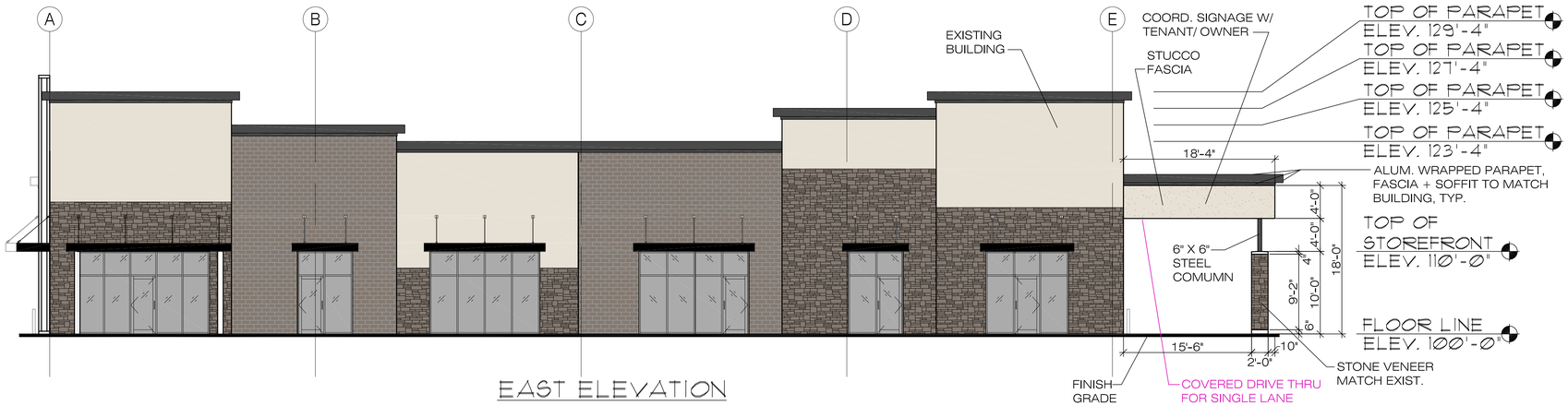

EAST ELEVATION

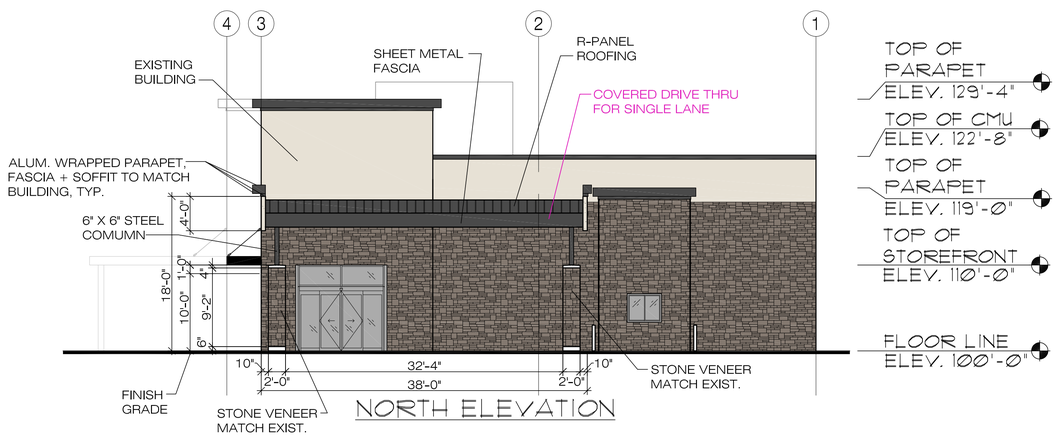

NORTH ELEVATION

NOTE:
OWNER TO OBTAIN A SEPARATE SIGN PERMIT FROM HERRIMAN CITY ZONING FOR ALL PROPOSED SIGNS. ALL SIGNAGE SHALL MEET THE REQUIREMENTS OF HERRIMAN CITY. SIGNAGE TO BE REVIEWED UNDER SEPARATE SUBMITTAL.

NOTE:
SIGNAGE SHALL BE REVIEWED UNDER A SEPARATE SIGN PERMIT APPLICATION.

EXTERIOR FENESTRATION NOTE
U-FACTOR FOR ALL WINDOWS/FENESTRATION TO BE DETERMINED IN ACCORDANCE WITH THE REQUIREMENTS OF THE NFRC 100, CERTIFIED BY AN INDEPENDENT LABORATORY, AND LABELED AS SUCH BY THE MANUFACTURER. THE STICKERS SHOULD BE LEFT ON THE WINDOWS UNTIL AFTER THEY HAVE BEEN INSPECTED, SITE BUILD FENESTRATION SHOULD BE PROVIDED WITH AN ONSITE CERTIFICATION THROUGH NFRC.
U-FACTOR: .29
SHGC RATING: .38
(SOLAR HEAT GAIN COEFFICIENT RATING)

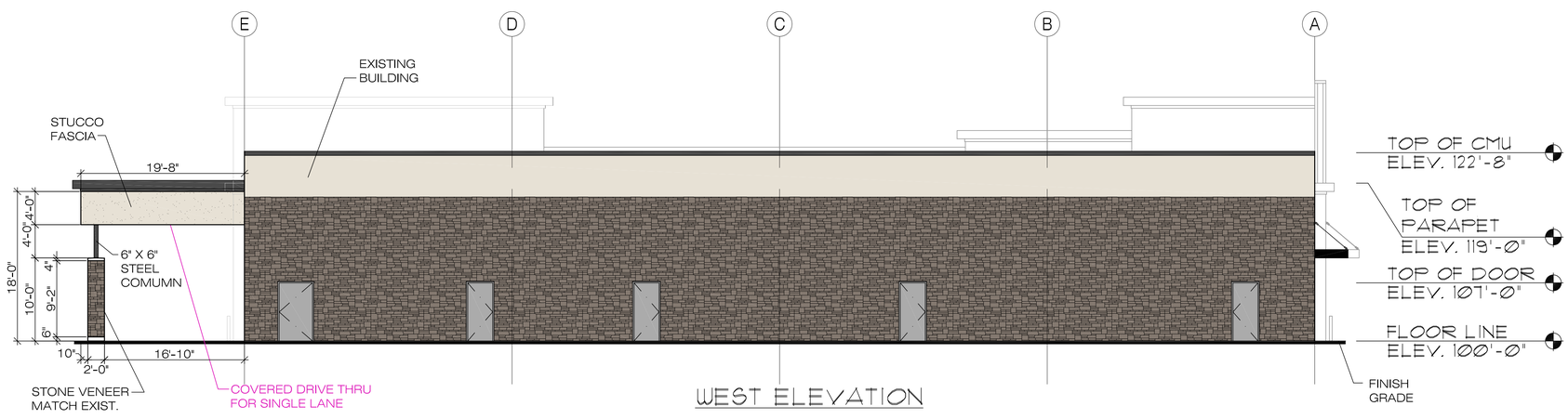

WEST ELEVATION

sba
SAMUEL J. BRADY
ARCHITECTS
200 E. South Temple
Suite 160
Salt Lake City, Utah 84111
(801) 595-1752
www.sambrady.com

STATE OF UTAH
SAMUEL J. BRADY
125666
LICENSED ARCHITECT

7/9/2020

13338 SOUTH
ROSECREST ROAD
LOT 7

HERRIMAN, UTAH

PROPOSED BUILDING

EXTERIOR ELEVATIONS

SCALE: 1/8" = 1'-0"
JULY 9, 2020
193630131KB.dwg

A3.1

TIDE CLEANERS DRIVE THRU COVER

HERRIMAN, UTAH

GENERAL STRUCTURAL NOTES

1. 2018 International Building Code Design Criteria (ASCE 7-16)

A. Total Roof Dead Load . . . . 8 psf
   Roof Dead Load . . . . 8 psf
   Roof Solar Panel Dead Load . . . . N.A.
B. Floor Dead Load . . . . N.A.
C. Roof Live Load . . . . 20 psf
D. Floor Live Load . . . . N.A.
E. Roof Snow Load Data
   Ground Snow Load P_g . . . . 40.0 psf
   Flat-roof Snow Load P_f . . . . 35.0 psf
   Sloped Roof Snow Factor C_s 1.0
   Exposure Factor C_e 1.0
   Importance Factor I_s 1.0
   Thermal Factor C_t 1.2
F. Rainfall Intensity . . . . 1.5 inches per hour
G. Wind Design Data
   Basic Design Wind Speed V. . . . . 105 mph
   Allowable Stress Design Wind Speed V_{asd} . 81 mph
   Risk Category II
   Exposure C
H. Earthquake Design Data
   Risk Category II
   Importance Factor I_e 1.0
   Mapped Spectral Parameters
   S_s 1.033g
   S_1 . . . . 0.371g
   Site Class . . . . D
   Design Spectral Parameters
   S_{DS} 0.826g
   S_{D1} 0.477g
   Seismic Design Category . . . . D
   Transverse SFRS . . . . Existing Masonry Shear Wall Building
   Seismic Response Coefficient C_s 0.165W
   Response Modification Factor R . . . . . 5.0 as per ASCE 7 Table 12.2-1
   Longitudinal SFRS . . . . Existing Masonry Shear Wall Building & Steel Cantilevered Column
   Seismic Response Coefficient C_s 0.661W
   Response Modification Factor R . . . . . 1.25 as per ASCE 7 Table 12.2-1
   Analysis Procedure . . . . Equivalent Lateral Force Procedure
J. Frost Depth . . . . 2'-6"

2. Earthwork

A. Foundation Design Values (assumed)
   i. Allowable Soil Bearing Pressure – 1500 psf
   ii. Coefficient of Friction – 0.25
   iii. Passive Earth Pressure – 200 psf/ft of depth
B. Owner/Contractor shall retain a licensed geotechnical engineer to verify the design values listed in Section A. Contractor shall follow recommendations in soils report for subgrade preparation below footings and building pad.

3. Concrete and Reinforcement

A. Material Standards
   i. Concrete
      a. Footings: Exposure Classes F0, F1, S0, W0, C1
         f'c = 2500 p.s.i., max. w/cm ratio = 0.55
      b. Air content for Exposures F1-F3 must meet the requirements of Table 19.3.3.1 of ACI 318-14. Air-entraining admixtures shall conform to ASTM C260
      c. The cement type for Exposures S1-S3 must meet the requirements of Table 19.3.2.1 of ACI 318-14. Cement shall conform to ASTM C150
      d. Calcium Chloride admixture shall not be used in Exposures S2 and S3
      e. Normal weight aggregates – ASTM C33
      f. Cold weather concrete shall conform to ASTM C94, ACI 306R, & ACI 301.
         1. Adequate equipment shall be provided for heating concrete materials and protecting concrete during freezing or near-freezing weather.
         2. Frozen materials or materials containing ice shall not be used.
         3. Forms, fillers, and ground with which concrete is to come in contact shall be free from frost and ice.
         4. Concrete materials and production methods shall be selected so that the concrete temperature at delivery complies with the specified temperature limits.
      g. Warm weather concrete shall conform to ACI 305R, ACI 301, ACI 305.1.
         1. The maximum concrete temperature at the time of placement is 95°.
         2. Concrete materials and production methods shall be selected so that the concrete temperature at delivery complies with the specified temperature limits.
         3. Handling, placing, protection, and curing procedures shall limit concrete temperatures or water evaporation that could reduce strength, serviceability, and durability of the member of structure.
   ii. Reinforcing
      a. Rebar – ASTM A615 Grade 60 (Fy = 60 ksi)
      b. Welded wire – ASTM A1064
      c. Epoxy/Adhesive – Simpson SET-XP (ICC-ES ESR-2508), Hilti RE-500V3 (ICC-ES ELC-3814), or Dewalt Pure110+ (ICC-ES ESR-3298) unless noted otherwise in the drawings.
   iii. Anchor Rods/Bolts
      a. All anchor rods shall be cast-in-place headed anchor rods. Use of post-installed (epoxy, adhesive, expansion, screw, etc.) anchors is not allowed without written permission from MVE or unless specifically noted in the drawings.
      b. Steel column anchor rods/bolts – ASTM F1554 Grade 36 with ASTM A563 heavy hex nuts and hardened washers (unless noted otherwise)
      c. Wood framing anchors – ASTM A307 with A36 plate washers
      d. Headed stud anchors (HSA) – ASTM A108
      e. Deformed bar anchors (DBA) – ASTM A496
      f. Screw Anchors for jambs as indicated in the typical anchor rod schedule – Simpson Titen HD (ICC-ES ESR-2713), Hilti Kwik HUS-TZ (ICC-ES ESR-3027), or Dewalt Screwbolt+ (ICC-ES ESR-2526)
      g. Use of hooked anchor rods/bolts is limited under the ACI and the IBC. Headed anchor rods/bolts must be used where indicated in the details.
      h. The symbols ℄ A.R./℄ A.B. as shown in the drawings indicate the center line of the anchor rod/bolt pattern, not the center line of any individual anchor rod/bolt.
B. Detail reinforcing to comply with ACI 315 "Manual of Standard Practice for Detailing Reinforcing Concrete Structures" and the Concrete Reinforcing Steel Institute (CRSI) recommendations.
   i. Minimum clear concrete cover for reinforcement shall be as follows unless noted otherwise:
      a. Concrete cast directly against and permanently exposed to earth – 3"
      b. Concrete exposed to weather or earth:
         1. #5 bars or smaller – $1\frac{1}{2}$"
         2. #6 bars or larger – 2"
      c. Concrete not exposed to weather or in contact with the ground – $\frac{3}{4}$"
      d. Slabs on grade – as shown in details, $\frac{3}{4}$" min. from top of slabs not exposed to weather
   ii. Lap Splice Lengths (unless noted otherwise)
      a. f'c = 2500-3500 p.s.i.
         1. #6 and smaller – 36 bar diameters
         2. #7 and larger – 45 bar diameters
      b. f'c = 4000 p.s.i. or greater
         1. #6 and smaller – 29 bar diameters
         2. #7 and larger – 36 bar diameters
      c. Lap splice lengths may be decreased by 25% for slabs on grade and horizontal wall reinforcing.
      d. Increase lap splice lengths by 50% where epoxy coated bars are used.
   iii. Stagger splices in walls so that no two adjacent bars are spliced in the same location, unless shown otherwise.
   iv. Make all bars continuous around corners or provide corner bars of equal size and spacing.
   v. Vertical bars in walls, grade beams, and piers to terminate in footings with ACI standard hooks (12 bar diameters) to within 4" of the bottom of the footing unless noted otherwise.
   vi. Horizontal wall reinforcing shall terminate at the ends of walls with a 90 degree hook plus a 6 bar diameter extension, unless shown otherwise.
   vii. Horizontal wall reinforcing shall be continuous through construction and control joints.
   viii. Splices in horizontal reinforcement shall be staggered. Splices in two curtains (where used) shall not occur in the same location.
   ix. Use chairs or other support devices as required for proper clearance.
   x. Rebar hairpins shall be centered in slabs and shall be wire tied to the slab reinforcing (if any). Rebar hairpins shall be continuous through walls and piers; lap splices in hairpins may only occur in the floor slab unless noted otherwise.
   xi. Unless noted otherwise, openings in walls shall be reinforced with #5 bar on all sides of the opening. Reinforcing shall extend 24" min. past the edge of the opening. For one layer of wall reinforcing provide (1) #5 bar around openings, for two layers provide (2) #5 bars.
C. Control joints in slabs on grade are recommended to control cracking. See plans for control joint spacing and details.
D. Slabs and grade beams shall not have joints in a horizontal plane. All reinforcement shall be continuous through all construction joints.
E. Welding of rebar is not allowed unless specifically indicated in the drawings. All embedments, reinforcing, and dowels shall be securely tied to framework or to adjacent reinforcing prior to placement of the concrete. Tack welding of rebar joints in grade beams, walls, or cages is not allowed. Where welding of rebar is shown in the drawings, all rebar to be welded shall be ASTM A706 Grade 60.

4. Structural Steel

A. Material:
   i. Angles, Plates, and Channels: ASTM A36 (Fy = 36 k.s.i.)
   ii. Wide Flanges: ASTM A992 (Fy = 50 k.s.i.).
   iii. Tubes (HSS): ASTM A500, Grade B (Fy = 46 k.s.i.)
   iv. Pipes: ASTM A53, Grade B (Fy = 35 k.s.i.)
B. Fabrication and construction shall comply with the latest edition of the following Codes and Standards:
   i. American Institute of Steel Construction (AISC) "Specification for Structural Steel Buildings." (360-16)
   ii. AISC "Seismic Provisions for Structural Steel Buildings," including supplement No. 1 (341-16)
   iii. AISC "Code of Standard Practice."
   iv. RCSC "Specification for Structural Joints Using ASTM A325 or A490 Bolts."
   v. Steel Joist Institute (SJI), "Standard Specifications and Code of Standard Practice."
   vi. American Welding Society (AWS), Structural Welding Code (specific items do not apply when they conflict with the AISC requirements).
   vii. American Iron and Steel Institute (AISI), "Specification for the Design of Cold-Formed Steel Structural Members".
C. Welding:
   i. Certification of Welders: All shop and field welding shall be executed by AWS certified welders. Certification shall be considered current if dated within the past 12 months. Welders will be considered certified if they have been certified by AWS and their work records are current within every six month period thereafter as required by AWS. Certification and records must comply with AWS Standards. Certification and appropriate records must be provided to the inspector prior to beginning work.
   ii. Electrodes: E-70XX or as noted otherwise. E-60XX may be used for welding steel floor and roof decks.
   iii. Minimum Welds: All intersecting steel shapes which are not bolted shall be connected by a fillet weld all around, unless noted otherwise.
   iv. Welded reinforcing bars shall be ASTM A706 Grade 60.
D. Bolted Connections:
   i. Use ASTM A325N bolts for hot-rolled steel to steel (e.g. girder to column, rafter to column/cap plate, beam to beam, etc.) connections unless noted otherwise in the drawings. All connections shall conform to the RCSC "Specification for Structural Joints Using ASTM A325 or A490 Bolts".
   ii. A325 bolts shall be fully tightened to the "Snug Tight" condition in accordance with the RCSC Specification Section 8.1.
E. Provide full height web stiffener plates to each side of all beams bearing on top of columns. Plate thickness shall match the thickness of the beam web except that the thickness need not exceed $\frac{1}{4}$" unless noted otherwise on drawings.
F. All structural steel, except plates embedded in concrete or masonry, to have one coat (min.) of gray shop primer, 1.5 mil minimum thickness.
G. Cold Formed Girts & Purlins:
   i. All cold formed cees, zees, and eave struts shall be MBCI standard or equal.
   ii. All girt and purlin connection bolts shall be GR-5 or equal.
H. Use 26 gage roof and wall panels with trims as required.

5. Special Inspections

A. Special inspections, as required by Section 1705 of the IBC, shall be provided by an independent agency employed by the owner unless waived by the building official. The contractor shall coordinate and cooperate with the required inspections. Items requiring special inspection are:
   i. Steel Construction (AISC 360-16 Chapter N)
      a. Field welding (if any is used).
      b. High-strength bolts.

6. Miscellaneous

A. The project specifications are not superseded by the General Structural Notes. Notes and details on the drawings shall take precedence over General Structural Notes and typical details. Should any of the detailed instructions shown on the plans conflict with the General Structural Notes, or with each other, the strictest provisions shall govern.
B. It is solely the responsibility of each contractor to follow all applicable safety codes and regulations during all phases of construction. The engineer is not engaged in, and does not supervise, construction.
C. Erection, Shoring, and Bracing
   i. It is the contractor's responsibility to determine erection procedures and sequence, and to ensure the stability of the building and its component parts during erection.
   ii. It is solely the contractor's responsibility to provide any temporary shoring, bracing, guys, and tie downs that may be necessary to provide adequate vertical and lateral support. Such material is not shown on the drawings. Shoring and bracing shall remain in place until all permanent members are in place and all final connections are completed, including all roof and floor attachments.
   iii. The building shall not be considered stable until all connections are complete.
   iv. The engineer has no expertise in, and takes no responsibility for, construction means and methods or job site safety during construction. Approval of submittals made by the contractor which may contain information related to construction methods or safety issues, or participation in meetings where such issues might be discussed, shall not be construed as voluntary assumption by the engineer of any responsibility for safety procedures.
D. Equipment framing loads, openings, and structure in any way related to mechanical, plumbing, or electrical requirements are shown for bidding purposes only. The contractor shall coordinate this information with the involved trades before proceeding with such portion of the work. Excess cost related to variation in these requirements shall be borne by the appropriate contractor.
E. The contractor shall notify engineer of any variations in dimensions.
F. The engineer is not responsible for any deviations from these plans unless such changes are authorized in writing by the engineer.

DRAWING	INDEX OF DRAWINGS
S0.1	GENERAL STRUCTURAL NOTES
S1.1	FOUNDATION & ANCHOR BOLT PLAN
S2.1	STRUCTURAL DETAILS

MOUNTAIN VIEW ENGINEERING, INC.
Structural Engineering · Consulting · Design
345 North Main Street Ste. A, Brigham City, Utah 84302 (435) 734-9700 Fax (435) 734-9519

SHEET TITLE: GENERAL STRUCTURAL NOTES
JOB NAME: TIDE CLEANERS DRIVE THRU VALET COVER
LOCATION: HERRIMAN, UTAH
CONTRACTOR: -

PLAN ISSUE DATES

	DATE:	BY:	DESCRIPTION:
△	5-27-20	J.S.	FOR PERMIT
△			
△			
△			
△			

MAY 27 2020

SHEET NUMBER: **S0.1**

DRAWN BY:	J.SCOTT
ENGINEER:	B.WALLACE
MVE JOB NUMBER:	200536

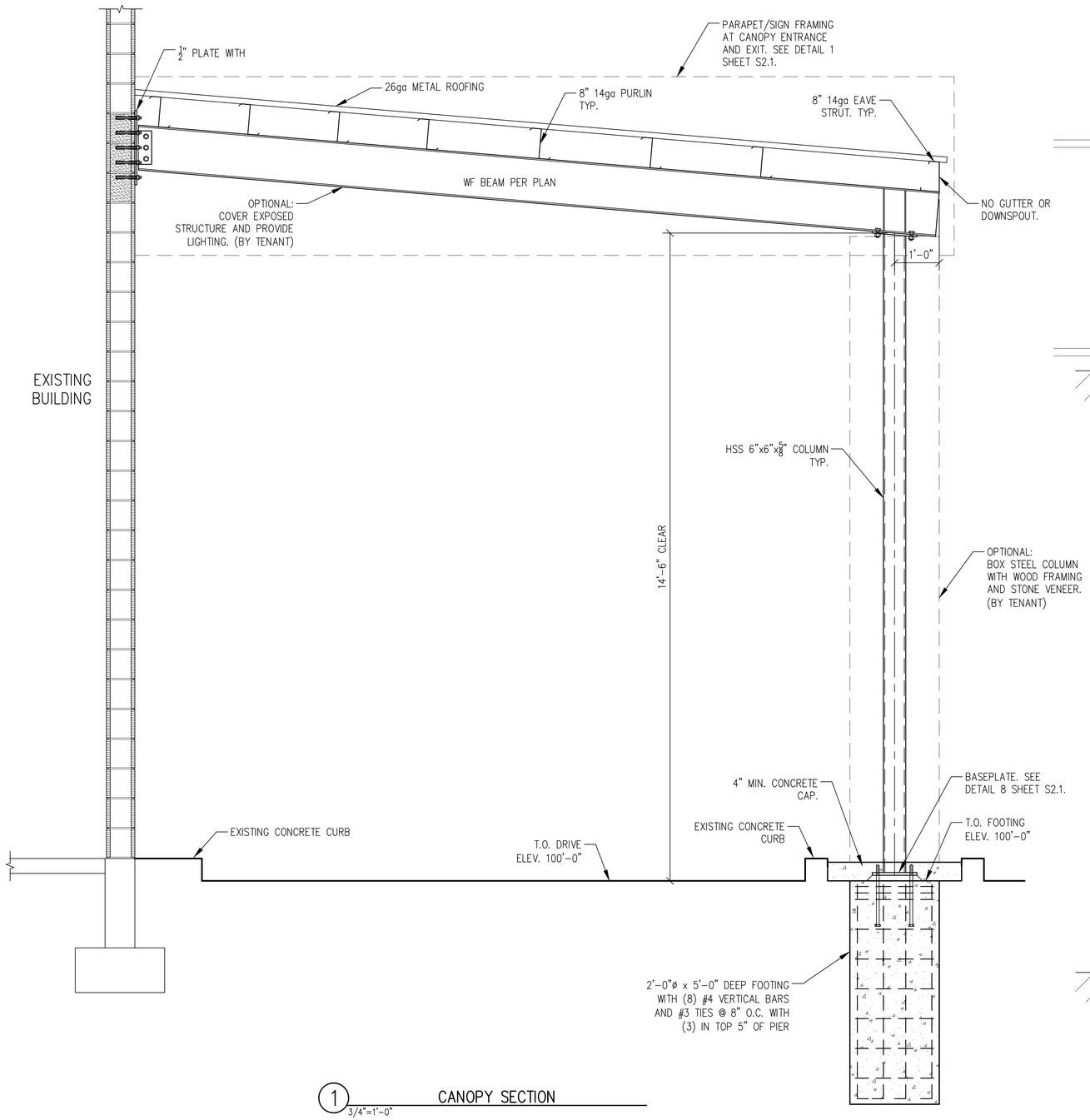

1 CANOPY SECTION
3/4"=1'-0"

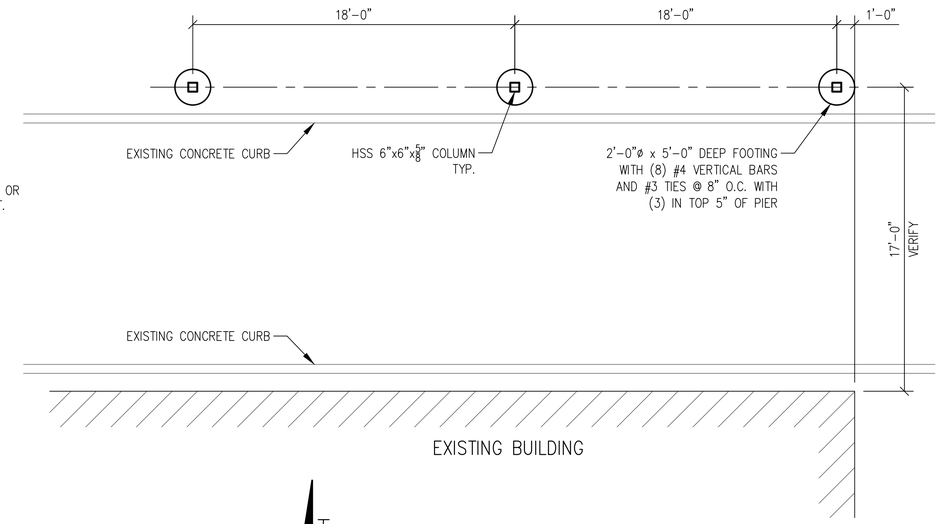

NORTH

FOUNDATION PLAN
SCALE: 1/4" = 1'-0"

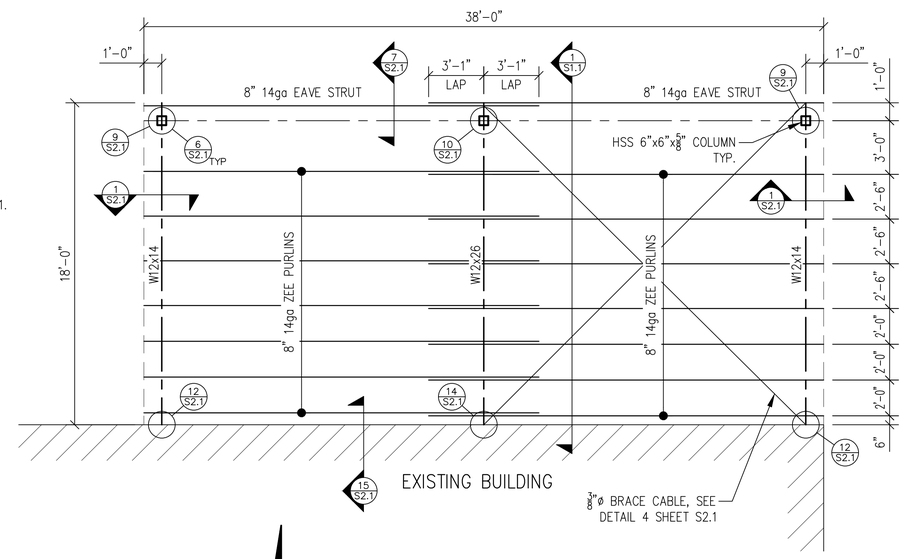

NORTH

ROOF FRAMING PLAN
SCALE: 1/4" = 1'-0"

MOUNTAIN VIEW ENGINEERING, INC.
Structural Engineering Consulting Design
345 North Main Street Ste. A, Brigham City, Utah 84302 (435) 734-9700 Fax (435) 734-9519

SHEET TITLE: FOUNDATION PLAN
JOB NAME: TIDE CLEANERS DRIVE THRU VALET COVER
LOCATION: HERRIMAN, UTAH
CONTRACTOR: -

PLAN ISSUE DATES

	DATE:	BY:	DESCRIPTION:
△	5-27-20	J.S.	FOR PERMIT
△			
△			
△			
△			

STRUCTURAL ENGINEER — PROFESSIONAL — No. 3417203 — BRAD WALLACE — STATE OF UTAH

MAY 27 2020

SHEET NUMBER:
S1.1

DRAWN BY:	J.SCOTT
ENGINEER:	B.WALLACE
MVE JOB NUMBER:	200536

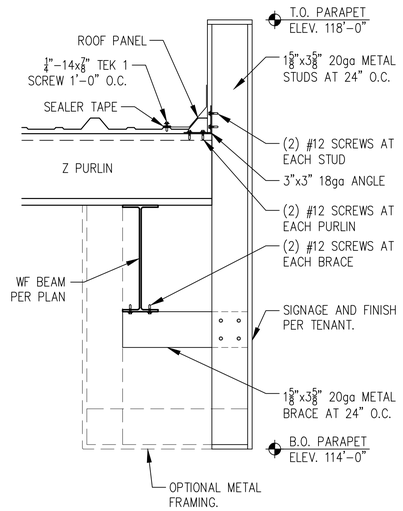

1 RAKE DETAIL
1 1/2"=1'-0"

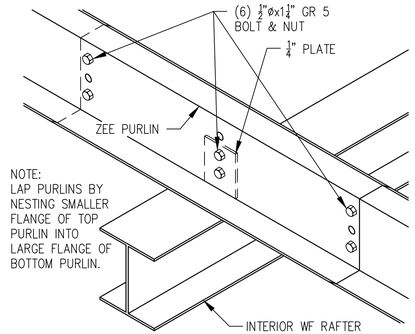

2 Z PURLIN TO RAFTER
1 1/2"=1'-0"

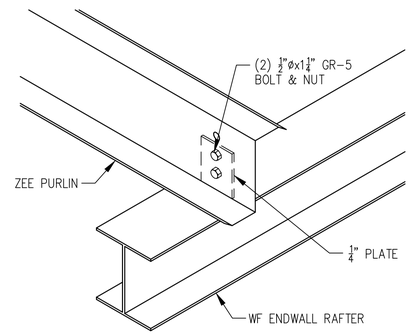

3 Z PURLIN TO ENDWALL RAFTER
1 1/2"=1'-0"

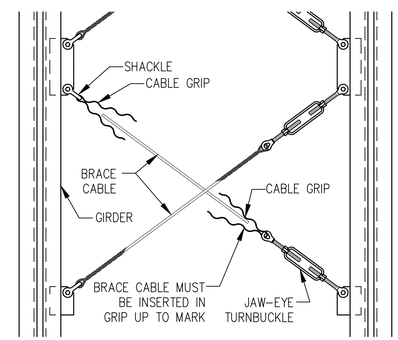

4 BRACE CABLE CONNECTION TO GIRDER
N.T.S.

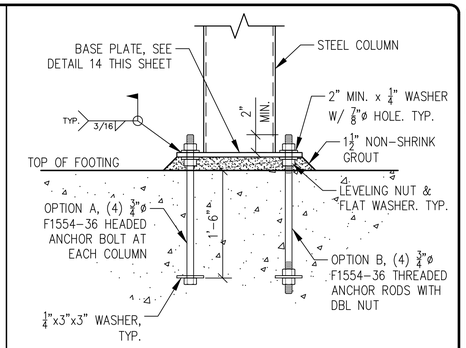

5 TYPICAL COLUMN BASE DETAIL
1 1/2"=1'-0"

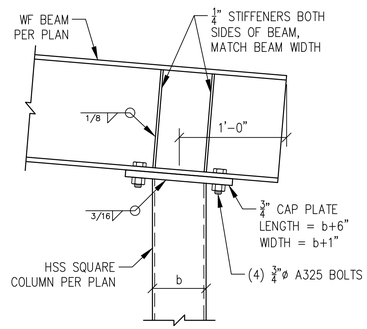

6 COLUMN CAP DETAIL
1 1/2"=1'-0"

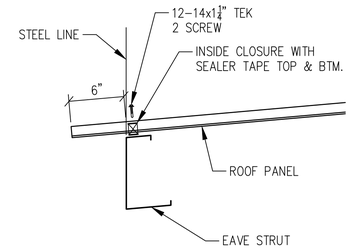

7 EAVE DETAIL
1 1/2"=1'-0"

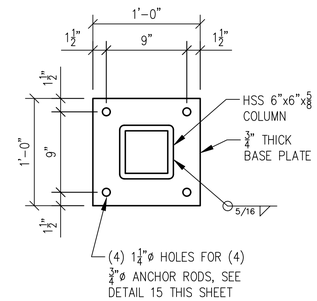

8 COLUMN BASE PLATE
N.T.S.

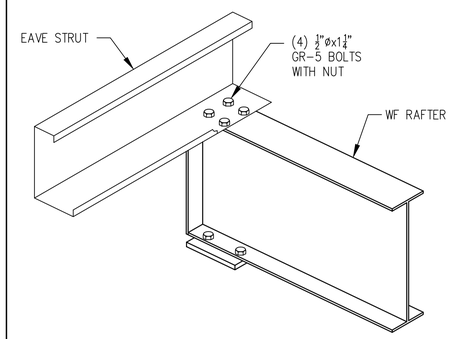

9 EAVE STRUT TO ENDWALL RAFTER
1 1/2"=1'-0"

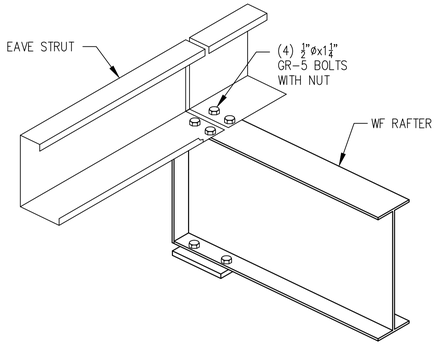

10 EAVE STRUT TO RAFTER
1 1/2"=1'-0"

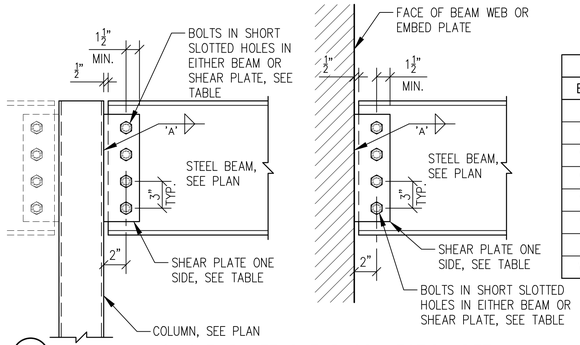

SINGLE-PLATE SHEAR CONNECTIONS			
BEAM	PLATE	BOLTS	WELD 'A'
W8	1/4"x4"x5 1/2"	(2) 3/4"ø A325	3/16"
W10	1/4"x4"x5 1/2"	(2) 3/4"ø A325	3/16"
W12	1/4"x4"x8 1/2"	(3) 3/4"ø A325	3/16"
W14	3/8"x4"x9"	(3) 7/8"ø A325	1/4"
W16	3/8"x4"x12"	(4) 7/8"ø A325	1/4"
W18	3/8"x4"x15"	(5) 7/8"ø A325	1/4"
W21	1/2"x4"x18"	(6) 7/8"ø A325	5/16"
W24	1/2"x4"x21"	(7) 7/8"ø A325	5/16"

11 SINGLE-PLATE SHEAR CONNECTION DETAIL
1 1/2"=1'-0"

12 BEAM CONNECTION DETAIL
1 1/2"=1'-0"

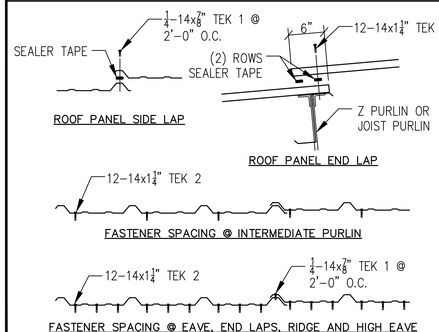

13 ROOF PBR PANEL FASTENER SPACING
N.T.S.

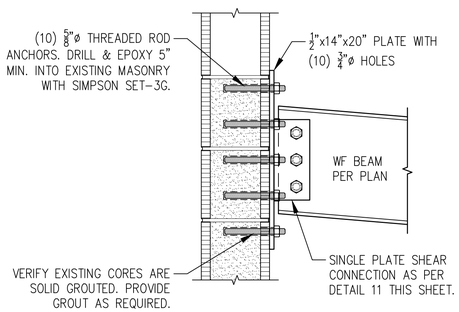

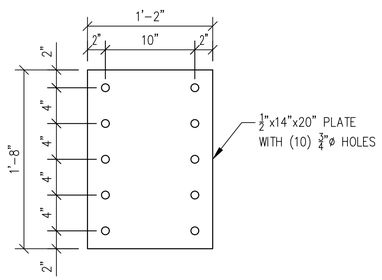

14 BEAM CONNECTION DETAIL
1 1/2"=1'-0"

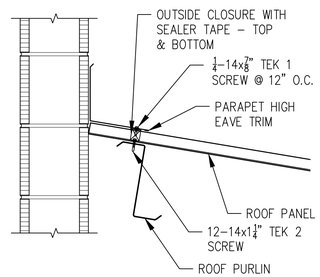

15 PARAPET EAVE TRIM DETAIL
1 1/2"=1'-0"

MOUNTAIN VIEW ENGINEERING, INC.
Structural Engineering Consulting Design
345 North Main Street Ste. A, Brigham City, Utah 84302 (435) 734-9700 Fax (435) 734-9519

SHEET TITLE: ERECTION DETAILS
JOB NAME: TIDE CLEANERS DRIVE THRU VALET COVER
LOCATION: HERRIMAN, UTAH
CONTRACTOR: -

PLAN ISSUE DATES

△	DATE:	BY:	DESCRIPTION:
	5-27-20	J.S.	FOR PERMIT
△			
△			
△			
△			

MAY 27 2020

SHEET NUMBER:
S2.1

DRAWN BY:	J.SCOTT
ENGINEER:	B.WALLACE
MVE JOB NUMBER:	200536

de
ners
Genie
GTH-844

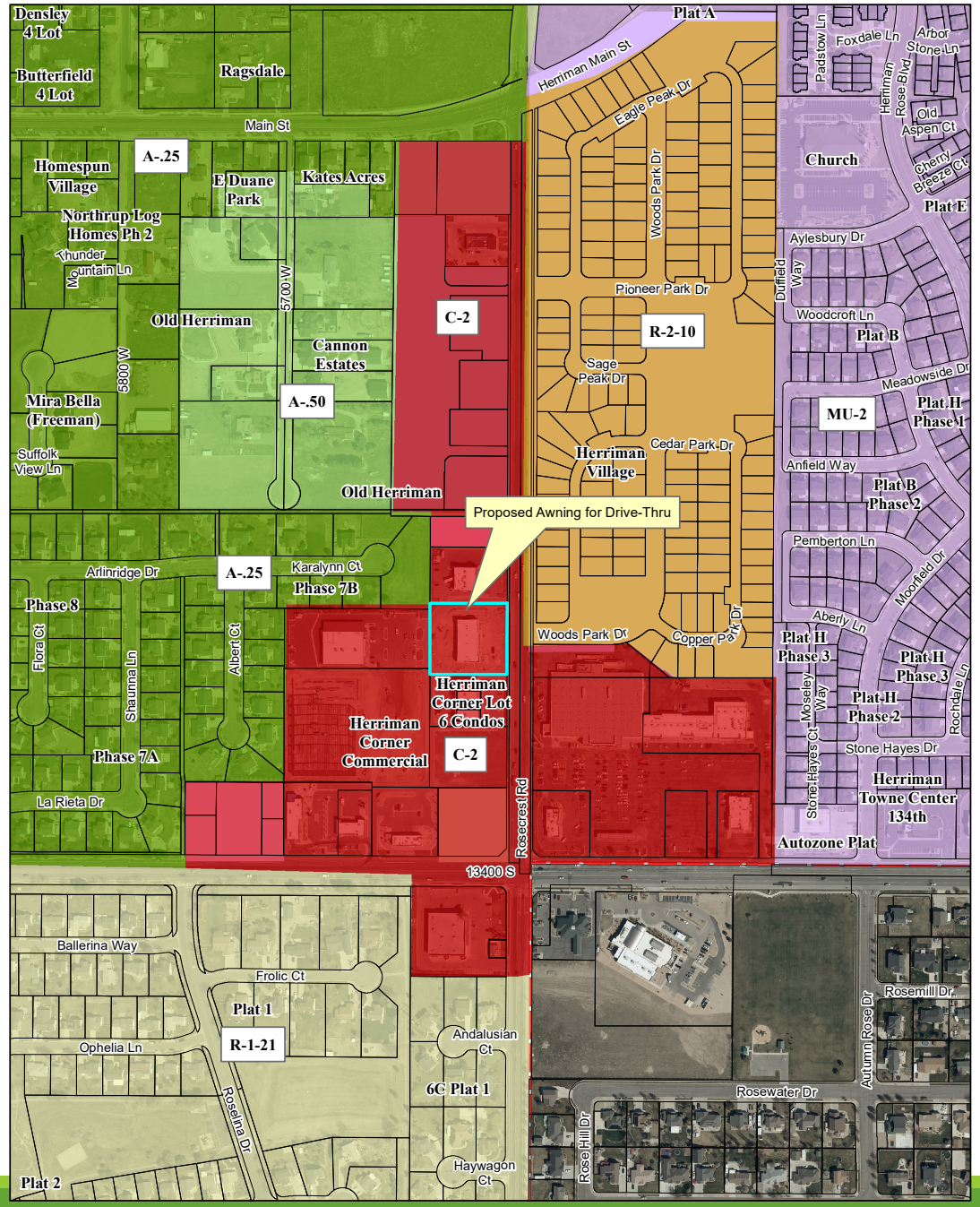

C2019-085-01 - Site Plan Amendment for Awning

Item 3.3

Request: Conditional Use amendment to the approved building elevations for Herriman Corners lot 7

Applicant: Dave Murdock
Address: 13338 S Rosecrest Road
Zone: C-2 (Commercial)
Acres: 1.188
File Number: C2019-085-01

C2019-085-01 - Site Plan Amendment for Awning

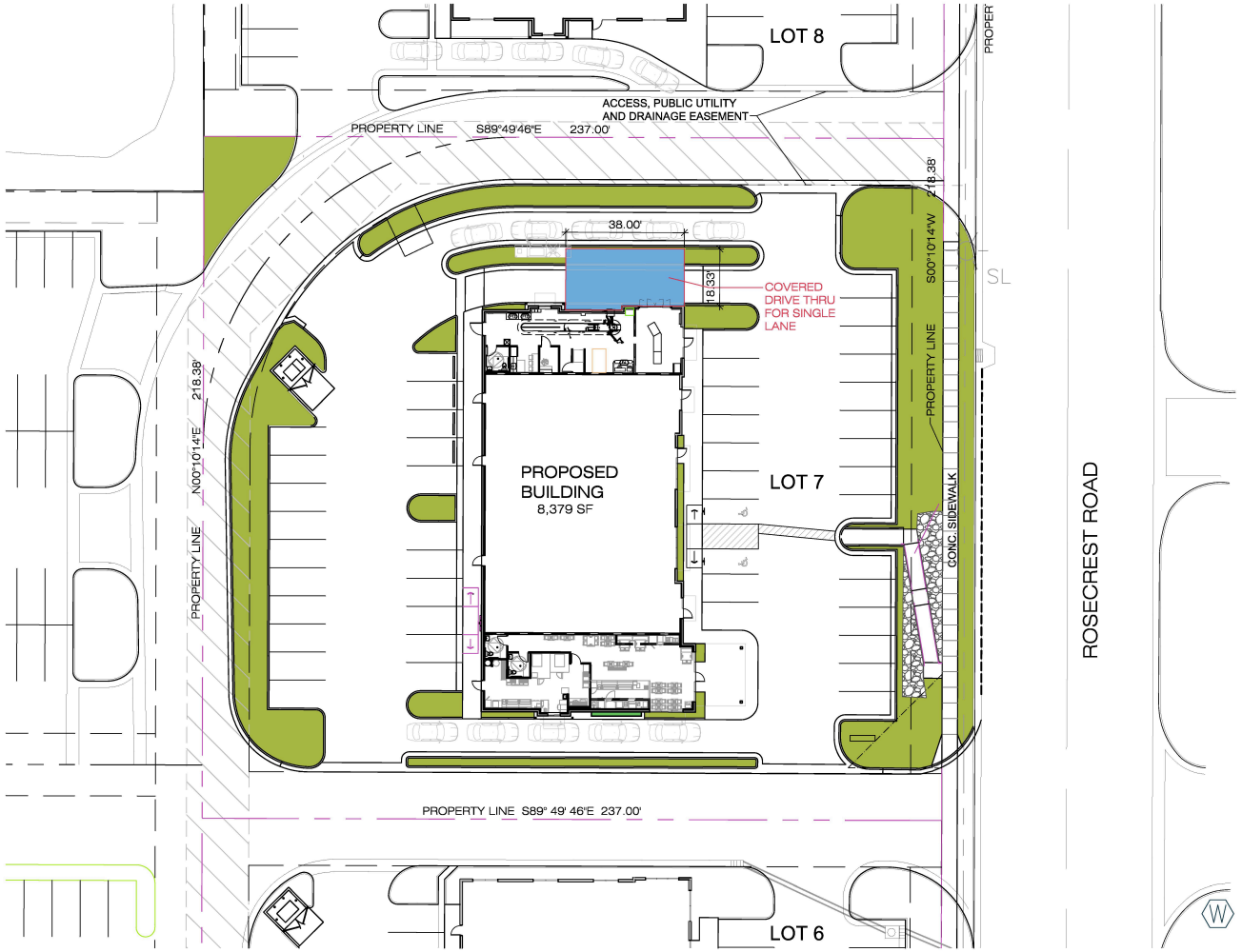

NORTH

sba

SAMUEL J. BRADY

ARCHITECTS

200 E. South Temple
Suite 160
Salt Lake City, Utah 84111
(801) 595-1752
www.sambrady.com

7/9/2020

13338 SOUTH
ROSECREST ROAD
LOT 7

HERRIMAN, UTAH

PROPOSED BUILDING

SITE PLAN

PAPER SIZE (11X17)
SCALE: 1" = 40'-0"

PAPER SIZE (24X36)
SCALE: 1" = 20'-0"

JULY 9, 2020
1936301SD1K.dwg

SD.3

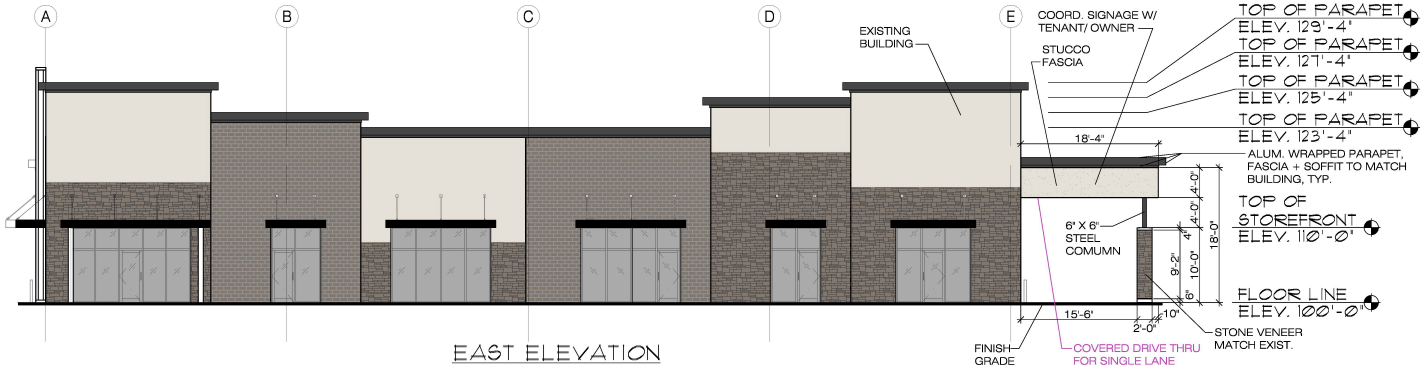

EAST ELEVATION

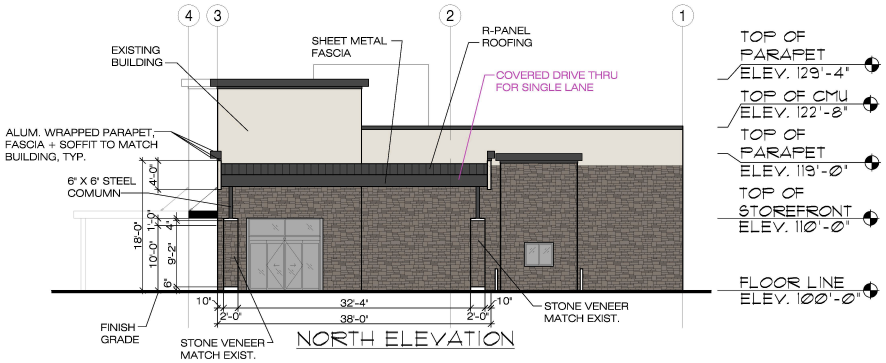

NORTH ELEVATION

NOTE:
OWNER TO OBTAIN A SEPARATE SIGN PERMIT FROM HERRIMAN CITY ZONING FOR ALL PROPOSED SIGNS. ALL SIGNAGE SHALL MEET THE REQUIREMENTS OF HERRIMAN CITY. SIGNAGE TO BE REVIEWED UNDER SEPARATE SUBMITTAL.

NOTE:
SIGNAGE SHALL BE REVIEWED UNDER A SEPARATE SIGN PERMIT APPLICATION.

EXTERIOR FENESTRATION NOTE
U-FACTOR FOR ALL WINDOWS/FENESTRATION TO BE DETERMINED IN ACCORDANCE WITH THE REQUIREMENTS OF THE NFRC 100, CERTIFIED BY AN INDEPENDENT LABORATORY, AND LABELED AS SUCH BY THE MANUFACTURER. THE STICKERS SHOULD BE LEFT ON THE WINDOWS UNTIL AFTER THEY HAVE BEEN INSPECTED, SITE BUILD FENESTRATION SHOULD BE PROVIDED WITH AN ONSITE CERTIFICATION THROUGH NFRC.
U-FACTOR: .29
SHGC RATING: .38
(SOLAR HEAT GAIN COEFFICIENT RATING)

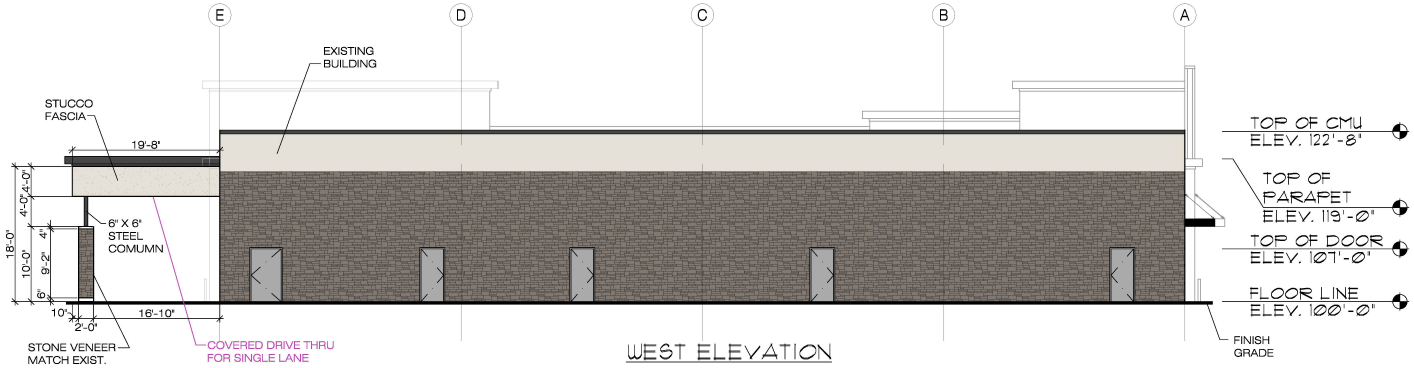

WEST ELEVATION

sba

SAMUEL J. BRADY

ARCHITECTS

200 E. South Temple
Suite 160
Salt Lake City, Utah 84111
(801) 595-1752
www.sambrady.com

7/9/2020

13338 SOUTH ROSECREST ROAD
LOT 7

HERRIMAN, UTAH

PROPOSED BUILDING

EXTERIOR ELEVATIONS

SCALE: 1/8" = 1'-0"

JULY 9, 2020
193630131KB.dwg

A3.1

de
ners
Genie
GTH-844

Date of Meeting: 7/16/2020	
File #	S2020-005
Applicant	Donald Moriarty and Lacey Boyce
Address	14478 and 14486 Herriman View Cove
Request	Plat Amendment for Fort Herriman Cove Phase 3 lots 310 and 311

Staff Report

DATE: July 7, 2020

TO: Planning Commission

FROM: Bryn MacDonald, AICP, Assistant City Planner

MEETING: Planning Commission July 16 2020

REQUEST: Plat amendment to Fort Herriman Cove phase 3 to remove the location of a trail that has been vacated by the City

Applicant: Donald Moriarty and Lacey Boyce
Address: 14478 and 14486 S Herriman View Cove
Zone: A-.25 (Agricultural – 10,000 square foot minimum)
Acres: 1.572
File Number: S2020-005

Request
The applicant is requesting a plat amendment to remove the location of a trail in Fort Herriman Cove Phase 3 between lots 310 and 311.

Site
The property is located at 14478 and 14486 S Herriman View Cove. The property is zoned A-.25.

Notices
Notices are not required for a plat amendment when all property owners are part of the application. The same property owner owns both lots being amended.

Neighborhood Meeting
A neighborhood meeting was not required due to the fact that no new lots are being proposed.

Process
A plat amendment is an administrative decision. The Planning Commission will hold a public meeting and make a decision based on compliance with the applicable ordinances. If the applicant receives preliminary plat approval, the next step will be obtaining final plat approval from the Engineering Department.

Discussion
The applicant owns both lots that are part of this amendment. There is a trail access between lots 310 and 311 that was owned by the City (see map below). The applicant was originally proposing to move this trail location to lot 308. The applicant and staff have worked with the City Council and the trail has now been vacated, with no requirement for a replacement location. This amendment is now to remove the trail as shown on the plat, and place the property back into lots 310 and 311.

Since the same person owns both lots, they can decide if they would like the trail split down the middle, or put all on one lot. The owner has chosen to put most of the property on lot 310. Both of the lots will still meet the minimum size and width as required by the zone.

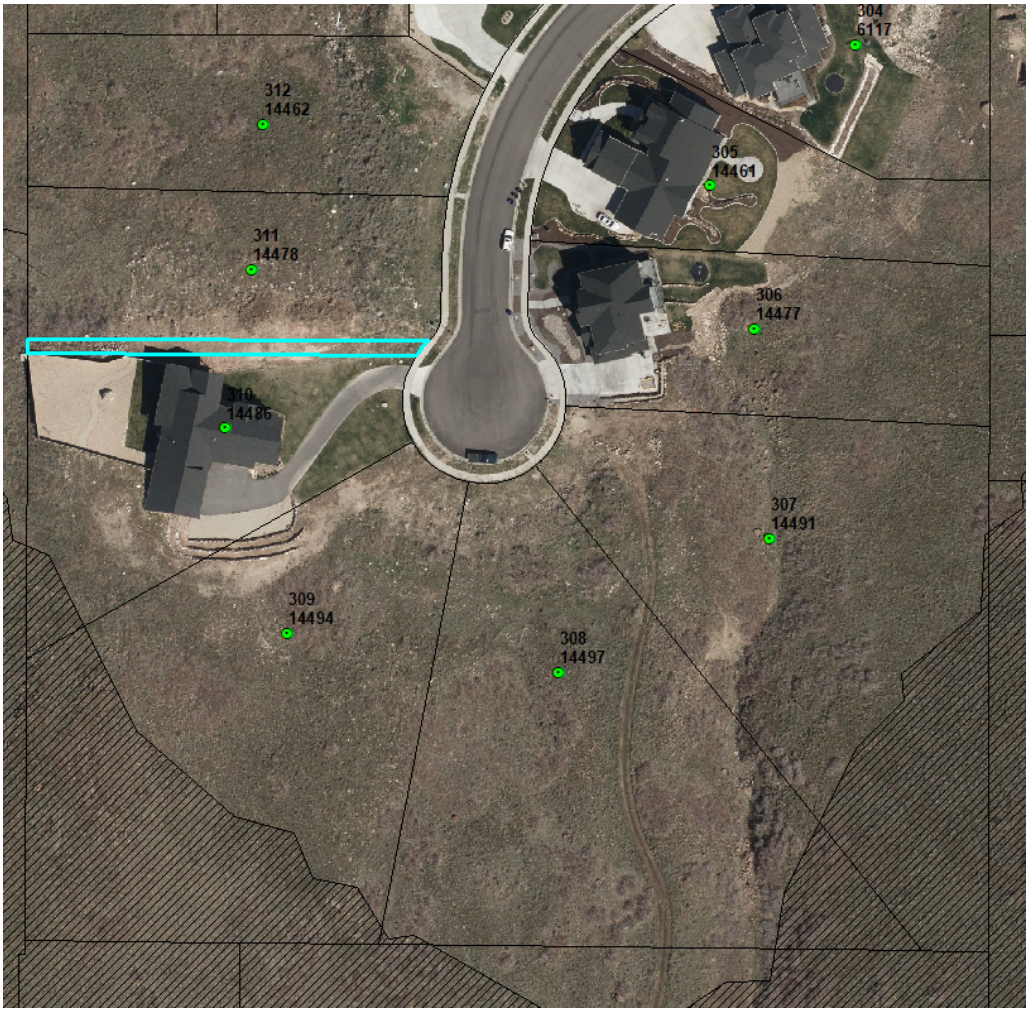

Recommendation

Staff recommends approving the plat amendment for Fort Herriman Cove phase 3, with the following conditions:

1. Receive and agree to the recommendations from other agencies.
2. Final plat to be reviewed and approved by the Engineering Department.

Attachments

A. Vicinity Map
B. Current Recorded Plat
C. Proposed Plat Amendment

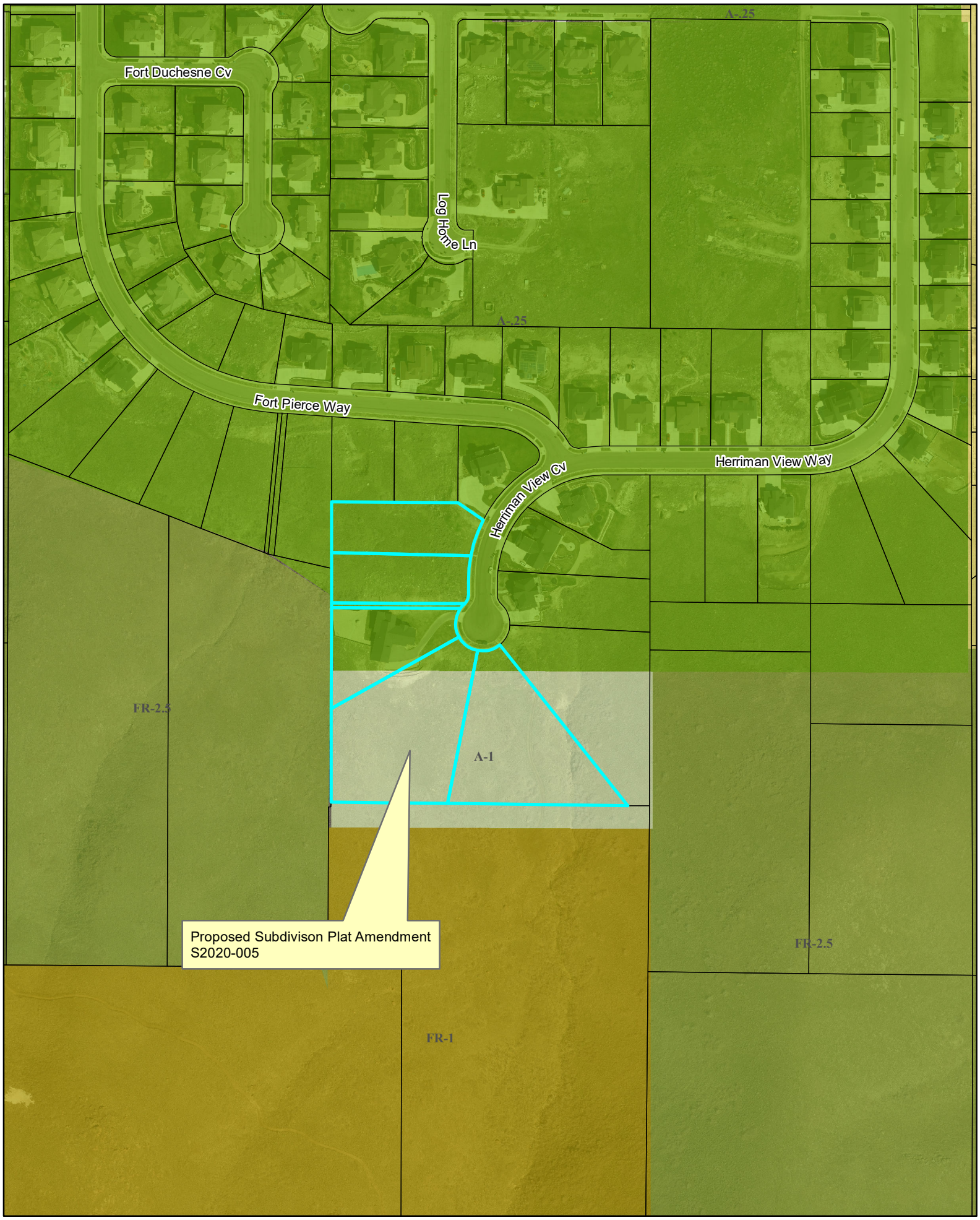

Proposed Subdivison

FORT HERRIMAN COVE PHASE 3 SUBDIVISION

LOCATED IN THE NORTHWEST QUARTER OF SECTION 11, TOWNSHIP 4 SOUTH, RANGE 2 WEST, SALT LAKE BASE & MERIDIAN
HERRIMAN, SALT LAKE COUNTY, UTAH

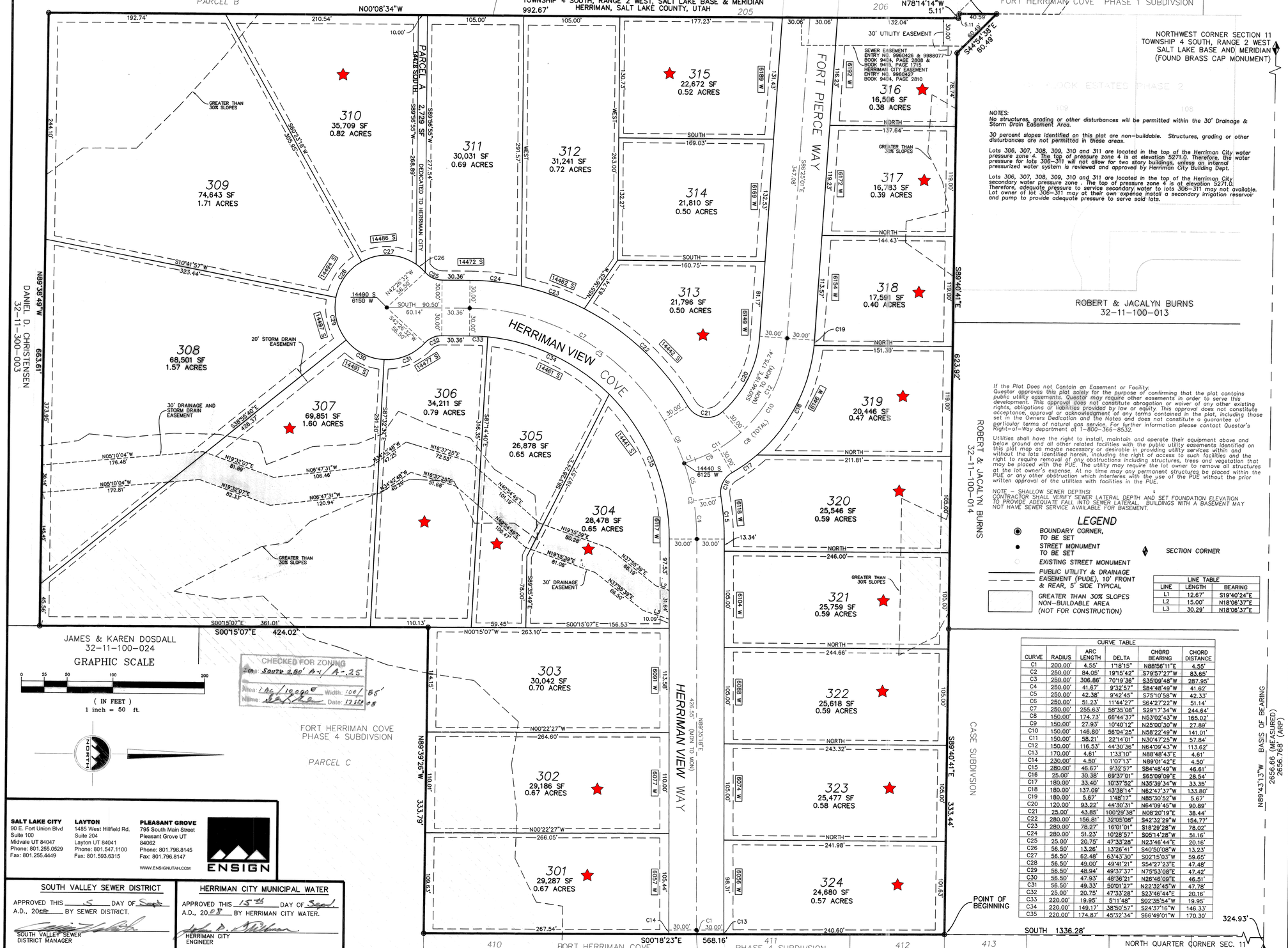

NOTES:
No structures, grading or other disturbances will be permitted within the 30' Drainage & Storm Drain Easement Area.

30 percent slopes identified on this plat are non-buildable. Structures, grading or other disturbances are not permitted in these areas.

Lots 306, 307, 308, 309, 310 and 311 are located in the top of the Herriman City water pressure zone 4. The top of pressure zone 4 is at elevation 5271.0. Therefore, the water pressure for lots 306-311 will not allow for two story buildings, unless an internal pressurized water system is reviewed and approved by Herriman City Building Dept.

Lots 306, 307, 308, 309, 310 and 311 are located in the top of the Herriman City secondary water pressure zone . The top of pressure zone 4 is at elevation 5271.0. Therefore, adequate pressure to service secondary water to lots 306-311 may not available. Lot owner of lot 306-311 may at their own expense install a secondary irrigation reservoir and pump to provide adequate pressure to serve said lots.

If the Plat Does not Contain an Easement or Facility:
Questar approves this plat solely for the purpose of confirming that the plat contains public utility easements. Questar may require other easements in order to serve this development. This approval does not constitute abrogation or waiver of any other existing rights, obligations or liabilities provided by law or equity. This approval does not constitute acceptance, approval or acknowledgment of any terms contained in the plat, including those set in the Owners Dedication and the Notes and does not constitute a guarantee of particular terms of natural gas service. For further information please contact Questar's Right-of-Way department at 1-800-366-8532.

Utilities shall have the right to install, maintain and operate their equipment above and below ground and all other related facilities with the public utility easements identified on this plat map as maybe necessary or desirable in providing utility services within and without the lots identified herein, including the right of access to such facilities and the right to require removal of any obstructions including structures, trees and vegetation that may be placed with the PUE. The utility may require the lot owner to remove all structures at the lot owner's expense. At no time may any permanent structures be placed within the PUE or any other obstruction which interferes with the use of the PUE without the prior written approval of the utilities with facilities in the PUE.

NOTE - SHALLOW SEWER DEPTHS:
CONTRACTOR SHALL VERIFY SEWER LATERAL DEPTH AND SET FOUNDATION ELEVATION TO PROVIDE ADEQUATE FALL INTO SEWER LATERAL. BUILDINGS WITH A BASEMENT MAY NOT HAVE SEWER SERVICE AVAILABLE FOR BASEMENT.

LEGEND

- BOUNDARY CORNER, TO BE SET
- STREET MONUMENT TO BE SET
- EXISTING STREET MONUMENT
- PUBLIC UTILITY & DRAINAGE EASEMENT (PUDE), 10' FRONT & REAR, 5' SIDE TYPICAL
- GREATER THAN 30% SLOPES NON-BUILDABLE AREA (NOT FOR CONSTRUCTION)
- SECTION CORNER

LINE TABLE

LINE	LENGTH	BEARING
L1	12.67'	S19°40'24"E
L2	15.00'	N18°06'37"E
L3	30.29'	N18°06'37"E

CURVE TABLE

CURVE	RADIUS	ARC LENGTH	DELTA	CHORD BEARING	CHORD DISTANCE
C1	200.00'	4.55'	1°18'15"	N88°56'11"E	4.55'
C2	250.00'	84.05'	19°15'42"	S79°57'27"W	83.65'
C3	250.00'	306.86'	70°19'36"	S35°09'48"W	287.95'
C4	250.00'	41.67'	9°32'57"	S84°48'49"W	41.62'
C5	250.00'	42.38'	9°42'45"	S75°10'58"W	42.33'
C6	250.00'	51.23'	11°44'27"	S64°27'22"W	51.14'
C7	250.00'	255.63'	58°35'08"	S29°17'34"W	244.64'
C8	150.00'	174.73'	66°44'37"	N53°02'43"W	165.02'
C9	150.00'	27.93'	10°40'12"	N25°00'30"W	27.89'
C10	150.00'	146.80'	56°04'25"	N58°22'49"W	141.01'
C11	150.00'	58.21'	22°14'01"	N30°47'25"W	57.84'
C12	150.00'	116.53'	44°30'36"	N64°09'43"W	113.62'
C13	170.00'	4.61'	1°33'10"	N88°48'43"E	4.61'
C14	230.00'	4.50'	1°07'13"	N89°01'42"E	4.50'
C15	280.00'	46.67'	9°32'57"	S84°48'49"W	46.61'
C16	25.00'	30.38'	69°37'01"	S65°09'09"E	28.54'
C17	180.00'	33.40'	10°37'52"	N35°39'34"W	33.35'
C18	180.00'	137.09'	43°38'14"	N62°47'37"W	133.80'
C19	180.00'	5.67'	1°48'17"	N85°30'52"W	5.67'
C20	120.00'	93.22'	44°30'31"	N64°09'45"W	90.89'
C21	25.00'	43.85'	100°29'38"	N08°20'19"E	38.44'
C22	280.00'	156.81'	32°05'08"	S42°32'29"W	154.77'
C23	280.00'	78.27'	16°01'01"	S18°29'28"W	78.02'
C24	280.00'	51.23'	10°28'57"	S05°14'28"W	51.16'
C25	25.00'	20.75'	47°33'28"	N23°46'44"E	20.16'
C26	56.50'	13.26'	13°26'41"	S40°50'08"W	13.23'
C27	56.50'	62.48'	63°43'30"	S02°15'03"W	59.65'
C28	56.50'	49.00'	49°41'21"	S54°27'23"E	47.48'
C29	56.50'	48.94'	49°37'37"	N75°53'08"E	47.42'
C30	56.50'	47.91'	48°36'21"	N26°46'09"E	46.51'
C31	56.50'	49.33'	50°01'27"	N22°32'45"W	47.78'
C32	25.00'	20.75'	47°33'28"	S23°46'44"E	20.16'
C33	220.00'	19.95'	5°11'48"	S02°35'54"W	19.95'
C34	220.00'	149.17'	38°50'57"	S24°37'16"W	146.33'
C35	220.00'	174.87'	45°32'34"	S66°49'01"W	170.30'

SURVEYOR'S CERTIFICATE

I, Patrick M. Harris, do hereby certify that I am a Professional Land Surveyor, and that I hold Certificate No. 286882 as prescribed under the laws of the State of Utah. I further certify that by authority of the Owners, I have made a survey of the tract of land shown on this plat and described below, and have subdivided said tract of land into lots and streets, hereafter to be known as

FORT HERRIMAN COVE PHASE 3 SUBDIVISION

and that same has been surveyed and staked on the ground as shown on this plat.

BOUNDARY DESCRIPTION

Beginning at a point N89°43'12"W 325.06 feet along the Section Line and South 1336.28 feet from North Quarter Corner of Section 11, Township 4 South, Range 2 West, Salt Lake Base and Meridian; and running thence S00°18'23"E 568.16 feet; thence N89°39'26"W 333.79 feet; thence S00°15'07"E 424.02 feet; thence N89°38'49"W 663.61 feet to the Easterly Boundary Line of Fort Herriman Cove, Phase 2 Subdivision; thence, along said Easterly Boundary Line the following two (2) courses: (1) N00°08'34"W 992.67 feet, (2) N78°14'14"W 5.11 feet to the Southeast Corner of Fort Herriman Cove, Phase 1 Subdivision; thence, along the Easterly Boundary Line of said Fort Herriman Cove, Phase 1 Subdivision, N00°08'34"W 40.59 feet to the Southwest Corner of Overlook Phase 2 Subdivision recorded in Book 2006P at Page 56 in the Office of the Salt Lake County Recorder; thence S44°54'38"E 60.49 feet along the Southerly Boundary Line of said Overlook Phase 2 Subdivision; thence S89°40'41"E 623.92 feet along said Southerly Boundary Line and its extension to the Southwesterly Corner of Case Subdivision, recorded in Book 94-P at Page 283 in the Office of the Salt Lake County Recorder; thence S89°40'41"E (S89°38'10"E per plat) 333.44 feet along the Southerly Boundary Line of said Case Subdivision to the point of beginning.
Contains 19.580 acres and 24 Lots

PROFESSIONAL LAND SURVEYOR
9-3-08
No. 286882
PATRICK M. HARRIS
STATE OF UTAH

SEPT. 3, 2008
Date

Patrick M. Harris
P.L.S. No. 286882

OWNER'S DEDICATION

Know all men by these presents that _____, the _____undersigned owner( ) of the above described tract of land, having caused the same to be subdivided into lots and streets to be hereafter known as

FORT HERRIMAN COVE PHASE 3 SUBDIVISION

do hereby dedicate for perpetual use of the public all parcels of land, rights-of-way and easements as shown on this plat as intended for Public use.

In witness whereof _____have hereunto set _____this _____day of _____A.D., 20____.

Builders Development Group

CORPORATE ACKNOWLEDGMENT

STATE OF UTAH
COUNTY OF Salt Lake } S.S.
On the 15 day of September A.D., 2008, Shaun Hesselting personally appeared before me, the undersigned Notary Public, in and for said County of Salt Lake in the State of Utah, who after being duly sworn, acknowledged to me that he is the Principal President of _____, a PC Corporation, that he signed the Owner's Dedication freely and voluntarily for and in behalf of said Corporation for the purposes therein mentioned.

MY COMMISSION EXPIRES May 13, 2012 — Delinda Bodrero
NOTARY PUBLIC RESIDING IN Salt Lake COUNTY

NOTARY PUBLIC DELINDA BODRERO 13011 S. Pioneer Street Herriman, Utah 84096 My Commission Expires May 13, 2012 STATE OF UTAH

ACKNOWLEDGMENT

STATE OF UTAH
COUNTY OF _____ } S.S.
On the _____day of _____A.D., 20_____ personally appeared before me, the undersigned Notary Public, in and for said County of _____in the State of _____, the signer( ) of the above Owner's Dedication ____in number, who after being duly sworn, acknowledged to me that _____ signed it freely and voluntarily for the purposes therein mentioned.

MY COMMISSION EXPIRES _____
NOTARY PUBLIC RESIDING IN _____ COUNTY

LIMITED LIABILITY COMPANY ACKNOWLEDGMENT

STATE OF UTAH
COUNTY OF _____ } S.S.
On the _____day of _____A.D., 20_____ personally appeared before me, the undersigned Notary Public, in and for said County of _____in the State of _____, who after being duly sworn, acknowledged to me that _____, a Limited Liability Company, that _____signed the Owner's Dedication freely and voluntarily for and in behalf of said Limited Liability Company for the purposes therein mentioned.

MY COMMISSION EXPIRES _____
NOTARY PUBLIC RESIDING IN _____ COUNTY

SALT LAKE CITY
90 E. Fort Union Blvd
Suite 100
Midvale UT 84047
Phone: 801.255.0529
Fax: 801.255.4449

LAYTON
1485 West Hillfield Rd.
Suite 204
Layton UT 84041
Phone: 801.547.1100
Fax: 801.593.6315

PLEASANT GROVE
795 South Main Street
Pleasant Grove UT
84062
Phone: 801.796.8145
Fax: 801.796.8147

WWW.ENSIGNUTAH.COM

ENSIGN

SOUTH VALLEY SEWER DISTRICT
APPROVED THIS 5 DAY OF Sept A.D., 2008 BY SEWER DISTRICT.
SOUTH VALLEY SEWER DISTRICT MANAGER

HERRIMAN CITY MUNICIPAL WATER
APPROVED THIS 15th DAY OF Sept A.D., 2008 BY HERRIMAN CITY WATER.
HERRIMAN CITY ENGINEER

PLANNING COMMISSION
APPROVED THIS 18th DAY OF Sept A.D., 2008 BY THE HERRIMAN PLANNING COMMISSION.
CHAIRMAN, HERRIMAN PLANNING COMMISSION

QWEST COMMUNICATIONS
APPROVED THIS 11 DAY OF SEPT A.D., 2008 BY QWEST.
QWEST

PACIFICORP
APPROVED THIS 11 DAY OF SEPT A.D., 2008 BY PACIFICORP.
PACIFICORP

QUESTAR
APPROVED THIS 11TH DAY OF SEPT. A.D., 2008 BY QUESTAR.
QUESTAR

HEALTH
APPROVED THIS 11th DAY OF September A.D., 2008 BY
DIRECTOR

HERRIMAN CITY ENGINEER
I HEREBY CERTIFY THAT THIS OFFICE HAS EXAMINED THIS PLAT AND IT IS CORRECT IN ACCORDANCE WITH INFORMATION ON FILE IN THIS OFFICE.
9/3/08
DATE
HERRIMAN CITY ENGINEER

APPROVAL AS TO FORM
APPROVED AS TO FORM THIS 29 DAY OF Sept A.D., 2008.
HERRIMAN CITY ATTORNEY

HERRIMAN CITY COUNCIL
PRESENTED TO THE HERRIMAN CITY COUNCIL THIS 29 DAY OF Sept A.D., 2008 AT WHICH TIME THIS SUBDIVISION WAS APPROVED AND ACCEPTED.
ATTEST: CLERK MAYOR

FORT HERRIMAN COVE PHASE 3 SUBDIVISION

LOCATED IN THE NORTHWEST QUARTER OF SECTION 11, TOWNSHIP 4 SOUTH, RANGE 2 WEST, SALT LAKE BASE & MERIDIAN
HERRIMAN, SALT LAKE COUNTY, UTAH

RECORDED # 10530086
STATE OF UTAH, COUNTY OF SALT LAKE, RECORDED AND FILED AT THE REQUEST OF : Builders Development Group
DATE: 9/29/08 TIME: 2:49 PM BOOK: 2008P PAGE: 252
FEE$ 54.00
DEPUTY SALT LAKE COUNTY RECORDER

32-11-11, 12 32-11-100-080

Agenda

FORT HERRIMAN COVE PHASE 3 LOTS 310 AND 311 AMENDED SUBDIVISION

AMENDING LOTS 310 AND 311, AND ALSO PARCEL A OF FORT HERRIMAN COVE PHASE 3 SUBDIVISION

LOCATED IN THE NORTHWEST QUARTER OF SECTION 11,
TOWNSHIP 4 SOUTH, RANGE 2 WEST, SALT LAKE BASE & MERIDIAN
HERRIMAN CITY, SALT LAKE COUNTY, UTAH

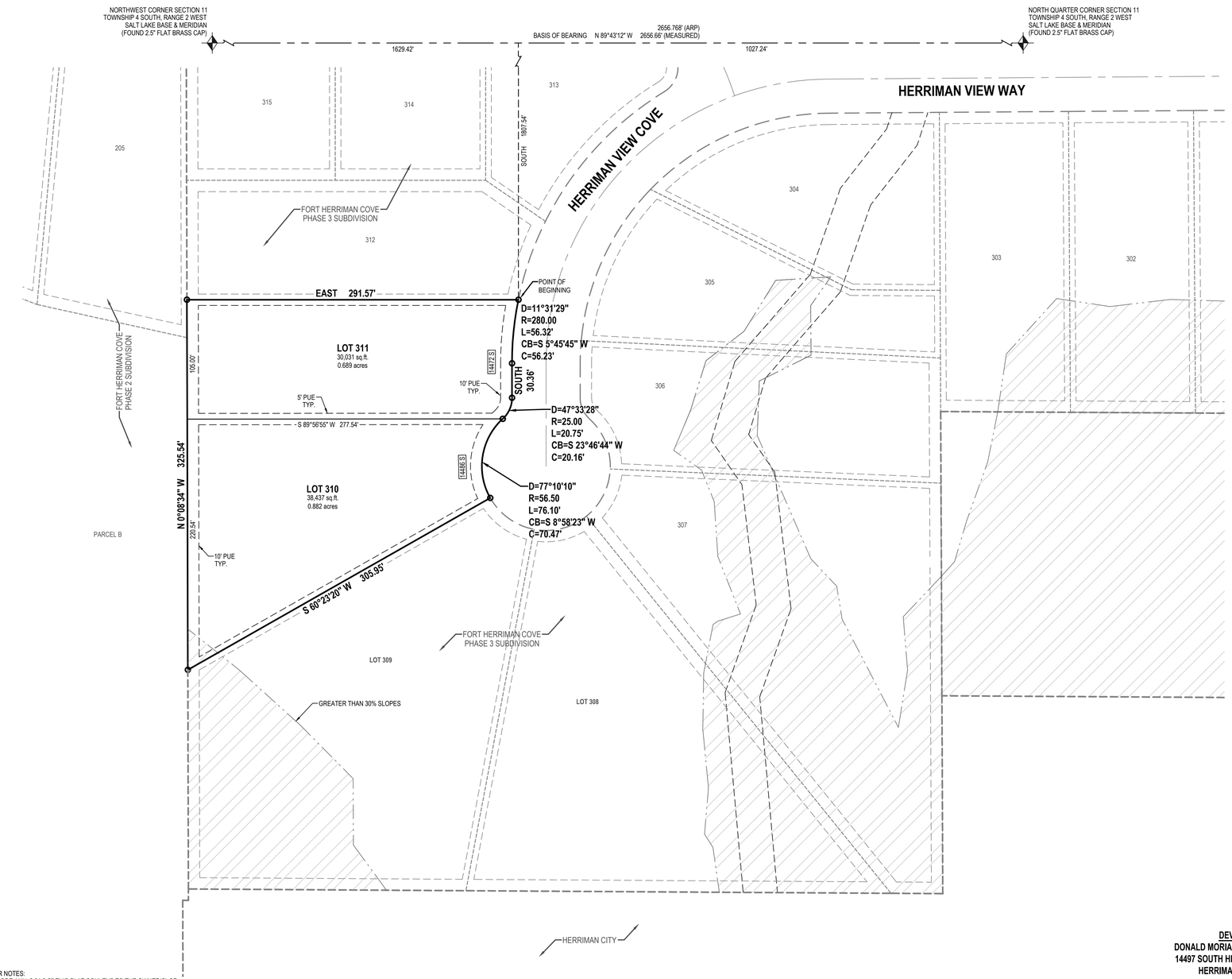

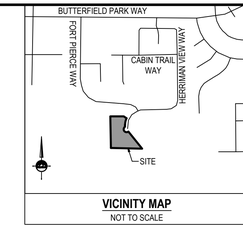

VICINITY MAP
NOT TO SCALE

SURVEYOR'S CERTIFICATE

I, **PATRICK M. HARRIS** do hereby certify that I am a Licensed Land Surveyor, and that I hold Certificate No. **286682** as prescribed under laws of the State of Utah. I further certify that by authority of the Owners, I have made a survey of the tract of land shown on this plat and described below, and have subdivided said tract of land into lots and streets, hereafter to be known as **FORT HERRIMAN COVE PHASE 3 LOTS 310 AND 311 AMENDED SUBDIVISION**, and that the same has been correctly surveyed and staked on the ground as shown on this plat. I further certify that all lots meet frontage width and area requirements of the applicable zoning ordinances.

BOUNDARY DESCRIPTION

All of Lots 310 and 311 and also Parcel A of Fort Herriman Cove Phase 3 Subdivision, recorded September 29, 2008 as Entry No. 10530080 in Book 2008P at Page 252 in the Office of the Salt County Recorder, being more particularly described as follows:

Beginning at the Southeast Corner of Lot 312 of Fort Herriman Cove Phase 3 Subdivision, recorded September 29, 2008 as Entry No. 10530080 in Book 2008P at Page 252 in the Office of the Salt County Recorder, said point being North 89°43'12" West 1,027.24 feet along the section line and South 1,807.54 feet from the North Quarter Corner of Section 11, Township 4 South, Range 2 West, Salt Lake Base and Meridian; and running

thence Southwesterly 56.32 feet along the arc of a 280.00 foot radius curve to the left (center bears South 78°28'31" East and the chord bears South 05°45'45" West 56.23 feet with a central angle of 11°31'29");
thence South 30.36 feet;
thence Southwesterly 20.75 feet along the arc of a 25.00 foot radius curve to the right (center bears West and the chord bears South 23°46'44" West 20.16 feet with a central angle of 47°33'28");
thence Southwesterly 76.10 feet along the arc of a 56.50 foot radius curve to the left (center bears South 42°26'32" East and the chord bears South 08°58'23" West 70.47 feet with a central angle of 77°10'10");
thence South 60°23'20" West 305.95 feet;
thence North 00°08'34" West 325.54 feet;
thence East 291.57 feet to the point of beginning.

Contains 68,468 Square Feet or 1.572 Acres and 2 Lots

DATE

PATRICK M. HARRIS
LICENSE No. 286682

LEGEND

- EXISTING STREET MONUMENT
- SECTION CORNER
- ENSIGN ENG. LAND SURV. — SET 5/8" REBAR WITH YELLOW PLASTIC CAP, OR NAIL STAMPED "ENSIGN ENG. & LAND SURV."
- BOUNDARY LINE
- SECTION LINE
- CENTER LINE
- EASEMENT LINE
- GREATER THAN 30% SLOPES NON-BUILDABLE AREA (NOT FOR CONSTRUCTION)

NOTE:
SHALLOW SEWER DEPTHS! CONTRACTOR SHALL VERIFY SEWER LATERAL DEPTH AND SET FOUNDATION ELEVATION TO PROVIDE ADEQUATE FALL INTO SEWER LATERAL. BUILDINGS WITH A BASEMENT MAY NOT HAVE SEWER SERVICE AVAILABLE FOR BASEMENT.

OWNER'S DEDICATION

Known all men by these presents that I / we, the undersigned owner (s) of the above described tract of land, having caused same to be subdivided into lots, streets and easements, hereafter known as the

FORT HERRIMAN COVE PHASE 3
LOTS 310 AND 311 AMENDED SUBDIVISION

do hereby dedicate for perpetual use of the public all parcels of land shown on this plat as intended for Public use. Owner(s) hereby agree to warrant and defend and save the City harmless against any easements or other encumbrance on a dedicated street which will interfere with the City's use, maintenance, and operation of the street.

In witness whereof I / we have hereunto set our hand (s) this_____day of_____A.D., 20_____.

By: Donald Moriarty

By: Lacey Boyce

By:
Herriman City

INDIVIDUAL ACKNOWLEDGMENT

STATE OF UTAH
COUNTY OF_____} S.S.

ON THIS ____ DAY OF _____, IN THE YEAR 20 ___, BEFORE ME _____,
PERSONALLY APPEARED _____
_____, THE SIGNER(S) OF THE FOREGOING INSTRUMENT WHO DULY ACKNOWLEDGED TO ME THAT HE/SHE/THEY EXECUTED THE SAME.

NOTARY SIGNATURE

MY COMMISSION EXPIRES:_____,
RESIDING IN_____ COUNTY.

MUNICIPAL ACKNOWLEDGMENT

STATE OF UTAH
COUNTY OF SALT LAKE }S.S.

ON THE ____ DAY OF _____, IN THE YEAR 20___, BEFORE ME_____, THE SIGNER OF THE FOREGOING INSTRUMENT, WHO DULY ACKNOWLEDGED TO ME THAT HE/SHE IS THE_____, OF _____, AND IS AUTHORIZED TO EXECUTE THE FOREGOING AGREEMENT IN ITS BEHALF AND THAT HE/SHE EXECUTED IT IN SUCH CAPACITY.

NOTARY SIGNATURE

MY COMMISSION EXPIRES:_____,
RESIDING IN_____ COUNTY.

DEVELOPER
DONALD MORIARTY & LACEY BOYCE
14497 SOUTH HERRIMAN VIEW COVE
HERRIMAN, UTAH 84096

HORIZONTAL GRAPHIC SCALE
50 0 25 50 100
(IN FEET)
HORZ: 1 inch = 50 ft.

ROCKY MOUNTAIN POWER NOTES:
1. PURSUANT TO UTAH CODE ANN. § 54-3-27 THIS PLAT CONVEYS TO THE OWNER(S) OR OPERATORS OF UTILITY FACILITIES A PUBLIC UTILITY EASEMENT ALONG WITH ALL THE RIGHTS AND DUTIES DESCRIBED THEREIN.
2. PURSUANT TO UTAH CODE ANN. § 17-27A-603(4)(C)(II) ROCKY MOUNTAIN POWER ACCEPTS DELIVERY OF THE PUE AS DESCRIBED IN THIS PLAT AND APPROVES THIS PLAT SOLELY FOR THE PURPOSE OF CONFIRMING THAT THE PLAT CONTAINS PUBLIC UTILITY EASEMENTS AND APPROXIMATES THE LOCATION OF THE PUBLIC UTILITY EASEMENTS, BUT DOES NOT WARRANT THEIR PRECISE LOCATION. ROCKY MOUNTAIN POWER MAY REQUIRE OTHER EASEMENTS IN ORDER TO SERVE THIS DEVELOPMENT. THIS APPROVAL DOES NOT AFFECT ANY RIGHT THAT ROCKY MOUNTAIN POWER HAS UNDER:
   2.1. A RECORDED EASEMENT OR RIGHT-OF WAY
   2.2. THE LAW APPLICABLE TO PRESCRIPTIVE RIGHTS
   2.3. TITLE 54, CHAPTER 8A, DAMAGE TO UNDERGROUND UTILITY FACILITIES OR
   2.4. ANY OTHER PROVISION OF LAW.

Dominion Energy Utah - Note:
Questar Gas Company dba Dominion Energy Utah, approves this plat for the purpose of approximating the location, boundaries, course and dimensions of the Rights-of-Way and Easement Grants and existing underground facilities. Nothing herein shall be constructed to warrant or verify the precise location of such items. The Rights-of-Way and easements are subject to numerous restrictions appearing on the recorded right-of-way and easement grant(s). Dominion Energy Utah also approves this plat for the purpose of confirming that the plat contains public utility easements; however, Dominion Energy Utah may require additional easements in order to serve this development. This approval does not constitute abrogation or waiver of any other existing rights, obligations or liabilities provided by law or equity. This approval does not constitute acceptance, approval or acknowledgment of any terms contained in the plat, including those set in the Owners Dedication or the Notes, and does not constitute a guarantee of particular terms or conditions of natural gas service, for further information please contact Dominion Energy Utah's Right-of-Way Department at 800-366-8532.

CENTURYLINK COMMUNICATIONS
APPROVED THIS _____ DAY OF _____, 20_____, BY THE CENTURYLINK.
CENTURYLINK COMMUNICATIONS

COMCAST
APPROVED THIS _____ DAY OF _____, 20_____, BY THE COMCAST.
COMCAST

ROCKY MOUNTAIN POWER
APPROVED THIS _____ DAY OF _____, 20_____, BY THE ROCKY MOUNTAIN POWER.
ROCKY MOUNTAIN POWER

DOMINION ENERGY
APPROVED THIS _____ DAY OF _____, 20_____, BY THE DOMINION ENERGY
DOMINION ENERGY

ENSIGN
SALT LAKE CITY
45 W. 10000 S., Suite 500
Sandy, UT. 84070
Phone: 801.255.0529
Fax: 801.255.4449
WWW.ENSIGNENG.COM
LAYTON
Phone:801.547.1100
TOOELE
Phone: 435.843.3590
CEDAR CITY
Phone: 435.865.1453
RICHFIELD
Phone: 435.896.2983

SHEET 1 OF 1
PROJECT NUMBER : 4169O
MANAGER : JKF
DRAWN BY : KFW
CHECKED BY : PMH
DATE : 7/1/20

FORT HERRIMAN COVE PHASE 3
LOTS 310 AND 311 AMENDED SUBDIVISION
AMENDING LOTS 310 AND 311, AND ALSO PARCEL A OF FORT HERRIMAN COVE PHASE 3 SUBDIVISION
LOCATED IN THE NORTHWEST QUARTER OF SECTION 11,
TOWNSHIP 4 SOUTH, RANGE 2 WEST, SALT LAKE BASE & MERIDIAN
HERRIMAN CITY, SALT LAKE COUNTY, UTAH

TABULATIONS

TOTAL PLAT ACREAGE	1.572 ACRES
TOTAL LOT ACREAGE	1.572 ACRES
TOTAL ACREAGE IN PUBLIC STREET	0.000 ACRES
TOTAL ACREAGE IN OPEN SPACE	0.000 ACRES
NUMBER OF LOTS	2

SOUTH VALLEY SEWER DISTRICT
APPROVED THIS _____ DAY OF _____, 20_____, BY THE SOUTH VALLEY SEWER DISTRICT.
SOUTH VALLEY SEWER DISTRICT MANAGER

HEALTH DEPARTMENT APPROVAL
APPROVED THIS _____ DAY OF _____, 20_____, BY THE HEALTH DEPARTMENT.
DIRECTOR, SALT LAKE COUNTY HEALTH DEPARTMENT

CHECKED FOR ZONING
ZONE: _____ DATE: _____
AREA: _____ WIDTH: _____
NAME: _____

PLANNING COMMISSION APPROVAL
APPROVED THIS _____ DAY OF _____, 20_____, BY THE HERRIMAN PLANNING COMMISSION.
CHAIR, HERRIMAN PLANNING COMMISSION

HERRIMAN CITY MUNICIPAL WATER
APPROVED THIS _____ DAY OF _____, 20_____, BY THE HERRIMAN CITY MUNICIPAL WATER.
HERRIMAN CITY

HERRIMAN CITY ENGINEER
I HEREBY CERTIFY THAT THIS OFFICE HAS EXAMINED THIS PLAT AND IT IS CORRECT IN ACCORDANCE WITH INFORMATION ON FILE IN THIS OFFICE.
DATE HERRIMAN CITY ENGINEER

APPROVAL AS TO FORM
APPROVED AS TO FORM THIS _____ DAY OF _____, 20_____.
HERRIMAN CITY ATTORNEY

HERRIMAN CITY
APPROVED THIS _____ DAY OF _____, 20_____, BY THE HERRIMAN CITY.
ATTEST: RECORDER PLANNING DIRECTOR

RECORDED #

STATE OF UTAH, COUNTY OF SALT LAKE, RECORDED AND FILED AT THE
REQUEST OF : _____
DATE: _____ TIME: _____ BOOK: _____ PAGE: _____
FEE$ DEPUTY SALT LAKE COUNTY RECORDER

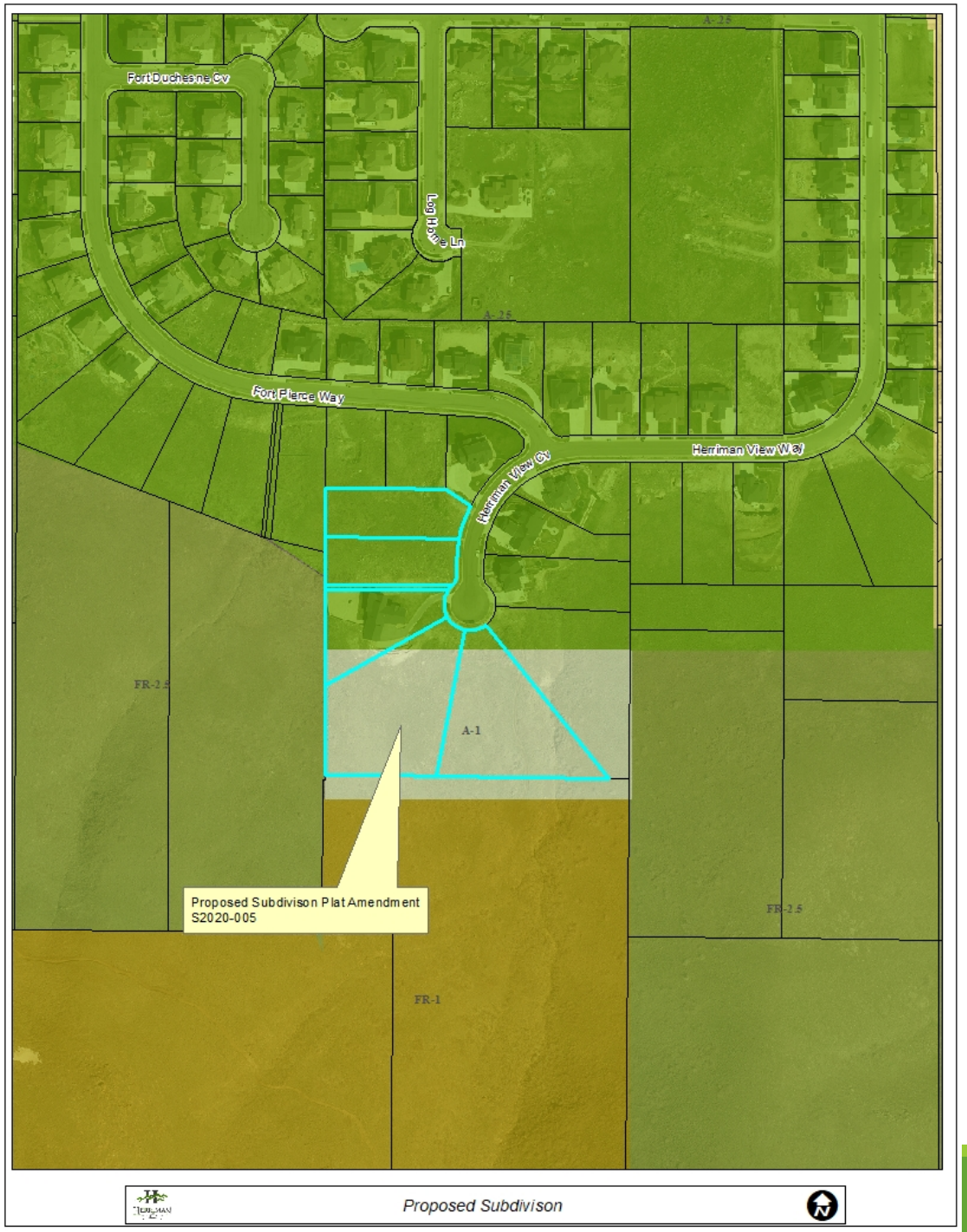

Item 3.4

Request: Plat Amendment for Fort Herriman Cove Phase 3 lots 310 and 311

Applicant: Donald Moriarty and Lacey Boyce

Address: 14478 and 14486 S Herriman View Cove

Zone: A-.25 (Agricultural – 10,000 sq ft min)

Acres: 1.572

File Number: S2020-005

Process

- A plat amendment is an administrative decision.
- The Planning Commission holds a public meeting and makes a decision based on compliance with the applicable ordinances and standards.
- A neighborhood meeting is not required because no new lots are being created.
- A public hearing is not required because the same property owner owns both lots.

Current plat

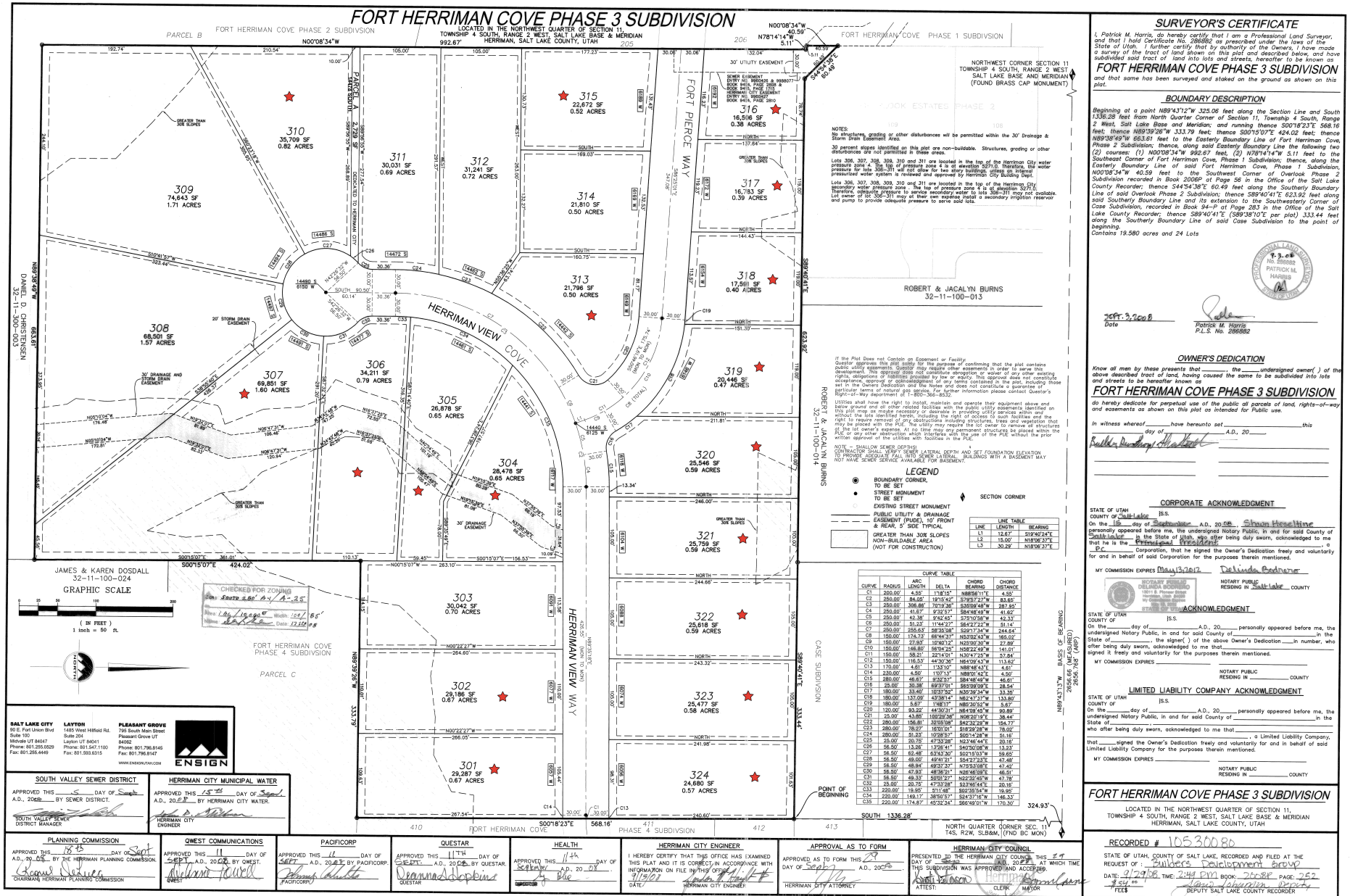

SURVEYOR'S CERTIFICATE

I, Patrick M. Harris, do hereby certify that I am a Professional Land Surveyor, and that I hold Certificate No. 286882 as prescribed under the laws of the State of Utah. I further certify that by authority of the Owners, I have made a survey of the tract of land shown on this plat and described below, and have subdivided said tract of land into lots and streets, hereafter to be known as

FORT HERRIMAN COVE PHASE 3 SUBDIVISION

and that same has been surveyed and staked on the ground as shown on this plat.

BOUNDARY DESCRIPTION

Beginning at a point N89°43'12"W 325.06 feet along the Section Line and South 1336.28 feet from North Quarter Corner of Section 11, Township 4 South, Range 2 West, Salt Lake Base and Meridian; and running thence S00°18'23"E 568.16 feet; thence N89°39'26"W 333.79 feet; thence S00°15'07"E 424.02 feet; thence N89°38'49"W 663.61 feet to the Easterly Boundary Line of Fort Herriman Cove, Phase 2 Subdivision; thence, along said Easterly Boundary Line the following two (2) courses: (1) N00°08'34"W 992.67 feet, (2) N78°14'14"W 5.11 feet to the Southeast Corner of Fort Herriman Cove, Phase 1 Subdivision; thence, along the Easterly Boundary Line of said Fort Herriman Cove, Phase 1 Subdivision, N00°08'34"W 40.59 feet to the Southwest Corner of Overlook Phase 2 Subdivision recorded in Book 2006P at Page 56 in the Office of the Salt Lake County Recorder; thence S44°54'38"E 60.49 feet along the Southerly Boundary Line of said Overlook Phase 2 Subdivision; thence S89°40'41"E 623.92 feet along said Southerly Boundary Line and its extension to the Southwesterly Corner of Case Subdivision, recorded in Book 94-P at Page 283 in the Office of the Salt Lake County Recorder; thence S89°40'41"E (S89°38'10"E per plat) 333.44 feet along the Southerly Boundary Line of said Case Subdivision to the point of beginning.
Contains 19.580 acres and 24 Lots

9-3-08
No. 286882
PATRICK M. HARRIS
PROFESSIONAL LAND SURVEYOR
STATE OF UTAH

SEPT. 3, 2008
Date

Patrick M. Harris
P.L.S. No. 286882

OWNER'S DEDICATION

Know all men by these presents that _____, the _____undersigned owner( ) of the above described tract of land, having caused the same to be subdivided into lots and streets to be hereafter known as

FORT HERRIMAN COVE PHASE 3 SUBDIVISION

do hereby dedicate for perpetual use of the public all parcels of land, rights-of-way and easements as shown on this plat as intended for Public use.

In witness whereof_____have hereunto set_____this _____ day of _____A.D., 20____

Builders Development Group, President

CORPORATE ACKNOWLEDGMENT

STATE OF UTAH
COUNTY OF Salt Lake
|S.S.
On the 18 day of September A.D., 2008 Shawn Hawkins personally appeared before me, the undersigned Notary Public, in and for said County of Salt Lake in the State of Utah, who after being duly sworn, acknowledged to me that he is the Principal President of B.D.G. Corporation, that he signed the Owner's Dedication freely and voluntarily for and in behalf of said Corporation for the purposes therein mentioned.

MY COMMISSION EXPIRES May 13, 2012
Delinda Bodrero
NOTARY PUBLIC
RESIDING IN Salt Lake COUNTY

NOTARY PUBLIC DELINDA BODRERO 1911 S Pioneer Street Herriman Utah 84096 My Commission Expires May 13, 2012 STATE OF UTAH

ACKNOWLEDGMENT

STATE OF UTAH
COUNTY OF
|S.S.
On the _____ day of_____A.D., 20__, personally appeared before me, the undersigned Notary Public, in and for said County of_____ in the State of_____, the signer( ) of the above Owner's Dedication____in number, who after being duly sworn, acknowledged to me that_____ signed it freely and voluntarily for the purposes therein mentioned.

MY COMMISSION EXPIRES _____
NOTARY PUBLIC
RESIDING IN _____ COUNTY

LIMITED LIABILITY COMPANY ACKNOWLEDGMENT

STATE OF UTAH
COUNTY OF
|S.S.
On the _____ day of _____A.D., 20____ personally appeared before me, the undersigned Notary Public, in and for said County of _____ in the State of_____, who after being duly sworn, acknowledged to me that _____ that_____signed the Owner's Dedication freely and voluntarily for and in behalf of said Limited Liability Company for the purposes therein mentioned.

MY COMMISSION EXPIRES _____
NOTARY PUBLIC
RESIDING IN _____ COUNTY

FORT HERRIMAN COVE PHASE 3 SUBDIVISION

LOCATED IN THE NORTHWEST QUARTER OF SECTION 11, TOWNSHIP 4 SOUTH, RANGE 2 WEST, SALT LAKE BASE & MERIDIAN HERRIMAN, SALT LAKE COUNTY, UTAH

RECORDED # 10530080
STATE OF UTAH, COUNTY OF SALT LAKE, RECORDED AND FILED AT THE REQUEST OF: Builders Development Group
DATE: 9/29/08 TIME: 2:48 PM BOOK: 2008P PAGE: 252
$54.00
FEE$
Lanny Johnson, Deputy
DEPUTY SALT LAKE COUNTY RECORDER

Current plat

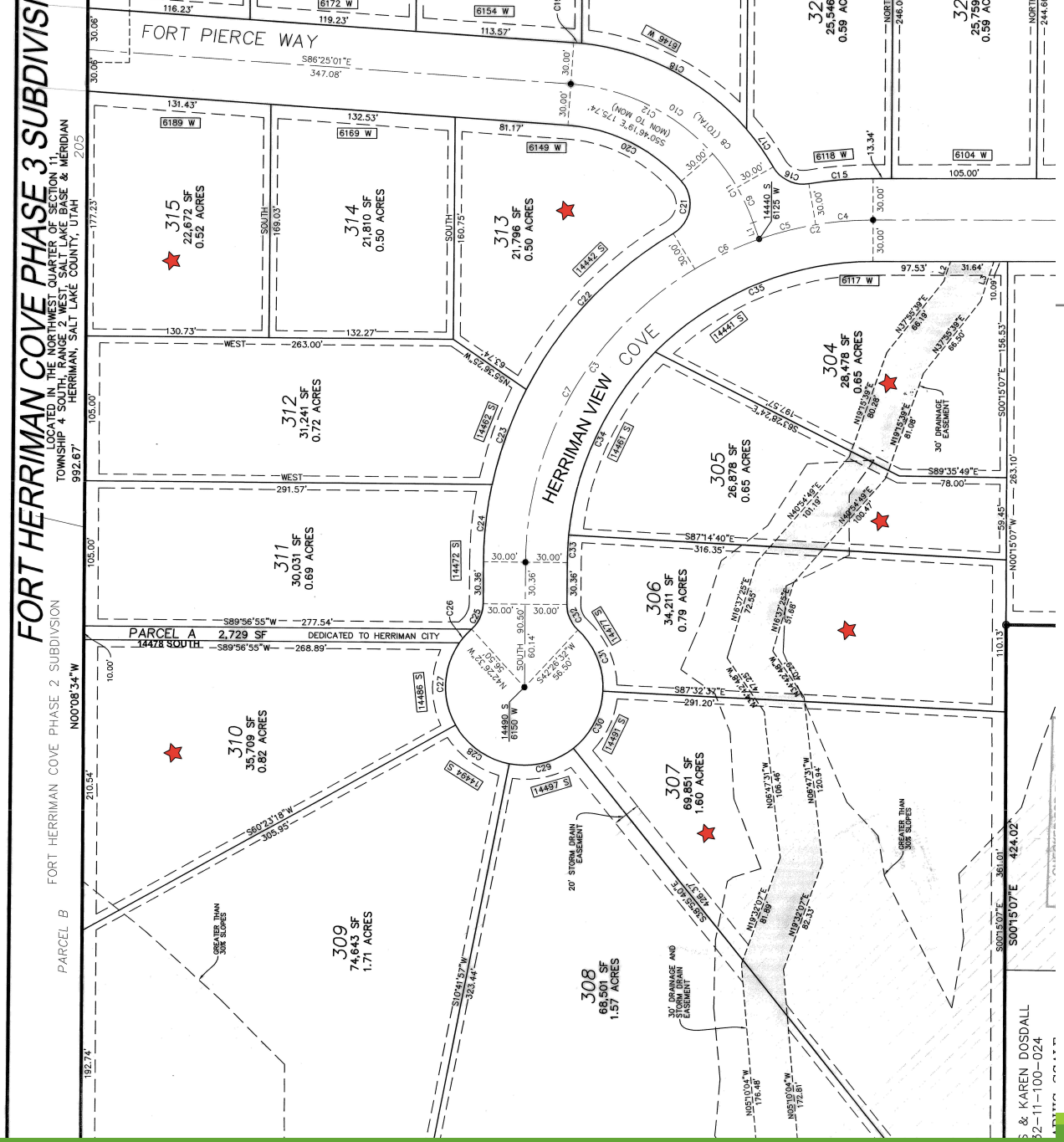

Proposed Plat

FORT HERRIMAN COVE PHASE 3 LOTS 310 AND 311 AMENDED SUBDIVISION

AMENDING LOTS 310 AND 311, AND ALSO PARCEL A OF FORT HERRIMAN COVE PHASE 3 SUBDIVISION

LOCATED IN THE NORTHWEST QUARTER OF SECTION 11,
TOWNSHIP 4 SOUTH, RANGE 2 WEST, SALT LAKE BASE & MERIDIAN
HERRIMAN CITY, SALT LAKE COUNTY, UTAH

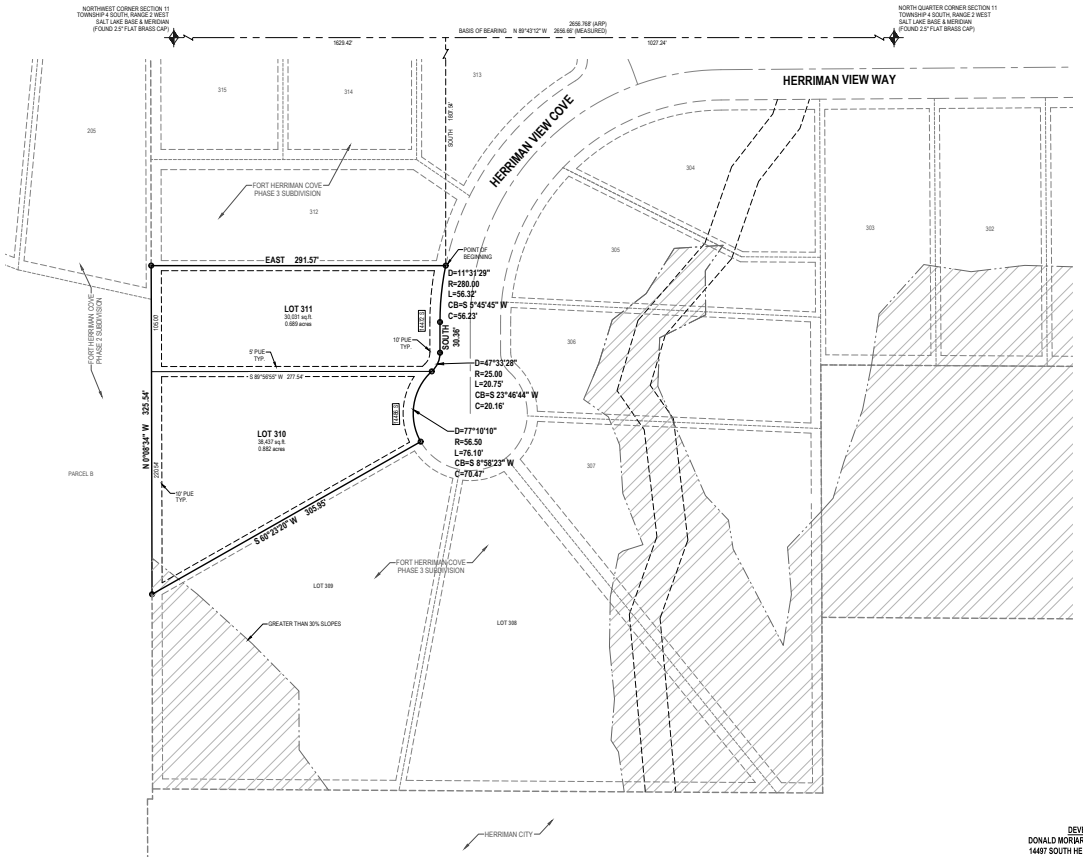

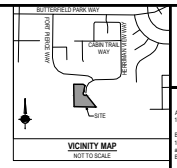

VICINITY MAP
NOT TO SCALE

LEGEND

- EXISTING STREET MONUMENT
- SECTION CORNER
- SET 5/8" REBAR WITH YELLOW PLASTIC CAP, OR NAIL STAMPED "ENSIGN ENG. & LAND SURV."
- BOUNDARY LINE
- SECTION LINE
- CENTER LINE
- EASEMENT LINE
- GREATER THAN 30% SLOPES NON-BUILDABLE AREA (NOT FOR CONSTRUCTION)

NOTE:
SHALLOW SEWER DEPTHS! CONTRACTOR SHALL VERIFY SEWER LATERAL DEPTH AND SET FOUNDATION ELEVATION TO PROVIDE ADEQUATE FALL INTO SEWER LATERAL. BUILDING(S) WITH A BASEMENT MAY NOT HAVE SEWER SERVICE AVAILABLE FOR BASEMENT.

DEVELOPER
DONALD MORIARTY & LACEY BOYCE
14497 SOUTH HERRIMAN VIEW COVE
HERRIMAN, UTAH 84096

HORIZONTAL GRAPHIC SCALE
50 0 25 50 100
(IN FEET)
HORIZ: 1 inch = 50 ft.

ROCKY MOUNTAIN POWER NOTES:
1. PURSUANT TO UTAH CODE ANN. § 54-3-27 THIS PLAT CONVEYS TO THE OWNER(S) OR OPERATORS OF UTILITY FACILITIES A PUBLIC UTILITY EASEMENT ALONG WITH ALL THE RIGHTS AND DUTIES DESCRIBED THEREIN.
2. PURSUANT TO UTAH CODE ANN. § 17-27A-603(4)(C)(ii) ROCKY MOUNTAIN POWER ACCEPTS DELIVERY OF THE PUE AS DESCRIBED IN THIS PLAT AND APPROVES THIS PLAT SOLELY FOR THE PURPOSE OF CONFIRMING THAT THE PLAT CONTAINS PUBLIC UTILITY EASEMENTS AND APPROXIMATES THE LOCATION OF THE PUBLIC UTILITY EASEMENTS, BUT DOES NOT WARRANT THEIR PRECISE LOCATION. ROCKY MOUNTAIN POWER MAY REQUIRE OTHER EASEMENTS IN ORDER TO SERVE THIS DEVELOPMENT. THIS APPROVAL DOES NOT AFFECT ANY RIGHT THAT ROCKY MOUNTAIN POWER HAS UNDER:
   2.1. A RECORDED EASEMENT OR RIGHT-OF WAY
   2.2. THE LAW APPLICABLE TO PRESCRIPTIVE RIGHTS
   2.3. TITLE 54, CHAPTER 8A, DAMAGE TO UNDERGROUND UTILITY FACILITIES OR
   2.4. ANY OTHER PROVISION OF LAW

Dominion Energy Utah - Note:
Questar Gas Company dba Dominion Energy Utah, approves this plat for the purpose of approximating the location, boundaries, course and dimensions of the Rights-of-Way and Easement Grants and existing underground facilities. Nothing herein shall be constructed to warrant or verify the precise location of such items. The Rights-of-Way and easements are subject to numerous restrictions appearing on the recorded right-of-way and easement grant(s). Dominion Energy Utah also approves this plat for the purpose of confirming that the plat contains public utility easements; however, Dominion Energy Utah may require additional easements in order to serve this development. This approval does not constitute abrogation or waiver of any other existing rights, obligations or liabilities provided by law or equity. This approval does not constitute a guarantee that the easements shown will be free from conflict in the plat, including those set in the Owners Dedication or the Notes, and does not constitute a guarantee of particular terms or conditions of natural gas service. for further information please contact Dominion Energy Utah's Right-of-Way Department at 801-324-5522.

SURVEYOR'S CERTIFICATE

I, PATRICK M. HARRIS do hereby certify that I am a Licensed Land Surveyor, and that I hold Certificate No. 289582 as prescribed under laws of the State of Utah. I further certify that by authority of the Owners, I have made a survey of the tract of land shown on this plat and described below, and have subdivided said tract of land into lots and streets, hereafter to be known as FORT HERRIMAN COVE PHASE 3 LOTS 310 AND 311 AMENDED SUBDIVISION and that the same has been correctly surveyed and staked on the ground as shown on this plat. I further certify that all lots meet frontage width and area requirements of the applicable zoning ordinances.

BOUNDARY DESCRIPTION

All of Lots 310 and 311 and also Parcel A of Fort Herriman Cove Phase 3 Subdivision, recorded September 29, 2008 as Entry No. 10530080 in Book 2009P at Page 252 in the Office of the Salt County Recorder, being more particularly described as follows:

Beginning at the Southeast Corner of Lot 312 of Fort Herriman Cove Phase 3 Subdivision, recorded September 29, 2008 as Entry No. 10530080 in Book 2009P at Page 252 in the Office of the Salt County Recorder, said point being North 89°43'12" West 1,027.24 feet along the section line and South 1,807.54 feet from the North Quarter Corner of Section 11, Township 4 South, Range 2 West, Salt Lake Base and Meridian; and running

thence Southwesterly 56.32 feet along the arc of a 280.00 foot radius curve to the left (center bears South 76°28'31" East and the chord bears South 05°45'45" West 56.23 feet with a central angle of 11°31'29");
thence South 30.36 feet;
thence Southwesterly 20.75 feet along the arc of a 25.00 foot radius curve to the right (center bears West and the chord bears South 23°46'44" West 20.16 feet with a central angle of 47°33'28");
thence Southwesterly 76.10 feet along the arc of a 56.50 foot radius curve to the left (center bears South 42°26'32" East and the chord bears South 08°58'23" West 70.47 feet with a central angle of 77°10'10");
thence South 60°23'25" West 305.95 feet;
thence North 00°08'34" West 325.54 feet;
thence East 291.57 feet to the point of beginning.

Contains 68,468 Square Feet or 1.572 Acres and 2 Lots

DATE — PATRICK M. HARRIS, LICENSE No. 289582

OWNER'S DEDICATION

Known all men by these presents that I / we, the undersigned owner (s) of the above described tract of land, having caused same to be subdivided into lots, streets and easements, hereafter known as the

FORT HERRIMAN COVE PHASE 3
LOTS 310 AND 311 AMENDED SUBDIVISION

do hereby dedicate for perpetual use of the public all parcels of land shown on this plat as intended for Public use. Owner(s) hereby agree to warrant and defend and save the City harmless against any easements or other encumbrance on a dedicated street which will interfere with the City's use, maintenance, and operation of the street.

In witness whereof I / we have hereunto set our hand (s) this _____ day of _____ A.D., 20_____

By: Donald Moriarty

By: Lacey Boyce

By: Herriman City

INDIVIDUAL ACKNOWLEDGMENT

STATE OF UTAH
COUNTY OF _____ ; S.S.

ON THIS ____ DAY OF _____ IN THE YEAR 20 ___ BEFORE ME _____
PERSONALLY APPEARED
_____ THE SIGNER(S) OF THE FOREGOING INSTRUMENT WHO DULY ACKNOWLEDGED TO ME THAT HE/SHE/THEY EXECUTED THE SAME.

NOTARY SIGNATURE

MY COMMISSION EXPIRES: _____
RESIDING IN _____ COUNTY.

MUNICIPAL ACKNOWLEDGMENT

STATE OF UTAH
COUNTY OF SALT LAKE ; S.S.

ON THE ____ DAY OF _____ IN THE YEAR 20 ___ BEFORE ME _____, THE SIGNER OF THE FOREGOING INSTRUMENT, WHO DULY ACKNOWLEDGED TO ME THAT HE/SHE IS THE _____ OF _____ AND IS AUTHORIZED TO EXECUTE THE FOREGOING AGREEMENT IN ITS BEHALF AND THAT HE/SHE EXECUTED IT IN SUCH CAPACITY.

NOTARY SIGNATURE

MY COMMISSION EXPIRES: _____
RESIDING IN _____ COUNTY.

TABULATIONS	
TOTAL PLAT ACREAGE	1.572 ACRES
TOTAL LOT ACREAGE	1.572 ACRES
TOTAL ACREAGE IN PUBLIC STREET	0.000 ACRES
TOTAL ACREAGE IN OPEN SPACE	0.000 ACRES
NUMBER OF LOTS	2

SOUTH VALLEY SEWER DISTRICT
APPROVED THIS _____ DAY OF _____ 20_____ BY THE SOUTH VALLEY SEWER DISTRICT.
SOUTH VALLEY SEWER DISTRICT MANAGER

HEALTH DEPARTMENT APPROVAL
APPROVED THIS _____ DAY OF _____ 20_____ BY THE HEALTH DEPARTMENT.
DIRECTOR, SALT LAKE COUNTY HEALTH DEPARTMENT

CENTURYLINK COMMUNICATIONS
APPROVED THIS _____ DAY OF _____ 20_____ BY THE CENTURYLINK.
CENTURYLINK COMMUNICATIONS

COMCAST
APPROVED THIS _____ DAY OF _____ 20_____ BY THE COMCAST.
COMCAST

ROCKY MOUNTAIN POWER
APPROVED THIS _____ DAY OF _____ 20_____ BY THE ROCKY MOUNTAIN POWER.
ROCKY MOUNTAIN POWER

DOMINION ENERGY
APPROVED THIS _____ DAY OF _____ 20_____ BY THE DOMINION ENERGY
DOMINION ENERGY

CHECKED FOR ZONING
ZONE: _____ DATE: _____
AREA: _____ WIDTH: _____
NAME: _____

PLANNING COMMISSION APPROVAL
APPROVED THIS _____ DAY OF _____ 20_____ BY THE HERRIMAN PLANNING COMMISSION.
CHAIR, HERRIMAN PLANNING COMMISSION

HERRIMAN CITY MUNICIPAL WATER
APPROVED THIS _____ DAY OF _____ 20_____ BY THE HERRIMAN CITY MUNICIPAL WATER.
HERRIMAN CITY

HERRIMAN CITY ENGINEER
I HEREBY CERTIFY THAT THIS OFFICE HAS EXAMINED THIS PLAT AND IT IS CORRECT IN ACCORDANCE WITH INFORMATION ON FILE IN THIS OFFICE
DATE — HERRIMAN CITY ENGINEER

APPROVAL AS TO FORM
APPROVED AS TO FORM THIS _____ DAY OF _____ 20_____
HERRIMAN CITY ATTORNEY

HERRIMAN CITY
APPROVED THIS _____ DAY OF _____ 20_____ BY THE HERRIMAN CITY.
ATTEST: RECORDER — PLANNING DIRECTOR

ENSIGN
SALT LAKE CITY
45 W. 10000 S., Suite 500
Sandy, UT 84070
Phone: 801.255.0529
Fax: 801.255.4449
WWW.ENSIGNENG.COM
LAYTON Phone:801.547.1100
TOOELE Phone: 435.833.0910
CEDAR CITY Phone: 435.865.1453
RICHFIELD Phone: 435.896.2983

SHEET 1 OF 1
PROJECT NUMBER : 41680
MANAGER : JKF
DRAWN BY : NRW
CHECKED BY : PMH
DATE : 7/1/20

FORT HERRIMAN COVE PHASE 3
LOTS 310 AND 311 AMENDED SUBDIVISION
AMENDING LOTS 310 AND 311, AND ALSO PARCEL A OF FORT HERRIMAN COVE PHASE 3 SUBDIVISION
LOCATED IN THE NORTHWEST QUARTER OF SECTION 11,
TOWNSHIP 4 SOUTH, RANGE 2 WEST, SALT LAKE BASE & MERIDIAN
HERRIMAN CITY, SALT LAKE COUNTY, UTAH

RECORDED #: _____
STATE OF UTAH, COUNTY OF SALT LAKE, RECORDED AND FILED AT THE
REQUEST OF: _____
DATE: _____ TIME: _____ BOOK: _____ PAGE: _____
FEES — DEPUTY SALT LAKE COUNTY RECORDER