Tweedle Dee Chords

RealGuitarSuccess.com

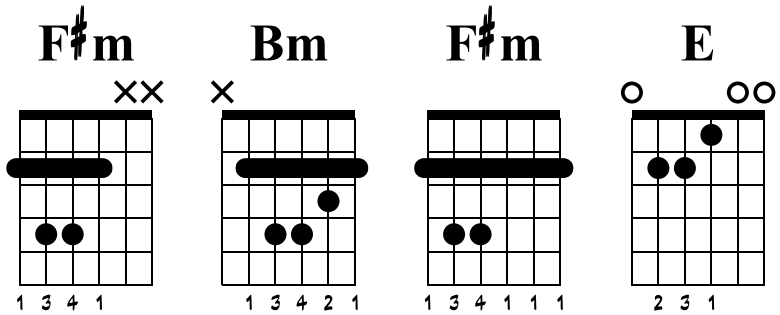

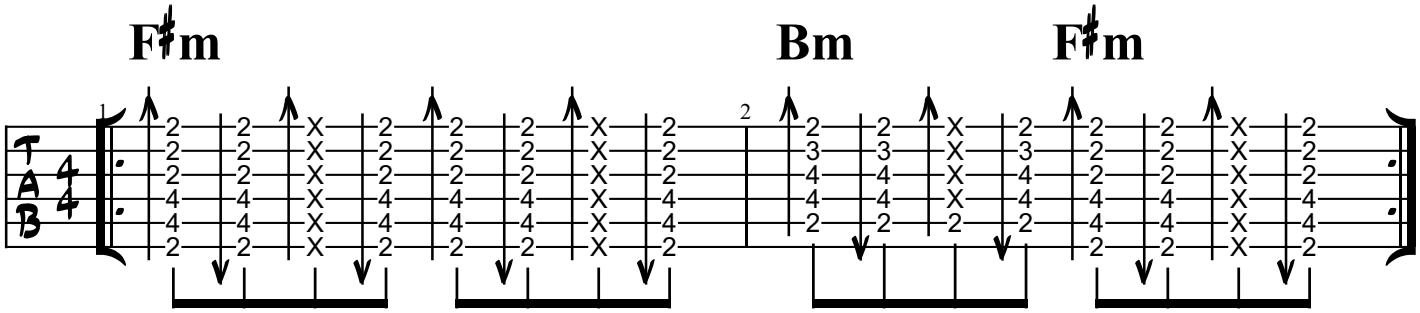

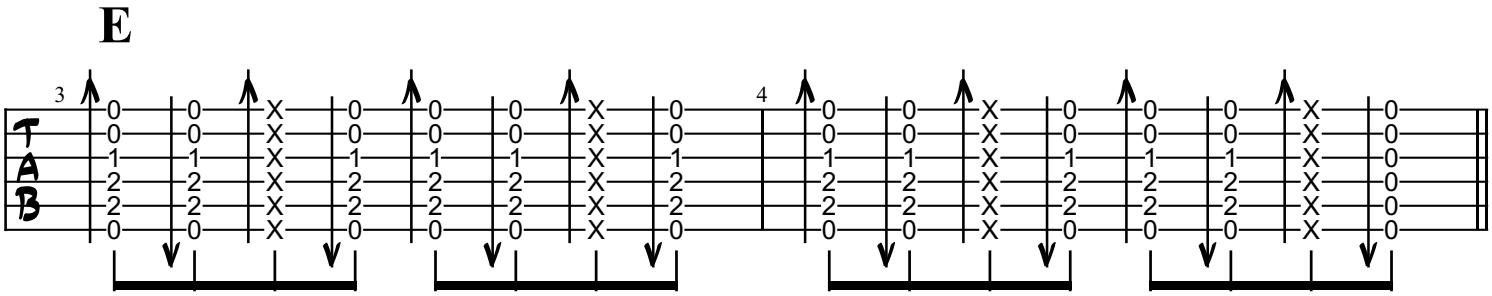

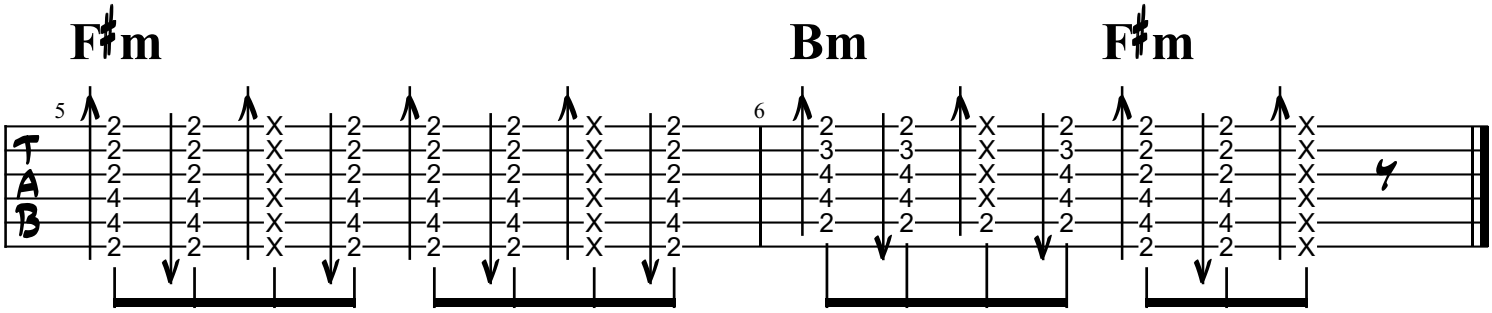

Tomas Michaud. All Rights Reserved.
All Rights Reserved - International Copyright Secured