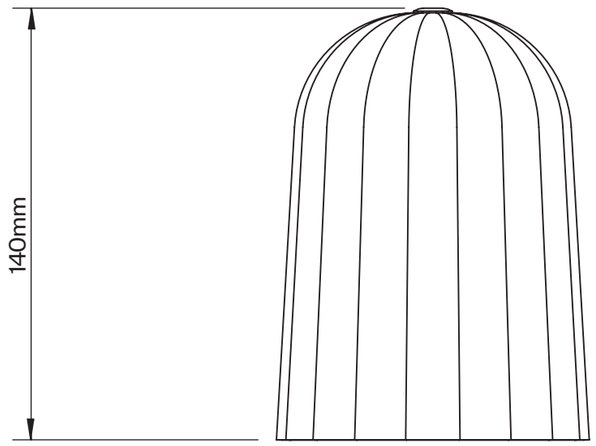

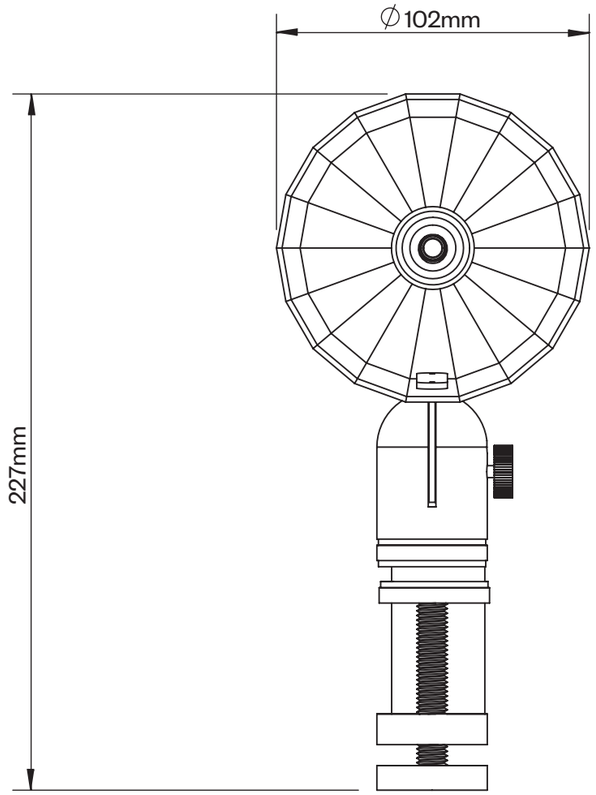

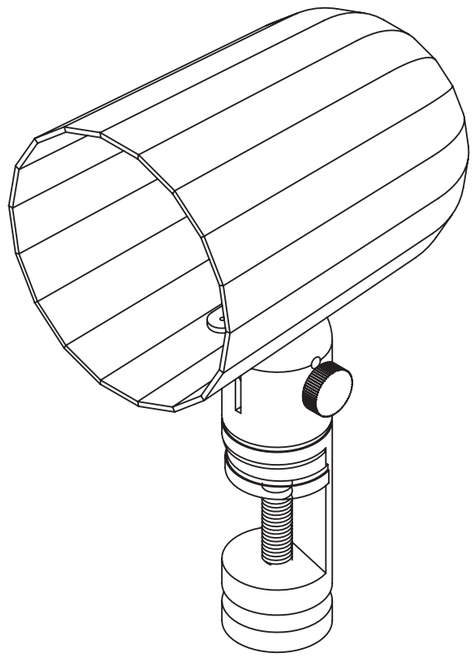

Noc 01/11/16
A3 Scale 1:2

wrong.london